NAPA VALLEY COLLEGE
WINE EDUCATION CENTER

2277 NAPA VALLEJO HWY
NAPA, CA 94558

DSA Application # 01-120890   File # 28-C1

ABBREVIATIONS

CFCI - CONTRACTOR FURNISH CONTRACTOR INSTALL
CFOI - CONTRACTOR FURNISH OWNER INSTALL
OFCI - OWNER FURNISH CONTRACTOR INSTALL
OFOI - OWNER FURNISH OWNER INSTALL

A/C - AIR CONDITIONING
AB - ANCHOR BOLT
AC - ASPHALT CONCRETE
ACC - ACCESSIBLE
ACOUS - ACOUSTIC
ACP - ASPHALT CONCRETE PAVING
ACT - ACOUSTICAL CEILING TILE
AD - AREA DRAIN
ADA - AMERICANS W/ DISABILITIES ACT
ADJ - ADJUSTABLE
AFF - ABOVE FINISHED FLOOR
AGG - AGGREGATE
AHJ - AUTHORITY HAVING JURISDICTION
ALT - ALTERNATE
ALUM - ALUMINUM
APPROX - APPROXIMATE
ARCH - ARCHITECT
ASPH - ASPHALT

BD - BOARD
BFC - BELOW FINISHED CEILING
BFD - BACK FLOW DEVICE
BITUM - BITUMINOUS
BLD - BOLLARD
BLDG - BUILDING
BLK - BLOCK
BLKG - BLOCKING
BM - BEAM
BOT - BOTTOM
BRG - BEARING
BRK - BRICK
BRZ - BRONZE
BTWN - BETWEEN
BUR - BUILT-UP ROOFING

C - COMPACT
CAB - CABINET
CB - CATCH BASIN
CEM - CEMENT
CERT - CERAMIC TILE
CH - CHASE
CI - CAST IRON
CIR - CIRCLE
CJ - CONSTRUCTION JOINT
CLG - CEILING
CLGJ - CEILING JOIST
CLKG - CAULKING
CLO - CLOSET
CLR - CLEAR
CLRSTY - CLERESTORY
CLS - CLOSURE
CMU - CONCRETE MASONRY UNIT
CNTR - COUNTER
CO - CLEAN OUT
COL - COLUMN
COMB - COMBINATION
COMP - COMPOSITION
CONC - CONCRETE
CONN - CONNECTION
CONST - CONSTRUCTION
CONT - CONTINUOUS
COR - CORRIDOR
CP - CEMENT PLASTER
CPT - CARPET
CPTT - CARPET TILE
CRKT - CRICKET
CTR - CENTER
CW - COLD WATER

D - DRAIN
DBL - DOUBLE
DCA - DOUBLE CHECK VALVE ASSEMBLY
DEMO - DEMOLISH
DEPT - DEPARTMENT
DF - DOUGLAS FIR
DIA - DIAMETER
DIAG - DIAGONAL
DIM - DIMENSION
DISP - DISPOSAL
DIV - DIVISION
DN - DOWN
DO - DOOR OPENING
DR - DOOR
DRF - DRINKING FOUNTAIN
DRWR - DRAWER
DS - DOWN SPOUT
DT - DRAIN TILE
DTL - DETAIL
DW - DISHWASHER
DWS - DETECTABLE WARNING STRIP

(E) - EXISTING
E - EAST
EA - EACH
EB - EXPANSION BOLT
EE - EACH END
EF - EXHAUST FAN
EJ - EXPANSION JOINT
ELEC - ELECTRICAL
ELEV - ELEVATION
EN - EDGE NAIL
ENCL - ENCLOSURE
EP - EDGE OF PAVEMENT
EQ - EQUAL
EQUIV - EQUIVALENT
ES - EACH SIDE
EVA - EMERGENCY VEHICLE ACCESS
EW - EACH WAY
EX - EXIT
EXP - EXPANSION
EXPO - EXPOSURE
EXT - EXTERIOR
EXTN - EXTENSION

F - FACE
FA - FIRE ALARM
FB - FACE BRICK
FBD - FIBERBOARD
FBELL - FIRE BELL
FBO - FURNISHED BY OTHER
FCP - FIBER CEMENT PANEL
FD - FLOOR DRAIN
FDC - FIRE DEPARTMENT CONNECTION
FDN - FOUNDATION
FE - FIRE EXTINQUISHER
FEC - FIRE EXTINQUISHER CABINET
FF - FINISH FLOOR
FG - FINISH GRADE
FGL - FIBERGLASS
FH - FIRE HYDRANT
FHMS - FLAT HEAD MACHINE SCREW
FHORN - FIRE HORN
FHS - FIRE HOSE STATION
FHWS - FLAT HEAD WOOD SCREW
FIN - FINISH
FIXT - FIXTURE
FJ - FLOOR JOIST
FLR - FLOOR
FLSH - FLASHING
FN - FACE NAIL
FNC - FENCE
FOB - FACE OF BUILDING
FOC - FACE OF CONCRETE
FOF - FACE OF FINISH
FOM - FACE OF MASONRY
FOS - FACE OF STUD
FR - FIRE RETARDANT
FTG - FOOTING
FUT - FUTURE

GA - GAUGE
GALV - GALVANIZED
GB - GRAB BAR
GD - GARBAGE DISPOSAL
GE - GRATE ELEVATION
GL - GLASS
GLB - GLUE LAMINATED BEAM
GND - GROUND
GR - GRADE
GSM - GALVANIZED SHEET METAL
GYP BD - GYPSUM BOARD

HB - HOSE BIB
HC - HOLLOW CORE
HDR - HEADER
HDWD - HARDWOOD
HDWE - HARDWARE
HGT - HEIGHT
HM - HOLLOW METAL
HORZ - HORIZONTAL
HP - HIGH POINT
HR - HOUR
HSS - HOLLOW STRUCTURAL STEEL
HTG - HEATING
HVAC - HEATING, VENTILATION & AIR CONDITIONING
HW - HOT WATER

ID - INSIDE DIAMETER
INSUL - INSULATION
INT - INTERIOR
INV - INVERT
IRR - IRRIGATION

JAN - JANITOR
JH - JOIST HANGER
JST - JOIST
JT - JOINT

KIT - KITCHEN

LAB - LABORATORY
LAM - LAMINATE
LAV - LAVATORY
LB - LAG BOLT
LH - LEFT HAND
LL - LIVE LOAD
LN - LENGTH
LP - LOW POINT
LSL - LAMINATED STRAND LUMBER
LT - LIGHT
LTG - LIGHTING
LVR - LOUVER
LW - LIGHTWEIGHT

MAT - MATERIAL
MAX - MAXIMUM
MB - MACHINE BOLT
MC - MEDICINE CABINET
MECH - MECHANICAL
MED - MEDIUM
MFR - MANUFACTURER
MH - MANHOLE
MIN - MINIMUM
MIR - MIRROR
MISC - MISCELLANEOUS
MO - MASONRY OPENING
MOD - MODULAR
MR - MOISTURE RESISTANT
MTD - MOUNTED
MTL - METAL

(N) - NEW
N - NORTH
NAT - NATURAL
NIC - NOT IN CONTRACT
NO - NUMBER
NOM - NOMINAL
NR - NON-RATED
NTS - NOT TO SCALE

O/ - OVER
OA - OVERALL
OBS - OBSCURE
OC - ON CENTER
OD - OUTSIDE DIAMETER
OFD - OVERFLOW DRAIN
OFF - OFFICE
OFS - OUTSIDE FACE OF STUD
OHWS - OVAL HEAD WOOD SCREW
OPP - OPPOSITE
OVFL - OVERFLOW

P - PAINT
PCF - POUNDS PER CUBIC FOOT
PEN - PANEL EDGE NAIL
PERF - PERFORATED
PIR - POLYISOCYNURATE
PIV - POST INDICATOR VALVE
PL - PLATE
PLAM - PLASTIC LAMINATE
PLAS - PLASTER
PLF - POUNDS PER LINEAR FOOT
PLNT - PLANTER
PLWD - PLYWOOD
PMF - PRESSED METAL FRAME
PR - PAIR
PROP - PROPERTY
PRPT - PARAPET
PSF - POUNDS PER SQUARE FOOT
PSI - POUNDS PER SQUARE INCH
PSL - PARALLEL STRAND LUMBER
PSTA - PULL STATION
PT - POINT
PTD - PAPER TOWEL DISPENSER
PTDF - PRESSURE TREATED DOUGLAS FIR
PTN - PARTITION
PTR - PAPER TOWER RECEPTACLE
PUR - POLYURETHANE
PVC - POLYVINYL-CHLORIDE
PVMT - PAVEMENT

QT - QUARRY TILE

RAD - RADIUS
RAH - ROOF ACCESS HATCH
RB - RESILIENT BASE
RCP - REFLECTED CEILING PLAN
RD - ROOF DRAIN
RDWD - REDWOOD
REF - REFERENCE
REFR - REFRIGERATOR
REINF - REINFORCING
RES - RESILIENT
RGD - RIGID
RH - RIGHT HAND
RHMS - ROUND HEAD METAL SCREW
RHWS - ROUND HEAD WOOD SCREW
RO - ROUGH OPENING
RW - ROCK WOOL
RWL - RAIN WATER LEADER

S - SOUTH
SAB - SOUND ATTENUATING BATTS
SAD - SEE ARCHITECTURAL DRAWINGS
SAFF - SELF ADHERED FLEXIBLE FLASHING
SASM - SELF ADHERED SHEET MEMBRANE
SBLKG - SOLID BLOCKING
SC - SOLID CORE
SCD - SEE CIVIL DRAWINGS
SD - STORM DRAIN
SDISP - SOAP DISPENSER
SEAL - SEALANT
SECT - SECTION
SED - SEE ELECTRICAL DRAWINGS
SF - SQUARE FOOT (FEET)
SHR - SHOWER
SHT - SHEET
SHTF - SHEET FLOW
SHTG - SHEATHING
SIM - SIMILAR
SING - SINGLE
SL - SLIDING
SLD - SEE LANDSCAPE DRAWINGS
SLP - SLOPE
SMD - SEE MECHANICAL DRAWINGS
SMS - SHEET METAL SCREW
SOG - SLAB ON GRADE
SP - SOUNDPROOF
SPEC - SPECIFICATION
SQ - SQUARE
SS - SANITARY SEWER
SSD - SEE STRUCTURAL DRAWINGS
SSTL - STAINLESS STEEL
STA - STATION
STD - STANDARD
STL - STEEL
STO - STORAGE
STRUC - STRUCTURAL
STS SELF-TAPPING SCREW
SUSP - SUSPENDED

T&B - TOP AND BOTTOM
T&G - TONGUE & GROOVE
TEL - TELEPHONE
TEMP - TEMPERED
TER - TERRAZZO
THK - THICK
TJ - TOOL JOINT
TKBD - TACKBOARD
TN - TOE NAIL
TO TOP OF
TOC - TOP OF CURB
TOPL - TOP OF PLATE
TOPVMT - TOP OF PAVEMENT
TOS - TOP OF STEEL
TOSOG - TOP OF SLAB ON GRADE
TOW - TOP OF WALL
TPD - TOILET PAPER DISPENSER
TPO - THERMOPLASTIC POLYOLEFIN
TRN - TRANSOM
TS - TUBE STEEL
TV - TELEVISION
TYP - TYPICAL

UNF - UNFINISHED
UON - UNLESS OTHERWISE NOTED
UR - URINAL

VCT - VINYL COMPOSITION TILE
VERT - VERTICAL
VEST - VESTIBULE
VG - VERTICAL GRAIN
VIF - VERIFY IN FIELD
VT - VINYL TILE
VTR - VENT TO ROOF
VWC - VINYL WALL COVERING

W - WEST
W/ - WITH
W/O - WITHOUT
WAB - WATER RESISTIVE BARRIER
WC - WATER CLOSET
WD - WOOD
WDW - WINDOW
WF - WASH FOUNTAIN
WH - WATER HEATER
WP - WATER PROOF
WR - WATER RESISTANT
WRB - WATER RESISTIVE BARRIER
WT - WEIGHT
WWF - WELDED WIRE FABRIC

XFMR - TRANSFORMER

YD - YARD

SYMBOLS

1 / A — GRID LINE INDICATION: FACE OF; CENTER OF

EXAM ROOM / 101 — ROOM IDENTIFICATION: ROOM NAME; ROOM NUMBER

CHSM — FURNITURE / EQUIPMENT IDENTIFICATION: FURNITURE / EQUIPMENT CODE

KEYNOTE & DRAWING NOTE IDENTIFICATION:
10 44 13 — REFERENCE KEYNOTE - SEE SCHEDULE ON SHEETS & SPECIFICATIONS
.013 — DRAWING NOTE - SEE SCHEDULE ON SHEETS

1, 2, 3, 4, A-251 — ELEVATION: ELEVATION VIEW NUMBER; ELEVATION SHEET

A / A-301 — SECTION: SECTION NUMBER; SECTION SHEET

23 / A-511 — DETAIL: DETAIL NUMBER; DETAIL SHEET

101A — DOOR NUMBER: BY ROOM NUMBER - REFER TO DOOR SCHEDULE

6A — PARTITION TYPE INDICATOR: REFER TO PARTITION LEGEND

WORK POINT: (CONTROL or DATUM POINT)

P1 — FINISH INDICATOR: FINISH CODE

B — STOREFRONT / CURTAIN WALL TYPE INDICATOR: REFER TO STOREFRONT / CURTAIN WALL TYPES

DIMENSIONS:
6" — STANDARD DIMENSION - FACE OF STUD WHERE APPLIED TO WALLS OR PARTITIONS, UNO
6" — FINISH TO FINISH DIMENSION - FACE OF GYP, OR DIMENSIONAL FINISH WHERE APPLIED TO WALLS OR PARTITIONS, UNO

" — INCHES
' — FEET
% — PERCENT
& — AND
+/- — PLUS OR MINUS
— NUMBER
@ — AT
> — GREATER THAN
< — LESS THAN
Ø — DIAMETER
° — DEGREE
∟ — ANGLE
℄ — CENTERLINE
PL — PROPERTY LINE
FL — FLOOR LINE

APPLICABLE CODES

BUILDING CODES AND STANDARDS as of January 1, 2023*

2022 CALIFORNIA ADMINISTRATIVE CODE (CAC), PART 1, TITLE 24 CCR*

2022 CALIFORNIA BUILDING CODE (CBC), PART 2, TITLE 24 CCR
(2021 INTERNATIONAL BUILDING CODE, VOLUMES 1 & 2, AND 2022 CALIFORNIA AMENDMENTS)

2022 CALIFORNIA ELECTRICAL CODE (CEC), PART 3, TITLE 24 CCR
(2020 NATIONAL ELECTRICAL CODE AND 2022 CALIFORNIA AMENDMENTS)

2022 CALIFORNIA MECHANICAL CODE (CMC), PART 4, TITLE 24 CCR
(2021 IAPMO UNIFORM MECHANICAL CODE AND 2022 CALIFORNIA AMENDMENTS)

2022 CALIFORNIA PLUMBING CODE (CPC), PART 5, TITLE 24 CCR
(2021 IAPMO UNIFORM PLUMBING CODE AND 2022 CALIFORNIA AMENDMENTS)

2022 CALIFORNIA ENERGY CODE (CEC), PART 6, TITLE 24 CCR

2022 CALIFORNIA FIRE CODE (CFC), PART 9, TITLE 24 CCR
(2021 INTERNATIONAL FIRE CODE AND 2022 CALIFORNIA AMENDMENTS)

2022 CALIFORNIA GREEN BUILDING STANDARDS CODE (CALGreen), PART 11, TITLE 24 CCR

2022 CALIFORNIA REFERENCE STANDARDS CODE, PART 12, TITLE 24 CCR

TITLE 19 CCR, PUBLIC SAFETY, STATE FIRE MARSHAL REGULATIONS

NATIONAL REFERENCE STANDARDS

AISC 341-16 - SEISMIC PROVISIONS FOR STRUCTURAL STEEL BUILDINGS

AISC 358 - PREQUALIFIED CONNECTIONS STANDARD

AISC 360-16 - SPECIFICATION FOR STRUCTURAL STEEL BUILIDNGS

ANSI/AWC NDS-2018 - NATIONAL DESIGN SPECIFICATION FOR WOOD CONSTRUCTION WITH 2018 NDS SUPPLEMENT

SDPWS 2021 - SPECIAL DESIGN PROVISIONS FOR WIND AND SEISMIC WITH COMMENTARY

ACI-318-19 - BUILDING CODE REQUIREMENTS FOR STRUCTURAL CONCRETE

ASCE 7-16 - MINIMUM DESIGN LOADS AND ASSOCIATED CRITERIA FOR BUILDINGS AND OTHER STRUCTURES (WITH SUPPLEMENT NO.1, 2, AND 3)

NFPA 04-21 - STANDARD FOR INTEGRATED FIRE PROTECTION AND LIFE SAFETY SYSTEM TESTING

NFPA 10-21 - STANDARD FOR PORTABLE FIRE EXTINGUISHERS

NFPA 13-22 - STANDARD FOR THE INSTALLATION OF FIRE SPRINKLERS (CA AMENDED)

NFPA 14-19 - STANDARD FOR THE INSTALLATION OF STANDPIPE AND HOSE SYSTEMS (CA AMENDED)

NFPA 17-21 - STANDARD FOR DRY CHEMICAL EXTINGUISHING SYSTEMS

NFPA 17A-21 - STANDARD FOR WET CHEMICAL EXTINGUISHING SYSTEMS

NFPA 20-19 - STANDARD FOR THE INSTALLATION OF STATIONARY PUMPS FOR FIRE PROTECTION

NFPA 24-19 - STANDARD FOR THE INSTALLATION OF PRIVATE FIRE SERVICE MAINS AND THEIR APPURTENANCES (CA AMENDED)

NFPA 25-13CA - CALIFORNIA NFPA 25 EDITION (BASED ON THE 2011 EDITION) INSPECTION, TESTING, AND MAINTENANCE OF WATER-BASED FIRE PROTECTION SYSTEMS

NFPA 70-20 - NATIONAL ELECTRICAL CODE

NFPA 72-22 - NATIONAL FIRE ALARM AND SIGNALING CODE (CA AMENDED)

NFPA 80-19 - STANDARD FOR FIRE DOORS AND OTHER OPENING PROTECTIVES

NFPA 92-18 - STANDARD FOR SMOKE CONTROL SYSTEMS

NFPA 101-21 - LIFE SAFETY CODE

NFPA 105-19 - STANDARD FOR SMOKE DOOR ASSEMBLIES AND OTHER OPENING PROTECTIVES

NFPA 110-19 - STANDARD FOR EMERGENCY AND STANDBY POWER SYSTEMS

NFPA 2001-18 - STANDARD ON CLEAN AGENT FIRE EXTINGUISHING SYSTEMS (CA AMENDED)

UL 464-03 - AUDIBLE SIGNALING APPLIANCES - WITH REVISIONS THROUGH OCT 10, 2003

UL 521-99 - HEAT DETECTORS FOR FIRE PROTECTIVE SIGNALING SYSTEMS - WITH REVISIONS THROUGH JULY 20, 2005

UL 1971 - STANDARD FOR SIGNALING DEVICES FOR THE HEARING IMPAIRED - 2002 (R2010)

ADA (AMERICANS WITH DISABILITIES ACT, 1990) 2010 EDITION

ADA STANDARDS FOR ACCESSIBLE DESIGN (APPENDIX A OF 28 CFR PART 36)

SUMMARY OF WORK

DEMOLITION OF TWO EXISTING BUILDINGS (ONE MODULAR, ONE WOOD FRAMED), AND THE CONSTRUCTION OF A NEW BUILDING AND ASSOCIATED SITE WORK INCLUDING A NEW FIRE HYDRANT.
OCCUPANCY: A-3, A-2, B (A OCCUPANCY GOVERNING)
CONSTRUCTION: Type VB
SPRINKLERS: YES
APPROX. 7,812 SQ. FT.

PROJECT TEAM

OWNER
NAPA VALLEY COLLEGE
2277 NAPA-VALLEJO HIGHWAY
NAPA, CA 94558
PHONE: 707.256.7584
CONTACT: SAMANTHA MADDOX

ARCHITECT
TLCD ARCHITECTURE
520 THIRD ST., SUITE #250
SANTA ROSA, CA 95401
PHONE: 707.525.5600
CONTACT: CARL SERVAIS

CIVIL ENGINEER
BRELJE & RACE CONSULTING ENGINEERS
475 AVIATION COULEVARD, SUITE 120
SANTA ROSA, CA 95403
PHONE: 707.636.3731
CONTACT: RYAN D. GLEASON

STRUCTURAL ENGINEER
ZFA STRUCTURAL ENGINEERS
1212 FOURTH ST, SUITE Z
SANTA ROSA, CA 95404
PHONE: 707.526.0992
CONTACT: CHRIS WARNER

MECHANICAL ENGINEER
TEP ENGINEERS
880 SECOND STREET
SANTA ROSA, CA 95404-4610
PHONE: 707.308.4205
CONTACT: TIM SOUZA

ELECTRICAL ENGINEER
O'MAHONY & MYER, INC
4340 REDWOOD HIGHWAY, #245
SAN RAFAEL, CA 94903
PHONE: 415.492-0420
CONTACT: PAUL CAREY

ENERGY
SOLDATA ENERGY CONSULTING, INC
2227 CAPRICORN WAY, SUITE 202
SANTA ROSA, CA 95407
PHONE: 707.545.4440
CONTACT: SEAN PLIKUHN

LANDSCAPE ARCHITECT
RHAA LANDSCAPE ARCHITECTURE & PLANNING
225 MILLER AVE
MILL VALLEY, CA 94941
PHONE: 415.383.7900
CONTACT: BARBARA LUNDBERG

AUDIO-VISUAL
SALTER
130 SUTTER STREET, FLOOR 5
SAN FRANCISCO, CA 94104
PHONE: 415.470.5436
CONTACT: KEN GRAVEN

DEFERRED APPROVAL ITEMS:

1. CURTAIN WALL SYSTEMS
2. SLIDING GLASS WALL UNITS

FABRICATION AND INSTALLATION OF DEFERRED SUBMITTAL ITEMS SHALL NOT BE STARTED UNTIL CONTRACTOR'S DRAWINGS, SPECIFICATIONS, AND ENGINEERING CALCULATIONS FOR THE ACTUAL SYSTEMS TO BE INSTALLED HAVE BEEN ACCEPTED AND SIGNED BY THE ARCHITECT OR STRUCTURAL ENGINEER AND APPROVED BY THE DSA.

SHEET INDEX

GENERAL
G-001 TITLE SHEET
G-002 CAMPUS PLAN - CODE ANALYSIS
G-003 PARTIAL SITE PLAN - CODE ANALYSIS
G-004 BUILDING CODE ANALYSIS
G-005 TITLE 24 ENERGY COMPLIANCE
G-006 TITLE 24 ENERGY COMPLIANCE
G-007 TITLE 24 ENERGY COMPLIANCE
G-008 TITLE 24 ENERGY COMPLIANCE
G-009 CALGREEN MANDATORY MEASURES

CIVIL
C-001 ABBREVIATIONS, LEGEND & NOTES
C-002 PHASE 1 DEMOLITION PLAN
C-100 PHASE 1 GRADING PLAN
C-101 PHASE 2 GRADING PLAN
C-102 PHASE 1 UTILITY PLAN
C-103 PHASE 1 UTILITY PLAN FIRE LINE
C-104 PHASE 2 UTILITY PLAN
C-201 PHASE 1 PAVEMENT STRUCTURAL SECTION & EROSION CONTROL PLAN
C-202 PHASE 2 PAVEMENT STRUCTURAL SECTION & EROSION CONTROL PLAN
C-203 PHASE 1 LAYOUT PLAN
C-204 PHASE 2 LAYOUT PLAN
C-501 DETAILS
C-502 DETAILS
C-503 DETAILS

LANDSCAPE
L-101 TREE PRESERVATION PLAN - PHASE 1
L-102 TREE PRESERVATION PLAN - PHASE 2
L-201 CONSTRUCTION PLAN
L-202 CONSTRUCTION DETAILS
L-203 CONSTRUCTION DETAILS
L-204 CONSTRUCTION DETAILS
L-301 LAYOUT PLAN
L-400 IRRIGATION NOTES AND LEGENDS
L-401 IRRIGATION PLAN
L-402 IRRIGATION DETAILS
L-403 IRRIGATION DETAILS
L-500 PLANTING NOTES AND LEGENDS
L-501 PLANTING PLAN
L-502 PLANTING DETAILS
L-600 SHADE STUDY PLAN

STRUCTURAL
S-001 GENERAL NOTES
S-101 TYPICAL CONCRETE DETAILS
S-102 TYPICAL WOOD DETAILS
S-103 TYPICAL WOOD & I-JOIST DETAILS
S-201 PHASE 1 FOUNDATION & ROOF FRAMING PLANS
S-202 PHASE 2 FOUNDATION & ROOF FRAMING PLANS
S-203 PHASE 1 ENLARGED FOUNDATION PLAN
S-204 PHASE 1 ENLARGED ROOF FRAMING PLAN
S-205 PHASE 2 ENLARGED FOUNDATION PLAN
S-206 PHASE 2 ENLARGED ROOF FRAMING PLAN
S-301 ELEVATIONS
S-302 SCHEMATIC 3D VIEW
S-401 FOUNDATION DETAILS
S-501 STEEL DETAILS
S-601 WOOD DETAILS
S-602 WOOD DETAILS

ARCHITECTURAL
A-101 PARTIAL SITE PLAN - DEMOLITION WORK
A-102 PARTIAL SITE PLAN - PHASE 1
A-103 PARTIAL SITE PLAN - PHASE 2
A-121 FLOOR PLAN, ROOF PLAN - PHASE 1
A-122 FLOOR PLAN, ROOF PLAN - PHASE 2
A-171 REFLECTED CEILING PLANS
A-201 EXTERIOR ELEVATIONS
A-251 INTERIOR ELEVATIONS - PHASE 1
A-252 INTERIOR ELEVATIONS - PHASE 1
A-253 INTERIOR ELEVATIONS - PHASE 2
A-301 BUILDING & WALL SECTIONS
A-401 ENLARGED FLOOR PLAN
A-402 ENLARGED FLOOR PLAN AND INTERIOR ELEVATIONS - RESTROOMS
A-511 DETAILS - ACCESSIBLE
A-521 DETAILS - WALLS AND PARTITIONS
A-522 DETAILS - EXTERIOR
A-523 DETAILS - MISC
A-524 DETAILS - MISC
A-531 DETAILS - ROOF
A-541 DETAILS - OPENINGS
A-561 DETAILS - INTERIOR
A-571 TYP SUSP APC DETAILS
A-572 TYP SUSP APC DETAILS
A-601 ROOM FINISH SCHEDULE, DOOR SCHEDULE, DOOR TYPES & STOREFRONT/CURTAIN WALL TYPES

PLUMBING
P-001 PLUMBING SCHEDULES & NOTES
P-101 PLUMBING SITE COORDINATION PLAN
P-121 PLUMBING PLAN - PHASE 1
P-122 PLUMBING PLAN - PHASE 2
P-301 PLUMBING SECTIONS
P-401 PLUMBING ENLARGED PLAN LOWER - PHASE 1
P-402 PLUMBING ENLARGED PLAN UPPER - PHASE 1
P-403 PLUMBING ENLARGED PLAN LOWER & UPPER - PHASE 2
P-501 PLUMBING DETAILS
P-502 PLUMBING DETAILS
P-503 PLUMBING DETAILS
P-601 PLUMBING DIAGRAMS AND CALCULATIONS

MECHANICAL
M-001 MECHANICAL SCHEDULES & NOTES
M-121 MECHANICAL PLAN - PHASE 1
M-122 MECHANICAL PLAN - PHASE 2
M-301 MECHANICAL SECTIONS
M-401 MECHANICAL ENLARGED PLAN - PHASE 1
M-402 MECHANICAL ENLARGED PLAN - PHASE 2
M-501 MECHANICAL DETAILS
M-502 MECHANICAL DETAILS
M-503 MECHANICAL DETAILS
M-601 MECHANICAL VRF SYSTEM
M-602 MECHANICAL CONTROLS

ELECTRICAL
E-001 GENERAL NOTES, LIST OF DRAWINGS
E-002 ELECTRICAL SYMBOLS LIST
E-003 LUMINAIRE SCHEDULE
E-101 SITE PLAN ELECTRICAL
E-102 PARTIAL SITE PLAN
E-103 PARTIAL SITE PLAN - DEMO
E-104 SITE PLAN - LIGHTING
E-201 FLOOR PLAN LIGHTING - PHASE 1
E-202 FLOOR PLAN LIGHTING - PHASE 2
E-301 FLOOR PLAN POWER & SIGNAL - PHASE 1
E-302 FLOOR PLAN POWER & SIGNAL - PHASE 2
E-303 FLOOR PLANS MP CONNECTIONS - PHASE 1
E-304 FLOOR PLANS MP CONNECTIONS - PHASE 2
E-305 ROOF PLAN - PHOTOVOLTAIC - PHASE 1
E-501 SINGLE LINE DIAGRAMS
E-502 SINGLE LINE DIAGRAMS
E-503 SINGLE LINE DIAGRAMS - ENERGY STORAGE
E-504 PLACARDS & DATA SHEETS
E-505 SINGLE LINE DIAGRAMS
E-601 SCHEDULES
E-701 DETAILS
E-702 DETAILS
E-703 DETAILS
E-704 DETAILS
E-901 DATASHEETS
E-902 DATASHEETS

FIRE ALARM
FE-001 FIRE ALARM EQUIPMENT LIST, GENERAL NOTES & DETAILS
FE-101 SITE PLAN - FIRE ALARM
FE-301 FLOOR PLAN FIRE ALARM - PHASE 1
FE-302 FLOOR PLAN FIRE ALARM - PHASE 2
FE-501 RISER DIAGRAM - FIRE ALARM

FIRE PROTECTION
F-001 FIRE PROTECTION LEGEND, NOTES & DETAILS
F-111 FIRE PROTECTION SITE PLAN
F-121 FIRE PROTECTION PLAN - PHASE 1
F-122 FIRE PROTECTION PLAN - PHASE 2
F-301 FIRE PROTECTION SECTIONS
F-501 FIRE PROTECTION DETAILS
F-502 FIRE PROTECTION DETAILS

AUDIOVISUAL INFRASTRUCTURE
TA-000 ELECTRICAL FOR AUDIOVISUAL NOTES AND LEGENDS
TA-121 LEVEL 1 OVERALL PLAN - PHASE 1
TA-122 LEVEL 1 OVERALL PLAN - PHASE 2
TA-171 LEVEL 1 REFLECTED CEILING PLAN PHASE 1
TA-172 LEVEL 1 REFLECTED CEILING PLAN PHASE 2
TA-201 ELEVATIONS & SECTIONS
TA-501 DETAILS
TA-502 DETAILS
TA-601 AUDIOVISUAL LINE DIAGRAMS

LABORATORY
LF-001 LAB FURNISHINGS / EQUIPMENT, COVER SHEET, ABBREVIATIONS, GENERAL NOTES, FIXTURE TYPES, SCHEDULES & TABLES
LF-401 ENLARGED WINE LAB, LAB PREP FLOOR PLAN
LF-501 INTERIOR ELEVATIONS
LF-901 LAB DETAILS
LF-902 LAB DETAILS
SHEET TOTAL: 153

PROJECT NOTES

2022 CALIFORNIA CODE OF REGULATIONS (CCR), TITLE 24, PART 1 ADMINISTRATIVE CODE REQUIREMENTS, CHAPTER 4 (PARTIAL LISTING ONLY)

1. A COPY OF CALIFORNIA CODE OF REGULATIONS, TITLE 24, PARTS 1 THROUGH 5, SHALL BE KEPT ON THE JOB SITE AT ALL TIMES.
2. ALL CONSTRUCTION CHANGE DOCUMENTS AND ADDENDA TO BE SIGNED BY THE ARCHITECT, STRUCTURAL ENGINEER (WHEN APPLICABLE), DELEGATED PROFESSIONAL ENGINEER, AND OWNER AND APPROVED BY DSA BEFORE PROCEEDING WITH THE WORK. CCR, TITLE 24, PART 1, SECTION 4-338 AND DSA IR A-6.
3. ALL TESTS TO CONFORM TO THE REQUIREMENTS OF CCR, TITLE 24, PART 1, SECTION 4-335 AND APPROVED FORM DSA 103 "LIST OF REQUIRED STRUCTURAL INSPECTIONS AND SPECIAL INSPECTIONS.
4. TESTS OF MATERIALS AND TESTING LABORATORY SHALL BE IN ACCORDANCE WITH CCR, TITLE 24, PART 1, SECTION 4-335 AND THE DISTRICT SHALL EMPLOY AND PAY THE LABORATORY. COSTS OF RE-TEST MAY BE BACK CHARGED TO THE CONTRACTOR, SEE SPECIFICATIONS.
5. DSA SHALL BE NOTIFIED AT THE START OF CONSTRUCTION AND PRIOR TO THEPLACEMENT OF CONCRETE PER CCR, TITLE 24, PART 1, SECTION 4-331.
6. A DSA "CERTIFIED" PROJECT INSPECTOR SHALL BE APPROVED BY DSA AND EMPLOYED BY THE OWNER. INSPECTION SHALL BE IN ACCORDANCE WITH CCR, TITLE 24, PART 1, SECTIONS 4-333(b) AND 4-342.
7. SUPERVISION OF CONSTRUCTION BY DSA SHALL BE IN ACCORDANCE WITH CCR, TITLE 24, PART 1, SECTION 4-334.
8. CONTRACTOR, INSPECTOR, ARCHITECT, AND ENGINEERS SHALL SUBMIT VERIFIED REPORTS IN ACCORDANCE WITH CCR, TITLE 24, PART 1, SECTIONS 4-336 AND 4-343.
9. THE ARCHITECT AND THE STRUCTURAL ENGINEER SHALL PERFORM THEIR DUTIES IN ACCORDANCE WITH CCR, TITLE 24, PART 1, SECTIONS 4-333(a) AND 4-341.
10. THE CONTRACTOR SHALL PERFORM HIS DUTIES IN ACCORDANCE WITH CCR, TITLE 24, PART 1, SECTION 4-343.
11. THE INTENT OF THE DRAWINGS AND SPECIFICATIONS, AS DESCRIBED IN THE SUMMARY OF WORK, IS TO BE IN ACCORDANCE WITH CCR, TITLE 24, CALIFORNIA CODE OF REGULATIONS. SHOULD ANY CONDITIONS DEVELOP NOT COVERED BY THE CONTRACT DOCUMENTS WHEREIN FINISHED WORK WILL NOT COMPLY WITH CCR, TITLE 24, A CONSTRUCTION CHANGE DOCUMENT DETAILING AND SPECIFYING THE REQUIRED WORK SHALL BE SUBMITTED TO AND APPROVED BY THE DIVISION OF THE STATE ARCHITECT BEFORE PROCEEDING WITH THE WORK (SECTION 4-317(c), PART 1, TITLE 24, CCR).
12. COMPLIANCE WITH CFC CH 33 FIRE SAFETY DURING CONSTRUCTION AND DEMOLITION, AND CBC CH 33 SAFEGUARDS DURING CONSTRUCTION WILL BE ENFORCED. SEE ALSO SPECIFICATON DIV. 1.
13. SUBSTITUTIONS AFFECTING DSA REGULATED ITEMS SHALL BE SUBMITTED AS CONSTRUCTION CHANGE DOCUMENTS OR ADDENDA, AND SHALL BE APPROVED BY DSA PRIOR TO FABRICATION OR INSTALLATION, AS REQUIRED BY SECTION 4-338, PART 1, TITLE 24, CCR.
14. MATERIALS AND THEIR INSTALLATION SHALL COMPLY WITH APPLICABLE CODES, STANDARDS AND MANUFACTURERS RECOMMENDATIONS.
15. PER CBC 11B-104.1 "ALL DIMENSIONS ARE SUBJECT TO CONVENTIONAL INDUSTRY TOLERANCES EXCEPT WHERE THE REQUIREMENT IS STATED AS A RANGE WITH SPECIFIC MINIMUM AND MAXIMUM END POINTS."
16. ALL WORK SHALL CONFORM TO 2022 TITLE 24, CALIFORNIA CODE OF REGULATIONS (CCR).
17. CHANGES TO THE APPROVED DRAWINGS AND SPECIFICATIONS SHALL BE MADE BY AN ADDENDUM OR A CONSTRUCTION CHANGE DOCUMENT (CCD) APPROVED BY THE DIVISION OF THE STATE ARCHITECT, AS REQUIRED BY SECTION 4-338, PART 1, TITLE 24, CCR.
18. A DSA ACCEPTED TESTING LABORATORY DIRECTLY EMPLOYED BY THE DISTRICT (OWNER) SHALL CONDUCT ALL THE REQUIRED TESTS AND INSPECTIONS FOR THE PROJECT.
19. GRADING PLANS, DRAINAGE IMPROVEMENTS, ROAD AND ACCESS REQUIREMENTS AND ENVIRONMENTAL HEALTH CONSIDERATIONS SHALL COMPLY WITH ALL LOCAL ORDINANCES.
20. FIRE SAFETY DURING CONSTRUCTION AND DEMOLITION WILL BE ENFORCED IN ACCORDANCE WITH CBC & CFC CHAPTER 33.

ENERGY CODE NOTES:

1. THE CALIFORNIA ENERGY CODE SECTION 10-103 REQUIRES ACCEPTANCE TESTING ON ALL NEWLY INSTALLED LIGHTING CONTROLS, MECHANICAL SYSTEMS, ENVELOPES, AND PROCESS EQUIPMENT AFTER INSTALLATION AND BEFORE PROJECT COMPLETION. AN ACCEPTANCE TEST IS A FUNCTIONAL PERFORMANCE TEST TO HELP ENSURE THAT NEWLY INSTALLED EQUIPMENT IS OPERATING AND IN COMPLIANCE WITH THE ENERGY CODE.
2. LIGHTING CONTROLS ACCEPTANCE TESTS MUST BE PERFORMED BY A CERTIFIED LIGHTING CONTROLS ACCEPTANCE TEST TECHNICIAN (ATT).
3. MECHANICAL SYSTEM ACCEPTANCE TESTS MUST BE PERFORMED BY A CERTIFIED MECHANICAL ATT FOR PROJECTS SUBMITTED ON OR AFTER OCTOBER 1, 2021.
4. ENVELOPE AND PROCESS EQUIPMENT ACCEPTANCE TESTS SHALL PERFORMED BY THE INSTALLING CONTRACTOR, ENGINEER/ARCHITECT OF RECORD OR THE OWNER'S AGENT.
5. A LISTING OF CERTIFIED ATT CAN BE FOUND AT: https://www.energy.ca.gov/programs-and-topics/programs/acceptance-test-technician-certification-provider-program/acceptance
6. THE ACCEPTANCE TESTING PROCEDURES MUST BE REPEATED, AND DEFICIENCIES MUST BE CORRECTED BY THE BUILDER OR INSTALLING CONTRACTOR UNTIL THE CONSTRUCTION/INSTALLATION OF THE SPECIFIED SYSTEMS CONFORM AND PASS THE REQUIRED ACCEPTANCE CRITERIA.
7. PROJECT INSPECTORS WILL COLLECT THE FORMS TO CONFIRM THAT THE REQUIRED ACCEPTANCE TESTS HAVE BEEN COMPLETED.

VICINITY MAP

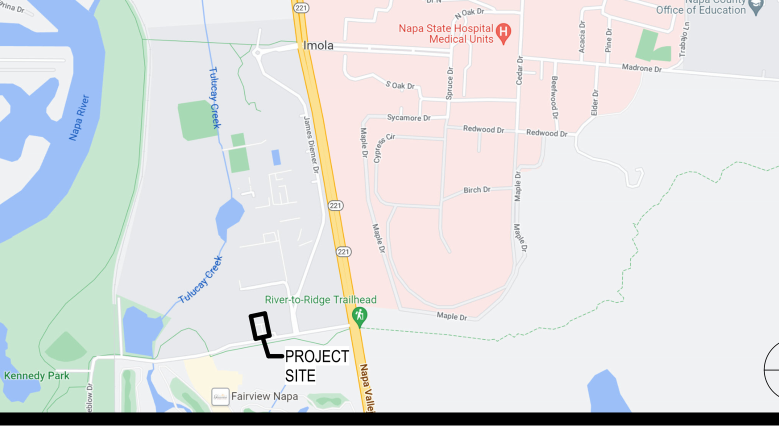

10/2/2023 2:53:44 PM

AGENCY APPROVAL STAMP:

IDENTIFICATION STAMP
DIV. OF THE STATE ARCHITECT
APP: 01-120890 INC:
REVIEWED FOR
SS ☑ FLS ☑ ACS ☑
DATE: 10/25/2023

TLCDARCHITECTURE
520 Third St. #250
Santa Rosa, CA 95401
o: 707.525.5600
f: 707.525.5616
tlcd.com

CONSULTANT:

STAMP:

LICENSED ARCHITECT
CARL SERVAIS
C-32941
REN:12/31/23
STATE OF CALIFORNIA

REVISIONS:

Number	Date	Description

NAPA VALLEY COLLEGE WINE EDUCATION CENTER
2277 NAPA VALLEJO HWY
NAPA, CA 94558

NAPA VALLEY COLLEGE

DSA APPLICATION NUMBER:
01-120890

TLCD PROJECT NUMBER:
21062.00

DATE:
04/12/2023

© THESE DRAWINGS ARE INSTRUMENTS OF SERVICE AND ARE THE SOLE PROPERTY OF TLCD ARCHITECTURE; ANY USE WITHOUT WRITTEN CONSENT IS PROHIBITED.

TITLE SHEET

G-001

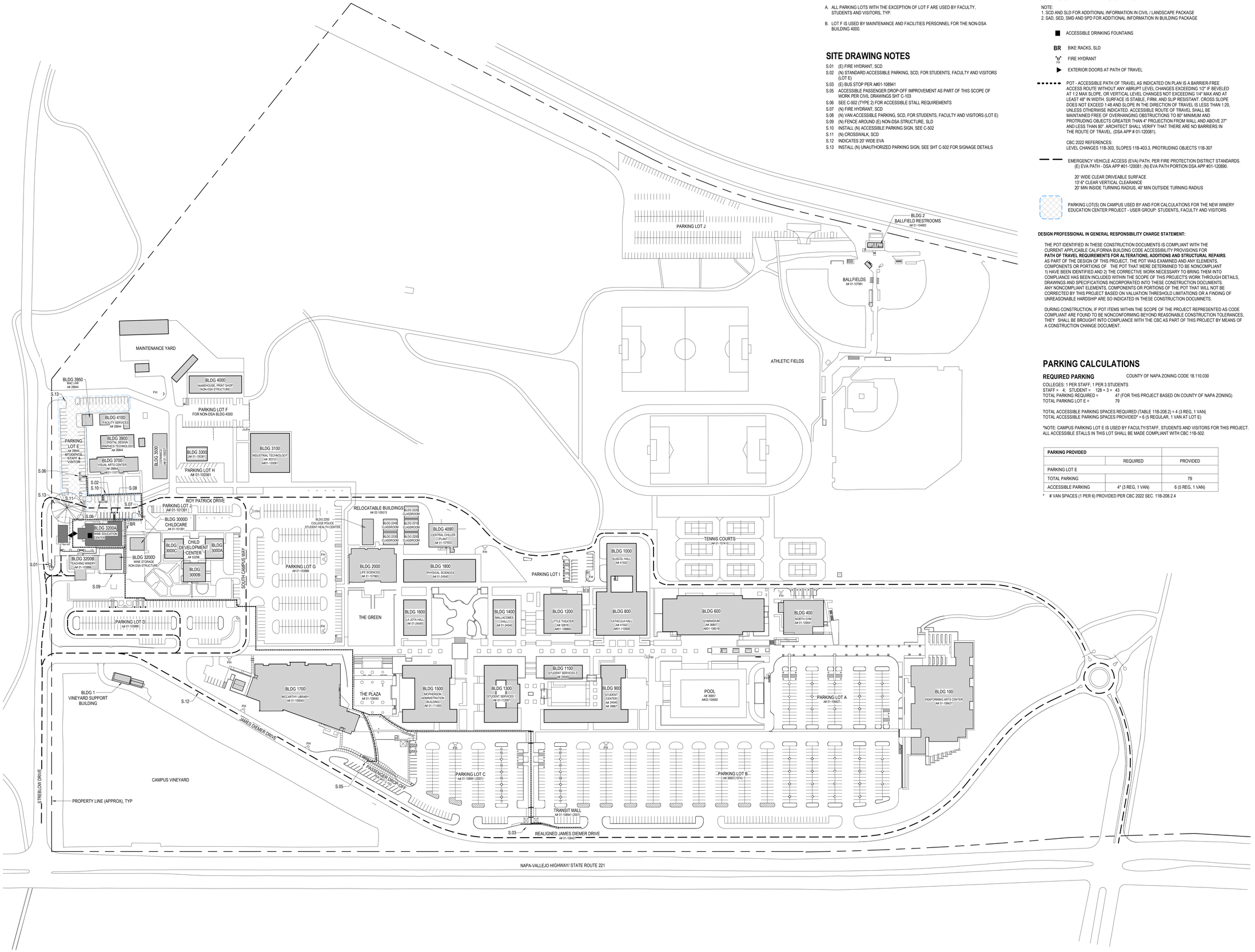

1 **CAMPUS PLAN**

1" = 100'-0"

PROJECT NORTH

TRUE NORTH

10/20/2023 2:53:51 PM

GENERAL NOTES

A. ALL PARKING LOTS WITH THE EXCEPTION OF LOT F ARE USED BY FACULTY, STUDENTS AND VISITORS, TYP.

B. LOT F IS USED BY MAINTENANCE AND FACILITIES PERSONNEL FOR THE NON-DSA BUILDING 4000.

SITE DRAWING NOTES

S.01 (E) FIRE HYDRANT, SCD
S.02 (N) STANDARD ACCESSIBLE PARKING, SCD, FOR STUDENTS, FACULTY AND VISITORS (LOT E)
S.03 (E) BUS STOP PER A#01-108941
S.05 ACCESSIBLE PASSENGER DROP-OFF IMPROVEMENT AS PART OF THIS SCOPE OF WORK PER CIVIL DRAWINGS SHT C-103
S.06 SEE C-502 (TYPE 2) FOR ACCESSIBLE STALL REQUIREMENTS
S.07 (N) FIRE HYDRANT, SCD
S.08 (N) VAN ACCESSIBLE PARKING, SCD, FOR STUDENTS, FACULTY AND VISITORS (LOT E)
S.09 (N) FENCE AROUND (E) NON-DSA STRUCTURE, SLD
S.10 INSTALL (N) ACCESSIBLE PARKING SIGN, SEE C-502
S.11 (N) CROSSWALK, SCD
S.12 INDICATES 20' WIDE EVA
S.13 INSTALL (N) UNAUTHORIZED PARKING SIGN, SEE SHT C-502 FOR SIGNAGE DETAILS

SITE CODE ANALYSIS LEGEND

NOTE:
1. SCD AND SLD FOR ADDITIONAL INFORMATION IN CIVIL / LANDSCAPE PACKAGE
2. SAD, SED, SMD AND SPD FOR ADDITIONAL INFORMATION IN BUILDING PACKAGE

■ ACCESSIBLE DRINKING FOUNTAINS

BR BIKE RACKS, SLD

FH FIRE HYDRANT

▶ EXTERIOR DOORS AT PATH OF TRAVEL

POT - ACCESSIBLE PATH OF TRAVEL AS INDICATED ON PLAN IS A BARRIER-FREE ACCESS ROUTE WITHOUT ANY ABRUPT LEVEL CHANGES EXCEEDING 1/2" IF BEVELED AT 1:2 MAX SLOPE, OR VERTICAL LEVEL CHANGES NOT EXCEEDING 1/4" MAX AND AT LEAST 48" IN WIDTH. SURFACE IS STABLE, FIRM, AND SLIP RESISTANT. CROSS SLOPE DOES NOT EXCEED 1:48 AND SLOPE IN THE DIRECTION OF TRAVEL IS LESS THAN 1:20, UNLESS OTHERWISE INDICATED. ACCESSIBLE ROUTE OF TRAVEL SHALL BE MAINTAINED FREE OF OVERHANGING OBSTRUCTIONS TO 80" MINIMUM AND PROTRUDING OBJECTS GREATER THAN 4" PROJECTION FROM WALL AND ABOVE 27" AND LESS THAN 80", ARCHITECT SHALL VERIFY THAT THERE ARE NO BARRIERS IN THE ROUTE OF TRAVEL. (DSA APP # 01-120081).

CBC 2022 REFERENCES:
LEVEL CHANGES 11B-303, SLOPES 11B-403.3, PROTRUDING OBJECTS 11B-307

EMERGENCY VEHICLE ACCESS (EVA) PATH, PER FIRE PROTECTION DISTRICT STANDARDS. (E) EVA PATH - DSA APP #01-120081; (N) EVA PATH PORTION DSA APP #01-120890.

20' WIDE CLEAR DRIVEABLE SURFACE
13'-6" CLEAR VERTICAL CLEARANCE
20' MIN INSIDE TURNING RADIUS, 40' MIN OUTSIDE TURNING RADIUS

PARKING LOT(S) ON CAMPUS USED BY AND FOR CALCULATIONS FOR THE NEW WINERY EDUCATION CENTER PROJECT - USER GROUP: STUDENTS, FACULTY AND VISITORS

DESIGN PROFESSIONAL IN GENERAL RESPONSIBILITY CHARGE STATEMENT:

THE POT IDENTIFIED IN THESE CONSTRUCTION DOCUMENTS IS COMPLIANT WITH THE CURRENT APPLICABLE CALIFORNIA BUILDING CODE ACCESSIBILITY PROVISIONS FOR **PATH OF TRAVEL REQUIREMENTS FOR ALTERATIONS, ADDITIONS AND STRUCTURAL REPAIRS**. AS PART OF THE DESIGN OF THIS PROJECT, THE POT WAS EXAMINED AND ANY ELEMENTS, COMPONENTS OR PORTIONS OF THE POT THAT WERE DETERMINED TO BE NONCOMPLIANT 1) HAVE BEEN IDENTIFIED AND 2) THE CORRECTIVE WORK NECESSARY TO BRING THEM INTO COMPLIANCE HAS BEEN INCLUDED WITHIN THE SCOPE OF THIS PROJECT'S WORK THROUGH DETAILS, DRAWINGS AND SPECIFICATIONS INCORPORATED INTO THESE CONSTRUCTION DOCUMENTS. ANY NONCOMPLIANT ELEMENTS, COMPONENTS OR PORTIONS OF THE POT THAT WILL NOT BE CORRECTED BY THIS PROJECT BASED ON VALUATION THRESHOLD LIMITATIONS OR A FINDING OF UNREASONABLE HARDSHIP ARE SO INDICATED IN THESE CONSTRUCTION DOCUMNETS.

DURING CONSTRUCTION, IF POT ITEMS WITHIN THE SCOPE OF THE PROJECT REPRESENTED AS CODE COMPLIANT ARE FOUND TO BE NONCONFORMING BEYOND REASONABLE CONSTRUCTION TOLERANCES, THEY SHALL BE BROUGHT INTO COMPLIANCE WITH THE CBC AS PART OF THIS PROJECT BY MEANS OF A CONSTRUCTION CHANGE DOCUMENT.

PARKING CALCULATIONS

REQUIRED PARKING COUNTY OF NAPA ZONING CODE 18.110.030

COLLEGES: 1 PER STAFF; 1 PER 3 STUDENTS
STAFF = 4; STUDENT = 128 ÷ 3 = 43
TOTAL PARKING REQUIRED = 47 (FOR THIS PROJECT BASED ON COUNTY OF NAPA ZONING)
TOTAL PARKING LOT E = 79

TOTAL ACCESSIBLE PARKING SPACES REQUIRED (TABLE 11B-208.2) = 4 (3 REG, 1 VAN)
TOTAL ACCESSIBLE PARKING SPACES PROVIDED* = 6 (5 REGULAR, 1 VAN AT LOT E)

*NOTE: CAMPUS PARKING LOT E IS USED BY FACULTY/STAFF, STUDENTS AND VISITORS FOR THIS PROJECT. ALL ACCESSIBLE STALLS IN THIS LOT SHALL BE MADE COMPLIANT WITH CBC 11B-502.

PARKING PROVIDED		
	REQUIRED	PROVIDED
PARKING LOT E		
TOTAL PARKING		79
ACCESSIBLE PARKING	4* (3 REG, 1 VAN)	6 (5 REG, 1 VAN)

* # VAN SPACES (1 PER 6) PROVIDED PER CBC 2022 SEC. 11B-208.2.4

AGENCY APPROVAL STAMP:

IDENTIFICATION STAMP
DIV. OF THE STATE ARCHITECT
APP: 01-120890 INC:
REVIEWED FOR
SS ☑ FLS ☑ ACS ☑
DATE: 10/25/2023

TLCDARCHITECTURE
520 Third St. #250
Santa Rosa, CA 95401
o: 707.525.5600
f: 707.525.5616
tlcd.com

CONSULTANT:

STAMP:

LICENSED ARCHITECT
CARL SERTAIN
C-32347
REN:12/31/23
STATE OF CALIFORNIA

REVISIONS:

Number	Date	Description

NAPA VALLEY COLLEGE WINE EDUCATION CENTER

2277 NAPA VALLEJO HWY
NAPA, CA 94558

NAPA VALLEY COLLEGE

DSA APPLICATION NUMBER:
01-120890

TLCD PROJECT NUMBER:
21062.00

DATE:
04/12/2023

CAMPUS PLAN - CODE ANALYSIS

G-002

© THESE DRAWINGS ARE INSTRUMENTS OF SERVICE AND ARE THE SOLE PROPERTY OF TLCD ARCHITECTURE. ANY USE WITHOUT WRITTEN CONSENT IS PROHIBITED.

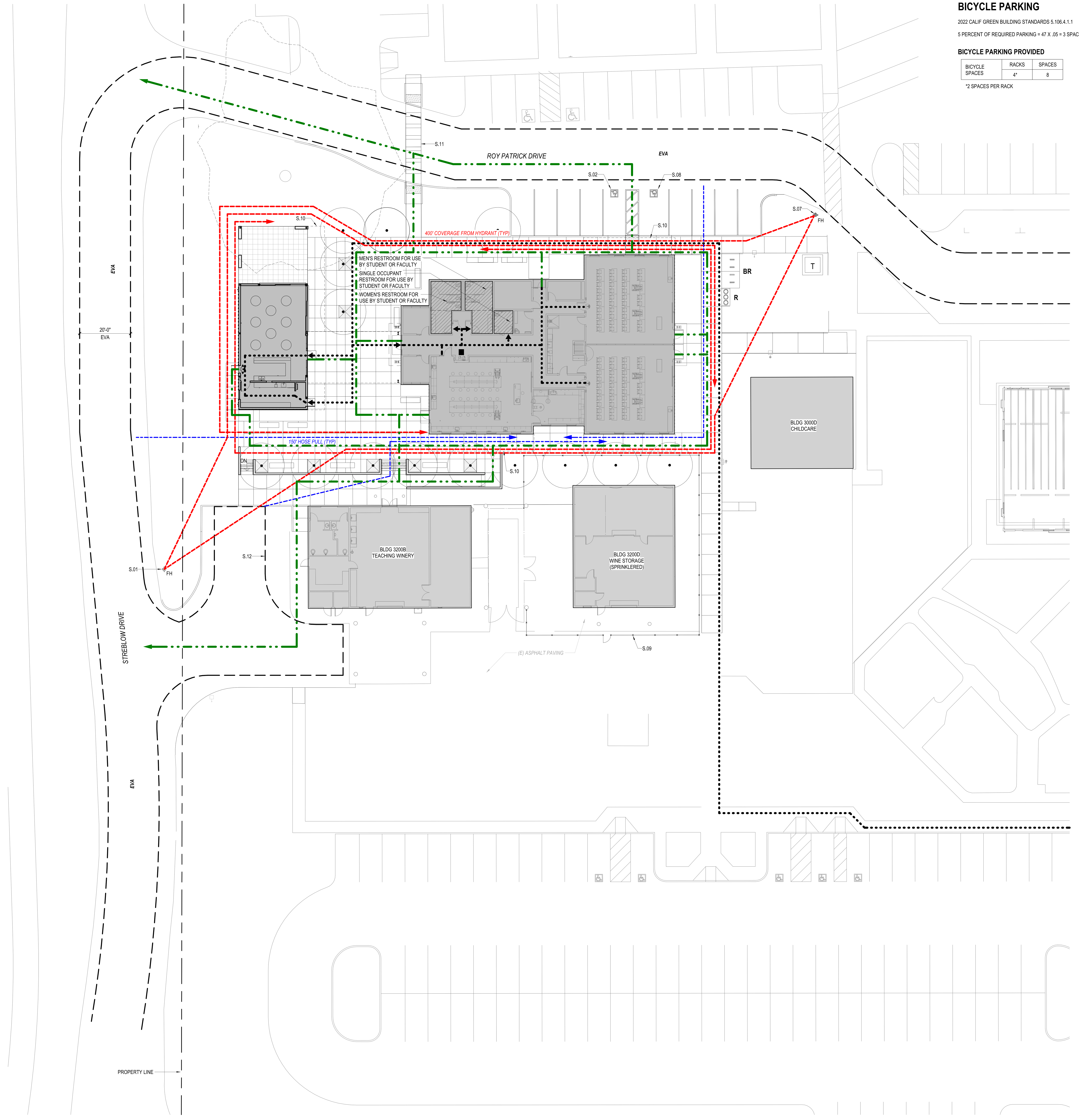

10/2/2023 2:53:55 PM

1 PARTIAL SITE CODE ANALYSIS

1/16" = 1'-0"

BICYCLE PARKING

2022 CALIF GREEN BUILDING STANDARDS 5.106.4.1.1

5 PERCENT OF REQUIRED PARKING = 47 X .05 = 3 SPACES REQ'D

BICYCLE PARKING PROVIDED

	RACKS	SPACES
BICYCLE SPACES	4*	8

*2 SPACES PER RACK

SITE CODE ANALYSIS LEGEND

NOTE:
1. SCD AND SLD FOR ADDITIONAL INFORMATION IN CIVIL / LANDSCAPE PACKAGE
2. SAD, SED, SMD AND SPD FOR ADDITIONAL INFORMATION IN BUILDING PACKAGE

- BUILDING FOOTPRINT
- ACCESSIBLE DRINKING FOUNTAINS
- BR — BIKE RACKS, SLD
- R — RECYCLING CONTAINERS, SLD
- FH — FIRE HYDRANT
- EXTERIOR DOORS AT PATH OF TRAVEL
- SP — STANDARD ACCESSIBLE PARKING SPACE
- VP — VAN ACCESSIBLE PARKING SPACE

POT - ACCESSIBLE PATH OF TRAVEL AS INDICATED ON PLAN IS A BARRIER-FREE ACCESS ROUTE WITHOUT ANY ABRUPT LEVEL CHANGES EXCEEDING 1/2" IF BEVELED AT 1:2 MAX SLOPE, OR VERTICAL LEVEL CHANGES NOT EXCEEDING 1/4" MAX AND AT LEAST 48" IN WIDTH. SURFACE IS STABLE, FIRM, AND SLIP RESISTANT. CROSS SLOPE DOES NOT EXCEED 1:48 AND SLOPE IN THE DIRECTION OF TRAVEL IS LESS THAN 1:20, UNLESS OTHERWISE INDICATED. ACCESSIBLE ROUTE OF TRAVEL SHALL BE MAINTAINED FREE OF OVERHANGING OBSTRUCTIONS TO 80" MINIMUM AND PROTRUDING OBJECTS GREATER THAN 4" PROJECTION FROM WALL AND ABOVE 27" AND LESS THAN 80". ARCHITECT SHALL VERIFY THAT THERE ARE NO BARRIERS IN THE ROUTE OF TRAVEL.

CBC 2022 REFERENCES:
LEVEL CHANGES 11B-303, SLOPES 11B-403.3, PROTRUDING OBJECTS 11B-307

- PATH OF EXIT DISCHARGE TO PUBLIC RIGHT OF WAY
- FIRE HOSE PULL LENGTH
- HYDRANT COVERAGE
- EMERGENCY VEHICLE ACCESS (EVA) PATH, PER FIRE PROTECTION DISTRICT STANDARDS.
NOTE: SEE CIVIL DRAWINGS FOR ADDITIONAL INFORMATION
20' WIDE CLEAR DRIVEABLE SURFACE
13'-6" CLEAR VERTICAL CLEARANCE
20' MIN INSIDE TURNING RADIUS, 40' MIN OUTSIDE TURNING RADIUS

DESIGN PROFESSIONAL IN GENERAL RESPONSIBILITY CHARGE STATEMENT:

THE PATH OF TRAVEL (POT) IDENTIFIED IN THESE CONSTRUCTION DOCUMENTS IS COMPLIANT WITH THE CURRENT APPLICABLE CALIFORNIA BUILDING CODE ACCESSIBILITY PROVISIONS FOR **PATH OF TRAVEL REQUIREMENTS FOR ALTERATIONS, ADDITIONS AND STRUCTURAL REPAIRS**. AS PART OF THE DESIGN OF THIS PROJECT, THE POT WAS EXAMINED AND ANY ELEMENTS, COMPONENTS OR PORTIONS OF THE POT THAT WERE DETERMINED TO BE NONCOMPLIANT 1) HAVE BEEN IDENTIFIED AND 2) THE CORRECTIVE WORK NECESSARY TO BRING THEM INTO COMPLIANCE HAS BEEN INCLUDED WITHIN THE SCOPE OF THIS PROJECT'S WORK THROUGH DETAILS, DRAWINGS AND SPECIFICATIONS INCORPORATED INTO THESE CONSTRUCTION DOCUMENTS. ANY NONCOMPLIANT ELEMENTS, COMPONENTS OR PORTIONS OF THE POT THAT WILL NOT BE CORRECTED BY THIS PROJECT BASED ON VALUATION THRESHOLD LIMITATIONS OR A FINDING OF UNREASONABLE HARDSHIP ARE SO INDICATED IN THESE CONSTRUCTION DOCUMNETS.

DURING CONSTRUCTION, IF POT ITEMS WITHIN THE SCOPE OF THE PROJECT REPRESENTED AS CODE COMPLIANT ARE FOUND TO BE NONCONFORMING BEYOND REASONABLE CONSTRUCTION TOLERANCES, THEY SHALL BE BROUGHT INTO COMPLIANCE WITH THE CBC AS PART OF THIS PROJECT BY MEANS OF A CONSTRUCTION CHANGE DOCUMENT.

MINIMUM REQUIRED FIRE FLOW (CFC APPENDIX BB)

FIRE AREA = 10,467 SF

REQUIRED FIRE FLOW = 3000 GPM @ 20 PSI (CFC TABLE BB 105.1)
REDUCTION IN FIRE FLOW 75% FOR SPRINKLERED BUILDINGS (CFC BB 105.1 EXCEPTION)
= 2750 X 0.25 = 688 GPM @ 20 PSI
= 1500 GPM (MIN GPM ALLOWED)

REQUIRED FIRE FLOW = 1500 GPM @ 20 PSI

ACTUAL FIRE FLOW = 1800 GPM @ 20 PSI
1800 > 1500 (OKAY)

SITE DRAWING NOTES

- S.01 (E) FIRE HYDRANT, SCD
- S.02 (N) STANDARD ACCESSIBLE PARKING, SCD, FOR STUDENTS, FACULTY AND VISITORS (LOT E)
- S.07 (N) FIRE HYDRANT, SCD
- S.08 (N) VAN ACCESSIBLE PARKING, SCD, FOR STUDENTS, FACULTY AND VISITORS (LOT E)
- S.09 (N) FENCE AROUND (E) NON-DSA STRUCTURE, SLD
- S.10 INSTALL (N) ACCESSIBLE PARKING SIGN, SEE C-502
- S.11 (N) CROSSWALK, SCD
- S.12 INDICATES 20' WIDE EVA

DSA 810

FIRE & LIFE SAFETY SITE CONDITIONS SUBMITTAL

Division of the State Architect (DSA) documents referenced within this publication are available on the DSA Forms or DSA Publications webpages.

To facilitate the Division of the State Architect's (DSA) fire and life safety plan review of project site conditions, DSA requires the design professional to provide the following information at time of project submittal for projects consisting of construction of a new campus, construction of new building(s), additions to existing buildings, and for site alternate design means for fire department emergency vehicle access, and fire suppression water supply.

Information associated with compliance items 1 through 3 below is to be provided for all project types indicated above. Information associated with items 4 through 7 is to be completed when an alternate means is utilized. Acknowledgement by the school district and signature from the Local Fire Authority (LFA) is only required when an alternate design means is being requested.

The Project Information and Fire & Life Safety Information sections are to be completed for all projects and imaged onto the fire access site plan. When an alternate design/means is proposed, all sections on pages 1 and 2 are to be completed and imaged on the fire access site plan.

For additional information refer to the instructions at the end of this form and DSA Policy *PL 09-01: Fire Flow for Buildings*.

PROJECT INFORMATION
School District/Owner: Napa Valley College
Project Name/School: Wine Education Center
Project Address: 2277 Napa Vallejo Hwy, Napa, CA 94558

FIRE & LIFE SAFETY INFORMATION				
1.	Has a fire hydrant flow test been performed within the past 12 months? *(If yes, provide a copy of the test data.)*	Yes ☑		No ☐
2.	Was the fire hydrant water flow test performed as part of this LFA review?	Yes ☐		No ☑
3.	Is the project located within a designated fire hazard severity zone (FHSZ) as established by Cal-Fire? *(If yes, indicate FHSZ classification below.)*	Yes ☐		No ☑
	Refer to the following website for FHSZ locations: http://egis.fire.ca.gov/FHSZ/	Moderate ☐	High ☐	Very High ☐
	Wildland Interface Area (WIFA) *(If any designations are checked, project design must meet the requirements of CBC Chapter 7A.)*			WIFA ☐

DSA 810
FIRE & LIFE SAFETY SITE CONDITIONS SUBMITTAL

	CONDITION MEANS AND METHODS RESOLUTION	Yes	No	N/A	N/R
4.	Emergency vehicle access roadways do not meet CFC requirements.			✓	
4a.	**Acceptable Alternate:** Emergency vehicle and personnel access as proposed by the project architect is acceptable for providing fire suppression and protection of life and property.				
5.	**Fire Hydrants:** Number and spacing does not meet CFC requirements.			✓	
5a.	**Acceptable Alternate:** Number of fire hydrants and spacing as proposed by the project architect is acceptable for fire suppression and protection of life and property.				
6.	**Fire Hydrants:** Water flow and pressure are less than CFC minimum.			✓	
6a.	**Acceptable Alternate:** The available flow and pressure is acceptable for providing fire suppression and protection of life and property.				
7.	Location of fire department connection(s) serving fire sprinkler systems or standpipe systems does not meet CFC requirements.			✓	
7a.	**Acceptable Alternate:** The location of fire department connection serving the fire sprinkler system and/or standpipe system is acceptable for providing fire suppression and protection of life and property.				

(Yes / No / N/A / N/R columns under ALTERNATE ACCEPTED)

School District Acceptance of Acceptable Design Alternates

By signing this form, the school district acknowledges and accepts the proposed design as an alternative to California Building Code (CBC) and California Fire Code (CFC) minimum requirements, as indicated by one or more of the conditions indicated at items 4a, 5a, 6a or 7a, for providing fire and life safety protection of life and property.

Accepted by: ______________________ Title: ______________

Signature: ______________________ Date: ______________

LOCAL FIRE AUTHORITY (LFA) INFORMATION	
LFA Agency Name:	
LFA Review Official:	
Title:	Work Phone:
Work Email:	

LFA Reviewer's Signature: ______________________ Date: ______________

AGENCY APPROVAL STAMP:

IDENTIFICATION STAMP
DIV. OF THE STATE ARCHITECT
APP: 01-120890 INC:
REVIEWED FOR
SS ☑ FLS ☑ ACS ☑
DATE: 10/25/2023

TLCDARCHITECTURE
520 Third St. #250
Santa Rosa, CA 95401
o: 707.525.5600
f: 707.525.5616
tlcd.com

CONSULTANT:

STAMP:

LICENSED ARCHITECT
CARL SERVAIS
C-32941
REN:12/31/23
STATE OF CALIFORNIA

REVISIONS:

Number	Date	Description

NAPA VALLEY COLLEGE WINE EDUCATION CENTER

2277 NAPA VALLEJO HWY
NAPA, CA 94558

NAPA VALLEY COLLEGE

DSA APPLICATION NUMBER:
01-120890

TLCD PROJECT NUMBER:
21062.00

DATE:
04/12/2023

© THESE DRAWINGS ARE INSTRUMENTS OF SERVICE AND ARE THE SOLE PROPERTY OF TLCD ARCHITECTURE. ANY USE WITHOUT WRITTEN CONSENT IS PROHIBITED.

PARTIAL SITE PLAN - CODE ANALYSIS

G-003

PLUMBING FIXTURE CALCULATIONS

OCCUPANT LOAD FACTOR CPC 2022 TABLE 422.1 & TABLE A

EDUCATIONAL FACILITIES (COLLEGE)

GROUP A3	@ 2,297 SF / 30 = 77 OCCUP / 2 =		**39 PER GENDER**
GROUP A2	@ 1,084 SF / 30 = 37 OCCUP / 2 =		**19 PER GENDER**
GROUP B	@ 1,627 SF / 200 = 9 OCCUP / 2 =		**5 PER GENDER**

TOTAL: 123 OCCUP = 63 MALE & 63 FEMALE

FIXTURE	MALE REQ	MALE PROVIDED	FEMALE REQ	FEMALE PROVIDED	UNISEX PROVIDED
WC	2	2	4	3	1
UR	1	1	-	-	0
LAV	1	3	2	3	1

	REQD	PROVIDED
DF	1	2

CODE COMPLIANCE PLAN LEGEND

ROOM NAME

B 500 / 100 = 5

- ROOM AREA (SF)
- OCCUPANT LOAD
- FLOOR AREA PER OCCUPANT
- OCCUPANCY CLASSIFICATION
- ACCUMULATIVE OCCUPANT LOAD

EXITS & EXIT ACCESS

- COMMON PATH OF EGRESS TRAVEL
- EXIT ACCESS TRAVEL DISTANCE

DOOR SEPARATIONS

- MAX DIAGONAL DIMENSION OF AREA
- DOOR SEPARATION DISTANCE PROVIDED

EXIT WIDTHS

100 X0.2 = 20"

- EGRESS WIDTH PER OCCUPANT

CALCULATED EXIT WIDTH: 20"
REQUIRED WIDTH: 0"
EXIT WIDTH PROVIDED: 0"

- SUM OF OCCUPANTS AT THIS LOCATION ALONG MEANS OF EGRESS
- PANIC EXIT DEVICE REQUIRED

ABBREVIATIONS

AFSS	AUTOMATIC FIRE SPRINKLER SYSTEM
ALLOW	ALLOWABLE
CPET	COMMON PATH OF EXIT TRAVEL
DSD	DOOR SEPARATION DISTANCE
EATD	EXIT ACCESS TRAVEL DISTANCE
EXCEP	EXCEPTION
GPM	GALLONS PER MINUTE
MDD	MAXIMUM DIAGONAL DISTANCE
OCCUP	OCCUPANTS / OCCUPANCY
OL	OCCUPANT LOAD

AREA SUMMARY

BUILDING AREA SUMMARY:

BUILDING (ENCLOSED AREA):	7,812 SF
TOTAL:	**7,812 SF**

PROJECT AREA SUMMARY BY OCCUPANCY:

A-2:	1,339 SF
A-3:	2,502 SF
B:	3,971 SF
TOTAL:	**7,812 SF**

FIRE AREA SUMMARY: *2022 CFC

BUILDING:	10,467 SF
TOTAL:	**10,467 SF**

*PER 2022 CFC APPENDIX BB104.1, THE FIRE AREA SHALL BE THE TOTAL FLOOR AREA OF ALL FLOOR LEVELS WITHIN THE EXTERIOR WALLS AND UNDER THE HORIZONTAL PROJECTIONS OF THE ROOF OF A BUILDING.

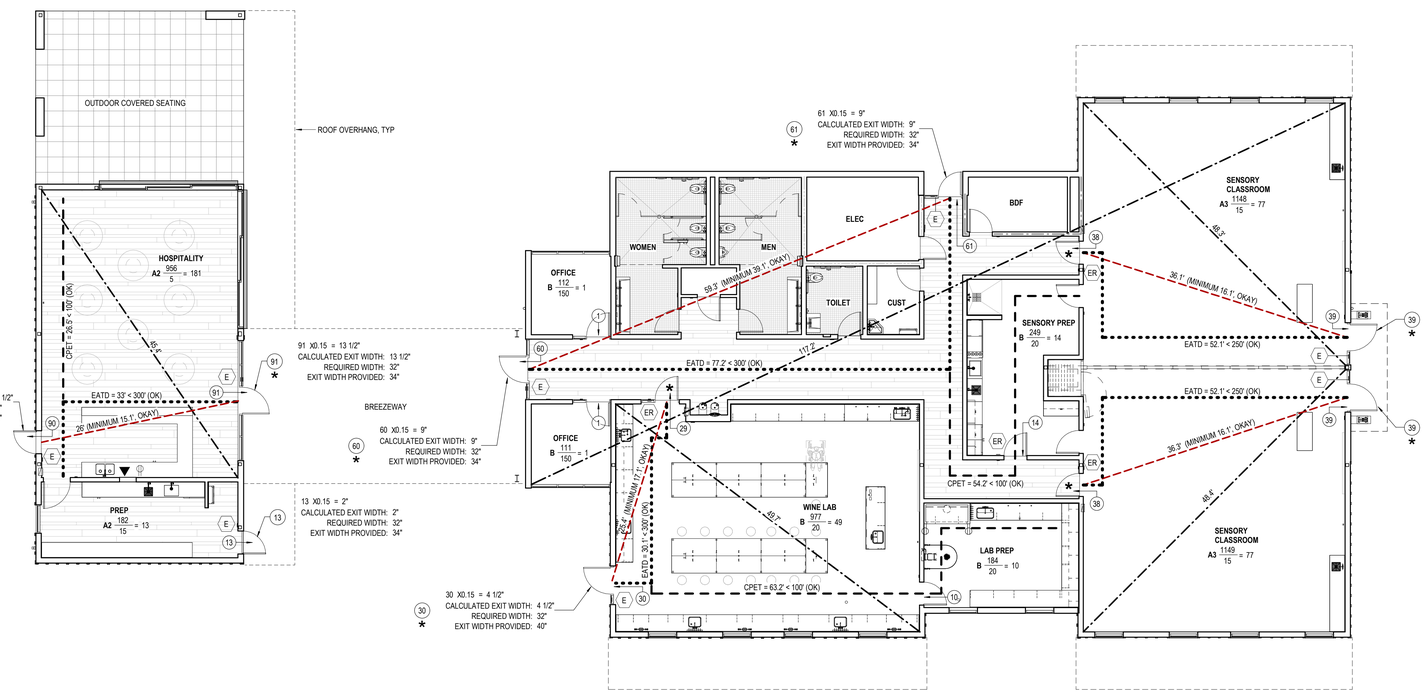

1 **BUILDING CODE ANALYSIS**
1/8" = 1'-0"

GENERAL CODE COMPLIANCE NOTES

A. CODE COMPLIANCE ANALYSIS IS BASED ON 2022 CBC.

B. BUILDING AREAS INDICATED ARE FOR CODE COMPLIANCE COMPUTATIONS ONLY - REFER TO FLOOR PLANS FOR CONSTRUCTION DIMENSIONS.

C. PLUMBING FIXTURE OCCUPANT LOAD CALCULATED PER 2022 CPC, CHAPTER 4, TABLE A (SHAFTS, CORRIDORS & STAIRS OMITTED) AND MAY DIFFER FROM EXIT CALCULATION LOADS.

D. PARKING CALCULATED BY USER COUNT (SHAFTS, CORRIDORS & STAIRS OMITTED) AND MAY DIFFER FROM EXIT CALCULATION LOADS.

E. CODE COMPLIANCE DRAWINGS DOCUMENT THE BASIS OF DESIGN INTENT AS IT RELATES TO APPLICABLE BUILDING CODES AND REVIEW BY THE BUILDING AUTHORITIES HAVING JURISDICTION - THE CODE COMPLIANCE DRAWINGS ARE FOR REFERENCE ONLY AND SHALL NOT BE USED BY THE CONTRACTOR FOR CONSTRUCTION PURPOSES.

CODE COMPLIANCE SUMMARY

GENERAL BUILDING HEIGHT AND AREA REQUIREMENTS

BASIS OF DESIGN = 2022 CBC

BUILDING DATA

NONSEPARATED OCCUPANCY BUILDING (MIXED USE) SECT 508.3

OCCUPANCY CLASSIFICATIONS (A OCCUPANCY USED AS MOST RESTRICTIVE)
- **ASSEMBLY GROUP A2 - BANQUET ROOM**
- **ASSEMBLY GROUP A3 - LECTURE HALLS**
- **BUSINESS GROUP B - BUSINESS**

TYPE OF CONSTRUCTION = V-B

AUTOMATIC FIRE SPRINKLER SYSTEM = YES - NFPA 13

AUTOMATIC SMOKE DETECTION SYSTEM (FIRE ALARM) = YES

BUILDING AREA (GROSS) = 7,812 SF

BUILDING FIRE AREA = 10,467 SF **2022 CFC APPENDIX BB104**

NUMBER OF STORIES ABOVE GRADE PLANE = 1 STORY

BUILDING HEIGHT ABOVE GRADE PLANE = 21.1 FT

BUILDING HEIGHT & STORIES CALCULATIONS

S W/O AREA INCREASE

ALLOWABLE HEIGHT TABLE 504.3
- A2 OCCUPANCY, TYPE V-B, S = 60 FT ≥ 21.1 FT ACTUAL = **COMPLIES**
- A3 OCCUPANCY, TYPE V-B, S = 60 FT ≥ 21.1 FT ACTUAL = **COMPLIES**
- B OCCUPANCY, TYPE V-B, S = 60 FT ≥ 21.1 FT ACTUAL = **COMPLIES**

ALLOWABLE STORIES TABLE 504.4
- A2 OCCUPANCY, TYPE V-B, S = 2 STORY ≥ 1 STORY ACTUAL = **COMPLIES**
- A3 OCCUPANCY, TYPE V-B, S = 2 STORY ≥ 1 STORY ACTUAL = **COMPLIES**
- B OCCUPANCY, TYPE V-B, S = 2 STORY ≥ 1 STORY ACTUAL = **COMPLIES (A OCCUPANCY USED AS MOST RESTRICTIVE)**

BUILDING AREA DETERMINATION (Aa)

MIXED OCCUPANCY, S1 SECT 506.2.2

Aa = At + (NS x If) SECT 506.2.2, EQUATION 5-1

A2 OCCUPANCY
- At = 24,000 SF TABLE 506.2
- Aa = 24,000 SF + (6,000 x 0) = 24,000 SF ≥ 1,339 SF ACTUAL = **COMPLIES**

A3 OCCUPANCY
- At = 24,000 SF TABLE 506.2
- Aa = 24,000 SF + (6,000 x 0) = 24,000 SF ≥ 2,501 SF ACTUAL = **COMPLIES**

B OCCUPANCY (USE MOST RESTRICTIVE A OCCUPANCY FOR NONSEPARATED OCCUPANCIES)
- At = 24,000 SF TABLE 506.2
- Aa = 24,000 SF + (6,000 x 0) = 24,000 SF ≥ 5,103 SF ACTUAL = **COMPLIES**

NONSEPARATED OCCUPANCIES (ENTIRE BUILDING AS MOST RESTRICTIVE A OCCUPANCY)
- At = 24,000 SF TABLE 506.2
- Aa = 24,000 SF + (6,000 x 0) = 24,000 SF ≥ 7,812 SF ACTUAL = **COMPLIES**

TYPES OF CONSTRUCTION REQUIREMENTS

FIRE-RESISITANCE RATING FOR BUILDING ELEMENTS

CONSTRUCTION TYPE = V-B TABLE 601

BUILDING ELEMENT	RATING (HRS.)
STRUCTURAL FRAME	0
BEARING WALLS	
EXTERIOR	0
INTERIOR	0
NON-BEARING WALLS & PARTITIONS	
EXTERIOR (FSD > 30 FT)	0
INTERIOR	0
FLOOR CONSTRUCTION	0
ROOF CONSTRUCTION	0

FIRE-RESISITANCE REQUIREMENTS FOR EXTERIOR WALLS BASED ON FIRE SEPARATION DISTANCE TABLE 705.5

FIRE SEPARATION DISTANCE	A & B OCCUP. TYPE V-B CONST
X < 5 FT	1 HR
5 FT ≤ X < 10 FT	1 HR
10 FT ≤ X < 30 FT	0
X ≥ 30 FT	0

MIXED USE RATIO CALCULATION

$\frac{\text{Actual area 1}}{Aa\ 1} + \frac{\text{Actual area 2}}{Aa\ 2} + \ldots \leq 1$ SECT 508.4.2

A-2, A-3 & B OCCUPANCIES
(USE MOST RESTRICTIVE A OCCUPANCY FOR NONSEPARATED OCCUPANCIES)

$\frac{1,339\ SF}{24,000\ SF} + \frac{2,502\ SF}{24,000\ SF} + \frac{3,971\ SF}{24,000\ SF} =$

0.056 + 0.104 + 0.165 = **0.33 ≤ 1 = OKAY**

MEANS OF EGRESS REQUIREMENTS

EXIT ACCESS & TRAVEL DISTANCE LIMITATIONS

W/ SPRINKLER SYSTEM

COMMON PATH OF EGRESS TRAVEL SECT 1006.2.1 & TABLE 1006.2.1
- A OCCUP = 75 FT MAX
- B OCCUP = 100 FT MAX

EXIT ACCESS TRAVEL DISTANCE TABLE 1017.2
- A OCCUP = 250 FT MAX
- B OCCUP = 300 FT MAX

EXIT & EXIT ACCESS DOORWAYS

SPACES WITH ONE MEANS OF EGRESS TABLE 1006.2.1
- A OCCUP = 49 MAX
- B OCCUP = 49 MAX

TWO EXIT SEPARATION DISTANCE SECT 1007.1.1
MIN 1/3 THE MAX OVERALL DIAGONAL (W/ SPRINKLER SYSTEM)

CORRIDOR FIRE-RESITANCE RATING

FIRE PARTITION PER SECT 708 SECT 1020 & TABLE 1020.1
- B OCCUP > 49 OL = 1 HR
- E OCCUP > 49 OL = 1 HR

TACTILE EXIT SIGNS

SECT 1013.4

(E) "EXIT" AT GRADE LEVEL EXIT DOORS

(ER) "EXIT ROUTE" AT INTERIOR EXIT ACCESS DOORS WHERE MORE THAN ONE EXIT IS REQUIRED

AGENCY APPROVAL STAMP:

IDENTIFICATION STAMP
DIV. OF THE STATE ARCHITECT
APP: 01-120890 INC:
REVIEWED FOR
SS ☑ FLS ☑ ACS ☑
DATE: 10/25/2023

TLCDARCHITECTURE
520 Third St. #250
Santa Rosa, CA 95401
o: 707.525.5600
f: 707.525.5616
tlcd.com

CONSULTANT:

STAMP:

LICENSED ARCHITECT
CARL SERTICH
C-32084
REN:12/31/23
STATE OF CALIFORNIA

REVISIONS:

Number	Date	Description

NAPA VALLEY COLLEGE WINE EDUCATION CENTER

2277 NAPA VALLEJO HWY
NAPA, CA 94558

NAPA VALLEY COLLEGE

DSA APPLICATION NUMBER:
01-120890

TLCD PROJECT NUMBER:
21062.00

DATE:
04/12/2023

BUILDING CODE ANALYSIS

G-004

© THESE DRAWINGS ARE INSTRUMENTS OF SERVICE AND ARE THE SOLE PROPERTY OF TLCD ARCHITECTURE. ANY USE WITHOUT WRITTEN CONSENT IS PROHIBITED.

10/2/2023 2:53:58 PM

Project Name: Napa Valley College Wine Education Center **Date Prepared:** 2023-04-13

A. General Information

1	Project Name	Napa Valley College Wine Education Center			
2	Run Title	Title 24 Analysis			
3	Project Location	2277 Napa Vallejo Highway			
4	City	Napa	5	Standards Version	Compliance 2022
6	Zip code	94558	7	Compliance Software (version)	EnergyPro 9.1
8	Climate Zone	2	9	Building Orientation (deg)	350
10	Building Type(s)	• Nonresidential	11	Weather File	NAPA-COUNTY-AP_STYP20.epw
12	Project Scope	• New complete scope	13	Number of Dwelling Units	0
14	Total Conditioned Floor Area in Scope (ft²)	7722	15	Total # of hotel/motel rooms	0
16	Total Unconditioned Floor Area (ft²)	0	17	Fuel Type	Natural gas
18	Nonresidential Conditioned Floor Area	7722	19	Total # of Stories (Habitable Above Grade)	1
20	Residential Conditioned Floor Area	0			

B. PROJECT SUMMARY

Table B shows which building components are included in the performance calculation. If indicated as not included, the project must show compliance prescriptively if within the permit application.

Building Components Complying via Performance						Building Components Complying Prescriptively	
Envelope (See Table G)	Nonres	Performance	Solar Thermal Water Heating (See Table I3)	☐	Performance	The following building components are ONLY eligible for prescriptive compliance and should be documented on the NRCC form listed if within the scope of the permit application (i.e. compliance will not be shown on the NRCC-PRF-E).	
	MultiFam	Not Included		☒	Not Included		
Mechanical (See Table H)	Nonres	Performance	Covered Process: Commercial Kitchens (see Table J)	☐	Performance	Indoor Lighting (Unconditioned) 140.6 & 170.2(e)	NRCC-LTI-E is required
	MultiFam	Not Included		☒	Not Included	Outdoor Lighting 140.7 & 170.2(e)	NRCC-LTO-E is required
Domestic Hot Water (See Table I)	Nonres	Performance	Covered Process: Laboratory Exhaust (see Table J)	☐	Performance	Sign Lighting 140.8 & 170.2(e)	NRCC-LTS-E is required
	MultiFam	Not Included		☒	Not Included	**Building Components Complying with Mandatory Measures**	
Lighting (Indoor Conditioned, see Table K)	Nonres	Performance	Photovoltaics (see Table F)	☒	Performance	Electrical power systems, commissioning, solar ready, elevator and escalator requirements are mandatory and should be documented on the NRCC form listed if applicable (i.e. compliance will not be shown on the NRCC-PRF-E.)	
	MultiFam	Not Included		☐	Not Included	Electrical Power Distribution 110.11	NRCC-ELC-E is required
			Battery (see Table F)	☒	Performance	Commissioning 120.8	NRCC-CXR-E is required
				☐	Not Included	Solar and Battery 110.10	NRCC-SAB-E is required

C1. COMPLIANCE SUMMARY

COMPLIES[3]

	Time Dependent Valuaton (TDV)		Source Energy Use
	Efficiency[1] (kBtu/ft² - yr)	Total[2] (kBtu/ft² - yr)	Total[2] (kBtu/ft² - yr)
Standard Design	209.95	157.86	13.97
Proposed Design	169.95	77.97	11.92
Compliance Margins	**40**	**79.89**	**2.05**
	Pass	**Pass**	**Pass**

[1] *Efficiency measures include improvements like a better building envelope and more efficient equipment*
[2] *Compliance Totals include efficiency, photovoltaics and batteries*
[3] *Building complies when efficiency and total compliance margins are greater than or equal to zero and unmet load hour limits are not exceeded*

C2. TDV ENERGY COMPLIANCE RESULTS FOR PERFORMANCE COMPONENTS (Annual TDV Energy Use, kBtu/ft² - yr)

COMPLIES[2]

Energy Component	Standard Design (TDV)	Proposed Design (TDV)	Compliance Margin (TDV)[1]
Space Heating	21.09	18.37	2.72
Space Cooling	46.16	29.19	16.97
Indoor Fans	88.62	63.06	25.56
Heat Rejection	0	0	0
Pumps & Misc.	0	0	0
Domestic Hot Water	23.3	20.43	2.87
Indoor Lighting	30.78	38.9	-8.12
Flexibility	---	---	---
EFFICIENCY COMPLIANCE TOTAL	**209.95**	**169.95**	**40 (19.1%)**
Photovoltaics	-49.3	-82.49	33.19
Batteries	-2.79	-9.49	6.7
TOTAL COMPLIANCE	**157.86**	**77.97**	**79.89 (50.6%)**

[1] *Notes: This number in parenthesis following the Compliance Margin in column 4, represents the Percent Better than Standard.*

C3. TDV ENERGY RESULTS FOR NON-REGULATED COMPONENTS[1]

Non-Regulated Energy Component	Standard Design (TDV)	Proposed Design (TDV)	Compliance Margin (TDV)[1]
Receptacle	58.81	58.81	---
Process	43.44	43.44	---
Other Ltg	---	---	---
Process Motors	---	---	---
TOTAL (TOTAL COMPLIANCE + NON-REGULATED COMPONENTS)	**260.11**	**180.22**	**79.89 (30.7%)**

[1] *Notes: This table is not used for Energy Code Compliance.*

C4. SOURCE ENERGY COMPLIANCE RESULTS FOR PERFORMANCE COMPONENTS (Annual SOURCE Energy Use, kBtu/ft² /yr)

COMPLIES[2]

Energy Component	Standard Design (SOURCE)	Proposed Design (SOURCE)	Compliance Margin (SOURCE)[1]
Space Heating	2.93	2.54	0.39
Space Cooling	1.62	0.88	0.74
Indoor Fans	7.55	5.52	2.03
Heat Rejection	0	0	0
Pumps & Misc.	0	0	0
Domestic Hot Water	2.02	4.26	-2.24
Indoor Lighting	2.43	3.07	-0.64
Flexibility	---	---	---
EFFICIENCY COMPLIANCE TOTAL	**16.55**	**16.27**	**0.28 (1.7%)**
Photovoltaics	-1.73	-2.92	1.19
Batteries	-0.85	-1.43	0.58
TOTAL COMPLIANCE	**13.97**	**11.92**	**2.05 (14.7%)**

[1] *Notes: This number in parenthesis following the Compliance Margin in column 4, represents the Percent Better than Standard.*

C5. SOURCE ENERGY RESULTS FOR NON-REGULATED COMPONENTS[1]

Non-Regulated Energy Component	Standard Design (SOURCE)	Proposed Design (SOURCE)	Compliance Margin (SOURCE)[1]
Receptacle	4.34	4.34	---
Process	3.24	3.24	---
Other Ltg	---	---	---
Process Motors	---	---	---
TOTAL (TOTAL COMPLIANCE + NON-REGULATED COMPONENTS)	**21.55**	**19.5**	**2.05 (9.5%)**

[1] *Notes: This table is not used for Energy Code Compliance.*

C6. 'ABOVE CODE' QUALIFICATIONS

☐ This project is pursuing CalGreen Tier 1 ☐ This project is pursuing CalGreen Tier 2

C7. ENERGY USE SUMMARY

Energy Component	Standard Design Site (MWh)	Proposed Design Site (MWh)	Margin (MWh)	Standard Design Site (MBtu)	Proposed Design Site (MBtu)	Margin (MBtu)
Space Heating	5.3	4.6	0.7	---	---	---
Space Cooling	8.3	4.4	3.9	---	---	---
Indoor Fans	23.6	16.9	6.7	---	---	---
Heat Rejection	---	---	---	---	---	---
Pumps & Misc.	---	---	---	---	---	---
Domestic Hot Water	7.4	3.5	3.9	---	28.3	---
Indoor Lighting	9	11.3	-2.3	---	---	---
Flexibility	---	---	---	---	---	---
EFFICIENCY TOTAL	**53.6**	**40.7**	**12.9**	**0**	**28.3**	**-28.3**
Photovoltaics	-19.2	-29.8	10.6	---	---	---
Batteries	0.2	0.4	-0.2	---	---	---
ENERGY USE SUBTOTAL	**34.6**	**11.3**	**23.3**	**0**	**28.3**	**-28.3**
Receptacle	18	18	0	---	---	---
Process	13.2	13.2	0	---	---	---
Other Ltg	---	---	---	---	---	---
Process Motors	---	---	---	---	---	---
ENERGY USE TOTAL	**65.8**	**42.5**	**23.3**	**0**	**28.3**	**-28.3**

C8. ENERGY USE INTENSITY (EUI)

	Standard Design (kBtu/ft² / yr)	Proposed Design (kBtu/ft² / yr)	Margin (kBtu/ft² / yr)	Margin Percentage
GROSS EUI[1]	37.56	35.61	1.95	5.19
NET EUI[1]	29.07	22.44	6.63	22.81

[1] *Notes: Gross EUI is Energy Use Total (not including PV)/Total Building Area. Net EUI is Energy Use Total (including PV)/Total Building Area.*

D1. EXCEPTIONAL CONDITIONS

- The aged solar reflectance and aged thermal emittance must be listed in the Cool Roof Rating Council database of certified products. For projects where initial reflectance is used, the initial reflectance must be listed, and the aged reflectance is calculated by the software program and used in the compliance model.
- The project uses the Simplified Geometry Performance Modeling Approach which is not capable of modeling daylighting controls and assumes the prescriptive Secondary Daylit Control requirements are met. PRESCRIPTIVE COMPLIANCE documentation (form NRCC-LTI-02-E) for the requirements of section 140.6(d) Automatic Daylighting Controls in Secondary Daylit Zones is required.
- PV/Battery Building Type has been modified from software defaults for one or more spaces. Review project's PV/Battery Building Type(s) with documentation author. Refer to Energy Code section 140.10 for Nonresidential or 170.2(g) for more information.

F1. REQUIRED PV SYSTEMS

01	02	03	04	05	06	07	08	09	10	11	12
DC System Size (kWdc)	Exception[1]	Module Type	Array Type	Power Electronics	CFI	Azimuth (deg)	Tilt Input	Array Angle (deg)	Tilt: (x in 12)	Inverter Eff. (%)	Annual Solar Access (%)
20.64	n/a	Standard (14-17%)	Fixed	DC Power Optimizers	false	260	Degrees	7.1	1.49	96	100

[1]*See Table D1 for any PV exceptions used.*

F1B. PV BATTERY BUILDING TYPE(S)

01	02	03
Building Occupancy Type* (From Table 140.10-A/B and 170.2-U/V)	Conditioned Floor Area (ft²)	Unconditioned Floor Area (ft²)
Grocery	0	0
High-Rise Multifamily	0	0
Office, Financial Institutions, Unleased Tenant Space	0	0
Retail	0	0
School	7722	0
Warehouse	0	0
Auditorium, Convention Center, Hotel/Motel, Library, Medical Office Building/Clinic, Restaurant, Theater	0	0
None	0	0

**Building Occupancy Types are defined in Section 100.1 of the Energy Code*

F2. BATTERY SYSTEMS[1]

01	02	03	04	05	06	07
Control	Capacity (kWh)	Charging Efficiency	Charging Rate (kW)	Discharging Efficiency	Discharging Rate (kW)	Round Trip Efficiency
TOU	66	N/A	6	N/A	6	0.9

[1]*See Table D1 for any Battery exceptions used.*

G1. ENVELOPE GENERAL INFORMATION (conditioned spaces only)

01	02	03	04
Opaque Surfaces & Orientation	Total Gross Surface Area (ft²)	Total Fenestration Area (ft²)	Window to Wall Ratio (%)
North-Facing[1]	1970	617.2	31.33
East-Facing[2]	2523	283.4	11.23
South-Facing[3]	2187	149.4	6.83
West-Facing[4]	2376	479.4	20.18
Total	**9056**	**1529.4**	**16.89**
Roof	7722	0	0

Notes
[1]*North-Facing is oriented to within 45 degrees of true north, including 45 00'00" east of north (NE), but excluding 45 00'00" west of north (NW),*
[2]*East-Facing is oriented to within 45 degrees of true east, including 45 00'00" south of east (SE), but excluding 45 00'00" north of east (NE),*
[3]*South-Facing is oriented to within 45 degrees of true south, including 45 00'00" west of south (SW), but excluding 45 00'00" east of south (SE),*
[4]*West-Facing is oriented to within 45 degrees of true west, including 45 00'00" north of west (NW), but excluding 45 00'00" south of west (SW),*

G2A. ROOFING PRODUCT SUMMARY (NONRESIDENTIAL)

01	02	03	04	05	06
Assembly Name	Roof Pitch	Roof Rise (x in 12)	Aged Solar Reflectance	Thermal Emittance	SRI
TPO Roof: 2 Polyiso+R-3013	LowSlope	N/A	0.7	0.86	N/A
SSM Roof: 1.5 Polyiso+R-15	LowSlope	N/A	0.68	0.3	N/A

G4. NONRESIDENTIAL AIR BARRIER

01	02
Building Story Name	Air Barrier
Com-Floor 1	No air barrier

G5. OPAQUE SURFACE ASSEMBLY SUMMARY

01	02	03	04	05	06		07	08	09	10
Surface Name	Construction Type	Area (ft²)	Framing Type	Cavity R-Value	Continuous R-Value		Units	Value	Description of Assembly Layers	Status[1]
					Interior	Exterior				
TPO Roof: 2 Polyiso+R-3013	Roof	4,607	Wood	30	N/A	10	U-factor	0.0265	Single Ply Roofing - 1/4 in. Compliance Insulation R10.00 Plywood - 5/8 in. Composite-1	N
SSM Roof: 1.5 Polyiso+R-15	Roof	3,115	Wood	30	N/A	14.5	U-factor	0.0235	Metal Standing Seam - 1/16 in. Compliance Insulation R7.50 Plywood - 5/8 in. Compliance Insulation R7.00 Composite-2	N
R-21 + R-5 Wall 1: board17	Exterior Wall	5,406	Wood	21	N/A	5	U-factor	0.0442	Hardboard - HDF - 50 lb/ft3 - 5/8in. Vapor permeable felt - 1/8 in. Extruded Polystyrene - XPS - 1 in. R5.00 Plywood - 5/8 in. Composite-3 Gypsum Board - 5/8 in.	N
R-21 + R-5 Wall 3: plaste26	Exterior Wall	410	Wood	21	N/A	5	U-factor	0.0458	Stucco - 7/8 in. Vapor permeable felt - 1/8 in. Extruded Polystyrene - XPS - 1 in. R5.00 Plywood - 5/8 in. Composite-4 Gypsum Board - 5/8 in.	N
Slab On Grade28	Underground Floor	7,722	N/A	0	N/A	N/A	F-factor	0.73	Slab Type =Unheated slab on grade Insulation Orientation =None Insulation R-Value =none	N

[1] *Status: N - New, A - Altered, E - Existing*

G5. OPAQUE SURFACE ASSEMBLY SUMMARY

01	02	03	04	05	06		07	08	09	10
Surface Name	Construction Type	Area (ft²)	Framing Type	Cavity R-Value	Continuous R-Value		Units	Value	Description of Assembly Layers	Status[1]
					Interior	Exterior				
R-21 + R-5 Wall 2: cement72	Exterior Wall	3,240	Wood	21	N/A	5	U-factor	0.0438	Fiber cement board - 88 lb/ft3 - 1/2 in. Air - Wall - 1/2 in. Vapor permeable felt - 1/8 in. Extruded Polystyrene - XPS - 1 in. R5.00 Plywood - 5/8 in. Composite-5 Gypsum Board - 5/8 in.	N

[1] *Status: N - New, A - Altered, E - Existing*

G6A. OPAQUE DOOR SUMMARY (NONRESIDENTIAL)

01	02	03	04
Assembly Name	Area (ft²)	Overall U-factor	Status[1]
Solid Wood Door143	21	0.5	N

[1] *Status: N - New, A - Altered, E - Existing*

G7A. FENESTRATION ASSEMBLY SUMMARY (NONRESIDENTIAL)

01	02	03	04	05	06	07	08	09
Fenestration Assembly Name	Fenestration Type/ Product Type / Frame Type	Certification Method[1]	Assembly Method	Area (ft²)	Overall U-factor	Overall SHGC	Overall VT	Status[2]
SB70 c	Vertical fenestration Curtain wall N/A	NFRC	Site built	234.3	0.35	0.25	0.6	N
SB70 sf	Vertical fenestration Curtain wall N/A	NFRC	Site built	831.1	0.35	0.25	0.6	N
SB70 dr	Vertical fenestration Curtain wall N/A	NFRC	Manufactured	140	0.35	0.25	0.6	N
SB70 sg dr	Vertical fenestration Glazed door N/A	NFRC	Manufactured	324	0.4	0.22	0.6	N

[1] *Notes: Newly installed fenestration shall have a certified NFRC Label Certificate or use the CEC default tables found in Table 110.6-A and Table 110.6-B. Center of Glass (COG) values are for the glass-only, determined by the manufacturer, and are shown for ease of verification. Site-built fenestration values are calculated per Nonresidential Appendix NA6 and are used in the analysis.*
[2] *Status: N - New, A - Altered, E - Existing*

H1. DRY SYSTEM EQUIPMENT (FURNACES, AIR HANDLING UNITS, HEAT PUMPS, VRF, ECONOMIZERS ETC.)

01	02	03	04	05	06	07	08	09	10	11	12
			Heating				Cooling				
Equipment Name	Equipment Type	Qty	Total Heating Output (kBtu/h)	Supp Heat Output (kBtu/h)	Efficiency Unit	Efficiency	Total Cooling Output (kBtu/h)	Efficiency Unit	Efficiency	Economizer Type (if present)	Status[1]
RTU-1	Single Zone Heat Pump (SZHP) Air System	1	73.65	53.24	COP	3.4	78.92	EER	13.1	Fixed DB	N
RTU-2	Single Zone Heat Pump (SZHP) Air System	1	55.66	35.5	N/A	NA	61.01	EER2 SEER2	13 16.4	Fixed DB	N
RTU-3	Single Zone Heat Pump (SZHP) Air System	1	55.66	35.5	N/A	NA	61.01	EER2 SEER2	13 16.4	Fixed DB	N
RTU-4	Single Zone Heat Pump (SZHP) Air System	1	55.66	35.5	N/A	NA	61.01	EER2 SEER2	13 16.4	Fixed DB	N
IU-1/OU-1: 2T	MiniSplit HP	1	26	0	N/A	NA	24	EER SEER	12.2 21.4	N/A	N
IU-2/OU-2: 2T	MiniSplit HP	1	26	0	N/A	NA	24	EER SEER	12.2 21.4	N/A	N
HP-1	Variable Refrigerant Flow	1	108	N/A	COP	3.94	96	EER	13.7	N/A	N

[1] *Status: N - New, A - Altered, E - Existing*

H3. NONRESIDENTIAL / COMMON USE AREA FAN SYSTEMS SUMMARY

01	02	03	04	05	06	07	08	09	10	11	12	13
			Supply Fan				Return / Relief Fan					
Name or Item Tag	Qty	Design OA CFM	CFM	Power	Power Units	Control	Fan Type	CFM	Power	Power Units	Control	Status[1]
RTU-1	1	471.2	2,400	1.01	BHP	Constant Vol	N/A	N/A	N/A	N/A	N/A	N
RTU-2	1	471.2	1,990	0.67	BHP	Constant Vol	N/A	N/A	N/A	N/A	N/A	N
RTU-3	1	471.2	1,990	0.67	BHP	Constant Vol	N/A	N/A	N/A	N/A	N/A	N
RTU-4	1	653	1,990	0.67	BHP	Constant Vol	N/A	N/A	N/A	N/A	N/A	N
5-FC-1 Zone-VRF	1	127.5	318	0.05	BHP	Constant Vol	N/A	N/A	N/A	N/A	N/A	N
6-FC-2 Zone-VRF	1	114.38	742	0.08	BHP	Constant Vol	N/A	N/A	N/A	N/A	N/A	N
7-FC-3 Zone-VRF	1	18.6	494	0.07	BHP	Constant Vol	N/A	N/A	N/A	N/A	N/A	N
8-FC-4 Zone-VRF	1	18.6	494	0.07	BHP	Constant Vol	N/A	N/A	N/A	N/A	N/A	N
9-FC-5 Zone-VRF	1	225.6	1,077	0.19	BHP	Constant Vol	N/A	N/A	N/A	N/A	N/A	N
IU-1/OU-1: 2T	1	0	700	0.06	BHP	Constant Vol	N/A	N/A	N/A	N/A	N/A	N
IU-2/OU-2: 2T	1	0	700	0.06	BHP	Constant Vol	N/A	N/A	N/A	N/A	N/A	N

[1] *Status: N - New, A - Altered, E - Existing*

H5. GENERAL EXHAUST FAN SUMMARY

01	02	03	04	05	06	07	08
System ID	Zone Name	Qty	CFM	Power	Power Units	Continuous Operation?	Status[1]
Wine Lab 104 Zone3	1-Wine Lab 104 Zone	1	1200	0.25	BHP	No	N
FC-1 Zone59	4-FC-1 Zone	1	350	0.17	BHP	No	N
FC-2 Zone66	5-FC-2 Zone	1	320	0.17	BHP	No	N

[1] *Status: N - New, A - Altered, E - Existing*

AGENCY APPROVAL STAMP:

IDENTIFICATION STAMP
DIV. OF THE STATE ARCHITECT
APP: 01-120890 INC:
REVIEWED FOR
SS ☑ FLS ☑ ACS ☑
DATE: 10/25/2023

TLCDARCHITECTURE
520 Third St. #250
Santa Rosa, CA 95401
o: 707.525.5600
f: 707.525.5616
tlcd.com

CONSULTANT:

STAMP:

LICENSED ARCHITECT
CARL SERVAIS
C-32941
REN:12/31/23
STATE OF CALIFORNIA

REVISIONS:

Number	Date	Description

NAPA VALLEY COLLEGE WINE EDUCATION CENTER

2277 NAPA VALLEJO HWY
NAPA, CA 94558

NAPA VALLEY COLLEGE

DSA APPLICATION NUMBER: 01-120890
TLCD PROJECT NUMBER: 21062.00
DATE: 04/12/2023

© THESE DRAWINGS ARE INSTRUMENTS OF SERVICE AND ARE THE SOLE PROPERTY OF TLCD ARCHITECTURE. ANY USE WITHOUT WRITTEN CONSENT IS PROHIBITED.

TITLE 24 ENERGY COMPLIANCE

G-005

10/2/2023 2:53:59 PM

H8. SYSTEM SPECIAL FEATURES

01	02	03	04
System Name	Equipment Type	Interlocks per 140.4(n)[1]	Other Special Features and Controls
RTU-1	Single Zone Heat Pump (SZHP) Air System	N/A	Zone(s) With CO2 Sensor Vent. Control Fixed DB
RTU-2	Single Zone Heat Pump (SZHP) Air System	N/A	Zone(s) With CO2 Sensor Vent. Control Fixed DB
RTU-3	Single Zone Heat Pump (SZHP) Air System	N/A	Zone(s) With CO2 Sensor Vent. Control Fixed DB
RTU-4	Single Zone Heat Pump (SZHP) Air System	N/A	Zone(s) With CO2 Sensor Vent. Control Fixed DB
HP-1	Variable Refrigerant Flow	N/A	Heat Recovery
WH-11 - SHW	Service Hot Water	N/A	Fixed Temperature Control
WH-2127 - SHW	Service Hot Water	N/A	Fixed Temperature Control

Notes: This table includes controls related to the performance path only. For projects using the prescriptive path, mandatory and prescriptive controls requirements are documented on the NRCC-MCH-E.

[1] Yes = interlocks are provided, No = interlocks are not provided, NA means no operable openings.

H9. NONRESIDENTIAL / COMMON USE AREA & HOTEL/MOTEL VENTILATION

01	02	03	04	05	06	07
Zone Name	Mechanical Ventilation				Conditioned Area (sf)	DCV or Occupant Sensor Controls, or Both
	Ventilation Function	# of People# of People	Supply OA CFM	Exhaust CFM		
1-Wine Lab 104 Zone	Education - Classrooms (ages 9-18)	31	471.2	1200	1240	DCV
2-Classroom 113 Zone	Education - Classrooms (ages 9-18)	31	471.2	0	1240	DCV
3-Classroom 115 Zone	Education - Classrooms (ages 9-18)	31	471.2	0	1240	DCV

H9. NONRESIDENTIAL / COMMON USE AREA & HOTEL/MOTEL VENTILATION

01	02	03	04	05	06	07
Zone Name	Mechanical Ventilation				Conditioned Area (sf)	DCV or Occupant Sensor Controls, or Both
	Ventilation Function	# of People# of People	Supply OA CFM	Exhaust CFM		
4-FC-1 Zone	Education - University/college laboratories	8.5	127.5	350	340	N/A
5-FC-2 Zone	Education - University/college laboratories	7.63	114.38	320	305	N/A
6-FC-3 Zone	Office - Office space	0.62	18.6	0	124	N/A
7-FC-4 Zone	Office - Office space	0.62	18.6	0	124	N/A
8-FC-5 Zone	General - Corridors	7.52	225.6	0	1504	N/A
9-Elec 111 Zone	General - Unoccupied	0.28	0	0	189	N/A
10-BDF 112 Zone	General - Unoccupied	0.17	0	0	110	N/A
11-Hospitality 116 Zone	Education - Multiuse assembly Food Service - Bars, cocktail lounges	43.54	653	0	1306	DCV

H11. ZONAL SYSTEM AND TERMINAL UNIT SUMMARY

01	02	03	04	05	06	07	08	09	10	11	12
System ID	System Type	Qty	Rated Capacity (kBtuh)		Airflow (cfm)			Fan			VSD
			Heating	Cooling	Design	Min.	Min. Ratio	Power	Power Units	Cycles	
1-Wine Lab 104 Zone-Trm	Uncontrolled	1	N/A	N/A	2,400	N/A	0	N/A	N/A	N/A	☐
2-Classroom 113 Zone-Trm	Uncontrolled	1	N/A	N/A	1,990	N/A	0	N/A	N/A	N/A	☐
3-Classroom 115 Zone-Trm	Uncontrolled	1	N/A	N/A	1,990	N/A	0	N/A	N/A	N/A	☐
11-Hospitality 116 Zone-Trm	Uncontrolled	1	N/A	N/A	1,990	N/A	0	N/A	N/A	N/A	☐
5-FC-1 Zone-VRF	Variable Refrigerant Flow	1	13.5	12	318	N/A	N/A	0.05	BHP	Continuous	☐
6-FC-2 Zone-VRF	Variable Refrigerant Flow	1	27	24	742	N/A	N/A	0.08	BHP	Continuous	☐

H11. ZONAL SYSTEM AND TERMINAL UNIT SUMMARY

01	02	03	04	05	06	07	08	09	10	11	12
System ID	System Type	Qty	Rated Capacity (kBtuh)		Airflow (cfm)			Fan			VSD
			Heating	Cooling	Design	Min.	Min. Ratio	Power	Power Units	Cycles	
7-FC-3 Zone-VRF	Variable Refrigerant Flow	1	13.5	12	494	N/A	N/A	0.07	BHP	Continuous	☐
8-FC-4 Zone-VRF	Variable Refrigerant Flow	1	13.5	12	494	N/A	N/A	0.07	BHP	Continuous	☐
9-FC-5 Zone-VRF	Variable Refrigerant Flow	1	40	36	1,077	N/A	N/A	0.19	BHP	Continuous	☐
IU-1/OU-1: 2T	MiniSplit HP	1	26	24	700	N/A	N/A	0.06	BHP	Continuous	☐
IU-2/OU-2: 2T	MiniSplit HP	1	26	24	700	N/A	N/A	0.06	BHP	Continuous	☐

I1. WATER HEATER EQUIPMENT SUMMARY

01	02	03	04	05	06	07	08	09	10	11	12	13	14
Name	Heater Element Type	Tank Type	Qty	Tank Vol (gal)	Rated Input	Rated Input Unit	Efficiency	Efficiency Unit	Tank Insulation R-value Int/Ext	Standby Loss Fraction	1st Hr. Rating or Flow Rate (gal)	Heat Pump Type	Tank Location or Ambient Condition
WH-1: 100 gal 96%2	Natural Gas	Storage	1	100	250	kBtu/Hr	kBtu/Hr	TE	N/A	0.01	N/A	N/A	N/A
WH-2: 30 g 10kW128	Electricity	Storage	1	30	9	kW	kW	UEF	N/A	N/A	N/A	N/A	N/A

K1. INDOOR CONDITIONED LIGHTING GENERAL INFO

01	02	03	04	05	06
Occupancy Type[1]	Conditioned Floor Area[2] (ft^2)	Installed Lighting Power (Watts)	Lighting Control Credits (Watts)	Additional (Custom) Allowance	
				Area Category Footnotes (Watts)	Area Category Footnotes (Watts)
Classroom, Lecture, or Training Vocational	4365	3711	0	0	0
Convention, Conference, Multipurpose and Meeting Center	1015	751	0	0	0
Corridor	1504	568	0	0	0
Dining - Family	291	214	0	0	0
Electrical Mechanical Telephone Room	299	138	0	0	0
Office (250 square feet)	248	152	0	0	0
Building Totals:	**7722**	**5534**	**0**	**0**	**0**

[1]See Table 140.6-C
[2]See NRCC-LTI--E for unconditioned spaces
[3]Lighting information for existing spaces modeled is not included in this table

K2. INDOOR CONDITIONED LIGHTING SCHEDULE

Luminaire Schedule (includes all permanent installed lighting in conditioned space, and portable lighting over 0.3 w/ft^2 in offices)

01	02	03	04	05	06
Name or Item Tag	Complete Luminaire Description (i.e. 3-lamp fluorescent troffer, F32T8, one dimmable electronic ballast)	Installed Watts (Conditioned)			
		Watts per luminaire	How is Wattage determined	Total Number of Luminaires	Installed Watts
AA1E	AA1E: 337w LED, suspended	337	According to	1	337
AA3	AA3: 531w LED, suspended	531	According to	1	531
AM1	AM1: 11w LED, 2' undercabinet	11	According to	4	44
AM2	AM2: 22w LED, 4' undercabinet	22	According to	6	132
AA2E	AA2E: 445w LED, suspended	445	According to	2	890
AA4	AA4: 700w LED, suspended	700	According to	2	1400
AJ1	AJ1: 29w LED, 2x2 troffer	29	According to	14	406
AB1	AB1: 29w LED, 2x2 rec	29	According to	16	464
AB2	AB2: 38w LED, 2x2 rec	38	According to	4	152
AK1	AK1: 11w LED, 4" rec downlt	11	According to	1	11
AE1	AE1: 65w LED, 10' surface	65	According to	2	130
AE2	AE2: 39w LED, 6' surface	39	According to	2	78
AE3	AE3: 28w LED, 8' surface	28	According to	1	28
AL2	AL2: 20w LED, 4' surface, strip	20	According to	1	20
AL1	AL1: 11w LED, 2' surface, strip	11	According to	2	22
AL3	AL3: 36w LED, 8' surface, strip	36	According to	2	72

[1]If lighting power densities were used in the compliance model Building Departments will need to check prescriptive forms for Luminaire Schedule details.

K2. INDOOR CONDITIONED LIGHTING SCHEDULE

Luminaire Schedule (includes all permanent installed lighting in conditioned space, and portable lighting over 0.3 w/ft^2 in offices)

01	02	03	04	05	06
Name or Item Tag	Complete Luminaire Description (i.e. 3-lamp fluorescent troffer, F32T8, one dimmable electronic ballast)	Installed Watts (Conditioned)			
		Watts per luminaire	How is Wattage determined	Total Number of Luminaires	Installed Watts
AL4	AL4: 33w LED, 4' surface, strip	33	According to	2	66
AC1	AC1: 24w LED, 4.5" rec downlt	24	According to	18	432
AG1	AG1: 38w LED, wall, uplight	38	According to	5	190
AH1	AH1: 16w LED, dec pendant	16	According to	3	48
AD1	AD1: 9w LED, rec downlt	9	According to	9	81

[1]If lighting power densities were used in the compliance model Building Departments will need to check prescriptive forms for Luminaire Schedule details.

K3. INDOOR CONDITIONED LIGHTING CONTROL CREDITS

Lighting Control Credits Schedule (includes all lighting controls installed in conditioned space for compliance credit per 140.6(a)2 and Table 140.6-A)

01	02	03	04	05	06	07	08	09
Area Description	Primary Function Area (must meet requirements of Table 140.6-A and 170.2-L)	Type of Lighting Control	Power Adjustment Factor (PAF)	Luminaire Item Tag	Watts per Luminaire	# of Luminaires	Lighting Controlled (Watts)	Control Credit (Watts)
S-1-Wine Lab 104 Zone	Classroom, Lecture, or Training Vocational	N/A	N/A	AA1E	337	1	337	0
S-1-Wine Lab 104 Zone	Classroom, Lecture, or Training Vocational	N/A	N/A	AA3	531	1	531	0
S-1-Wine Lab 104 Zone	Classroom, Lecture, or Training Vocational	N/A	N/A	AM1	11	2	22	0
S-1-Wine Lab 104 Zone	Classroom, Lecture, or Training Vocational	N/A	N/A	AM2	22	2	44	0
S-2-Classroom 113 Zone	Classroom, Lecture, or Training Vocational	N/A	N/A	AA2E	445	1	445	0
S-2-Classroom 113 Zone	Classroom, Lecture, or Training Vocational	N/A	N/A	AA4	700	1	700	0
S-3-Classroom 115 Zone	Classroom, Lecture, or Training Vocational	N/A	N/A	AA2E	445	1	445	0
S-3-Classroom 115 Zone	Classroom, Lecture, or Training Vocational	N/A	N/A	AA4	700	1	700	0
S-4-FC-1 Zone	Classroom, Lecture, or Training Vocational	N/A	N/A	AJ1	29	7	203	0
S-4-FC-1 Zone	Classroom, Lecture, or Training Vocational	N/A	N/A	AM1	11	1	11	0
S-4-FC-1 Zone	Classroom, Lecture, or Training Vocational	N/A	N/A	AM2	22	2	44	0
S-5-FC-2 Zone	Classroom, Lecture, or Training Vocational	N/A	N/A	AB1	29	6	174	0
S-5-FC-2 Zone	Classroom, Lecture, or Training Vocational	N/A	N/A	AM2	22	2	44	0

K3. INDOOR CONDITIONED LIGHTING CONTROL CREDITS

Lighting Control Credits Schedule (includes all lighting controls installed in conditioned space for compliance credit per 140.6(a)2 and Table 140.6-A)

01	02	03	04	05	06	07	08	09
Area Description	Primary Function Area (must meet requirements of Table 140.6-A and 170.2-L)	Type of Lighting Control	Power Adjustment Factor (PAF)	Luminaire Item Tag	Watts per Luminaire	# of Luminaires	Lighting Controlled (Watts)	Control Credit (Watts)
S-5-FC-2 Zone	Classroom, Lecture, or Training Vocational	N/A	N/A	AM1	11	1	11	0
S-6-FC-3 Zone	Office (250 square feet)	N/A	N/A	AB2	38	2	76	0
S-7-FC-4 Zone	Office (250 square feet)	N/A	N/A	AB2	38	2	76	0
S-8-FC-5 Zone	Corridor	N/A	N/A	AB1	29	10	290	0
S-8-FC-5 Zone	Corridor	N/A	N/A	AK1	11	1	11	0
S-8-FC-5 Zone	Corridor	N/A	N/A	AE1	65	2	130	0
S-8-FC-5 Zone	Corridor	N/A	N/A	AE2	39	2	78	0
S-8-FC-5 Zone	Corridor	N/A	N/A	AE3	28	1	28	0
S-8-FC-5 Zone	Corridor	N/A	N/A	AL2	20	1	20	0
S-8-FC-5 Zone	Corridor	N/A	N/A	AL1	11	1	11	0
S-9-Elec 111 Zone	Electrical Mechanical Telephone Room	N/A	N/A	AL3	36	2	72	0
S-10-BDF 112 Zone	Electrical Mechanical Telephone Room	N/A	N/A	AL4	33	2	66	0
S-11-Hospitality 116 Zone	Convention, Conference, Multipurpose and Meeting Center	N/A	N/A	AC1	24	18	432	0
S-11-Hospitality 116 Zone	Convention, Conference, Multipurpose and Meeting Center	N/A	N/A	AG1	38	5	190	0
S-11-Hospitality 116 Zone	Convention, Conference, Multipurpose and Meeting Center	N/A	N/A	AH1	16	3	48	0

K3. INDOOR CONDITIONED LIGHTING CONTROL CREDITS

Lighting Control Credits Schedule (includes all lighting controls installed in conditioned space for compliance credit per 140.6(a)2 and Table 140.6-A)

01	02	03	04	05	06	07	08	09
Area Description	Primary Function Area (must meet requirements of Table 140.6-A and 170.2-L)	Type of Lighting Control	Power Adjustment Factor (PAF)	Luminaire Item Tag	Watts per Luminaire	# of Luminaires	Lighting Controlled (Watts)	Control Credit (Watts)
S-11-Hospitality 116 Zone	Convention, Conference, Multipurpose and Meeting Center	N/A	N/A	AD1	9	9	81	0
S-12-Prep 117 Zone	Dining - Family	N/A	N/A	AJ1	29	7	203	0
S-12-Prep 117 Zone	Dining - Family	N/A	N/A	AL1	11	1	11	0
Lighting Control Credits (Conditioned) Total (Watts)								0

K4. INDOOR CONDITIONED LIGHTING MANDATORY LIGHTING CONTROL

Building Level Controls

01	02
Mandatory Demand Response 110.12(c)	Shut-Off Controls 130.1(c) & 160.5(b)4C
Required	Required

Area Level Controls (includes all lighting controls installed in conditioned space to meet mandatory requirements per 130.1)

03	04	05	06	07	08	09
Area Description	Area Category Primary Function Area	Area Controls 130.1(a) & 160.5(b)4A	Multi-Level Controls 130.1(b) & 160.5(b)4B	Shut-Off Controls 130.1(c) & 160.5(b)4C	Primary Daylighting 130.1(d) & 160.5(b)4D	Secondary Daylighting 140.5(d) & 160.5(b)4D
Wine Lab	Classroom, Lecture, or Training Vocational	Required	Required	Required	Required	Required
Classroom	Classroom, Lecture, or Training Vocational	Required	Required	Required	Required	Required
Sens Prep	Classroom, Lecture, or Training Vocational	Required	Required	Required	Required	Required
Lab Prep	Classroom, Lecture, or Training Vocational	Required	Required	Required	Required	Required

Office	Office (250 square feet)	Required	Required	Required	Required	Required
Toilet	Restroom	Required	Exempt	Required	NA	NA
Cust	Commercial Industrial Warehouse	Required	Exempt	Required	NA	NA
Mech/Elec	Electrical Mechanical Telephone Room	Required	Exempt	Exempt	NA	NA
Hospitality	Convention, Conference, Multipurpose and Meeting Center	Required	Required	Required	Required	Required

L. DECLARATION OF REQUIRED CERTIFICATES OF INSTALLATION

Selections made by Documentation Author indicate which Certificates of Installation must be submitted for the features to be recognized for compliance. These documents must be retained and provided to the building inspector during construction and can be found online

Building Component	Form/Title
Envelope	NRCI-ENV-01-E - Must be submitted for all buildings
Envelope	NRCI-ENV-E - Envelope (for all buildings)
Mechanical	NRCI-MCH-01-E - Must be submitted for all buildings
Mechanical	NRCI-MCH-E - For all buildings with Mechanical Systems
Plumbing	NRCI-PLB-01-E - Must be submitted for all buildings
Plumbing	NRCI-PLB-E - For all buildings with Plumbing Systems
Indoor Lighting	NRCI-LTI-01-E - Must be submitted for all buildings
Indoor Lighting	NRCI-LTI-E - Indoor Lighting (for all buildings)
Indoor Lighting	NRCI-LTI-02-E- Must be submitted for a lighting control system, or for an Energy Management Control System (EMCS), to be recognized for compliance.

M. DECLARATION OF REQUIRED CERTIFICATES OF ACCEPTANCE

Selections made by Documentation Author indicate which Certificates of Acceptance must be submitted for the features to be recognized for compliance. These documents must be provided to the building inspector during construction and must be completed through an Acceptance Test Technician Certification Provider (ATTCP).

Building Component	Form/Title
Envelope	NRCA-ENV-02-F - NRFC label verification for fenestration
Indoor Lighting	NRCA-LTI-02-A - Occupancy Sensors and Automatic Time Switch Controls.

M. DECLARATION OF REQUIRED CERTIFICATES OF ACCEPTANCE

Selections made by Documentation Author indicate which Certificates of Acceptance must be submitted for the features to be recognized for compliance. These documents must be provided to the building inspector during construction and must be completed through an Acceptance Test Technician Certification Provider (ATTCP).

Building Component	Form/Title
Indoor Lighting	NRCA-LTI-03-A - Automatic Daylight Controls.
Mechanical	NRCA-MCH-02-A - Outdoor Air must be submitted for all newly installed HVAC units. Note: MCH-02-A can be performed in conjunction with MCH-07-A Supply Fan VFD Acceptance (if applicable) since testing activities overlap
Mechanical	NRCA-MCH-03-A - Constant Volume Single Zone HVAC
Mechanical	NRCA-MCH-05-A - Air Economizer Controls
Mechanical	NRCA-MCH-06-A Demand Control Ventilation Systems must be submitted for all systems required to employ demand controlled ventilation (refer to) can vary outside ventilation flow rates based on maintaining interior carbon dioxide (CO2) concentration setpoints.
Mechanical	NRCA-MCH-12-A FDD for Packaged Direct Expansion Units

N. DECLARATION OF REQUIRED CERTIFICATES OF VERIFICATION

Selections made by Documentation Author indicate which Certificates of Verification must be submitted for the features to be recognized for compliance. These documents must be retained and provided to the building inspector during construction and can be found online

There are no Certificates of Verification applicable to this project

Documentation Author's Declaration Statement

1. I certify that this Certificate of Compliance documentation is accurate and complete.

Documentation Author Name: Sean Plikuhn	Documentation Author Signature: Sean Plikuhn (Digitally signed by Sean Plikuhn DN: cn=Sean Plikuhn, o=SOLDATA Energy Consulting, email=sean@soldata.com, c=US Date: 2023.04.13 10:43:45 -07'00')
Company: SOLDATA Energy Consulting	Signature Date: 4/13/2023
Address: P.O. Box 8579	CEA/HERS Certification Identification (if applicable):
City/State/Zip: Santa Rosa, CA 95407	Phone: 707-545-4440

Responsible Person's Declaration statement

I certify the following under penalty of perjury, under the laws of the State of California:

1. The information provided on this Certificate of Compliance is true and correct.
2. I am eligible under Division 3 of the Business and Professions Code to accept responsibility for the building design or system design identified on this Certificate of Compliance (responsible designer)
3. The energy features and performance specifications, materials, components, and manufactured devices for the building design or system design identified on this Certificate of Compliance conform to the requirements of Title 24, Part 1 and Part 6 of the California Code of Regulations.
4. The building design features or system design features identified on this Certificate of Compliance are consistent with the information provided on other applicable compliance documents, worksheets, calculations, plans and specifications submitted to the enforcement agency for approval with this building permit application.
5. I understand that a registered copy of this Certificate of Compliance shall be made available with the building permit(s) issued for the building, and made available to the enforcement agency for all applicable inspections, and I will take the necessary steps to accomplish this requirement.
6. I understand that a registered copy of this Certificate of Compliance is required to be included with the documentation the builder provides to the building owner at occupancy, and I will take the necessary steps to accomplish these requirements.

Responsible Designer Name: Carl Servais	Responsible Designer Signature:	
Company: TLCD Architecture		
Address: 520 Third Street, Ste 250	Date Signed: 4/13/2023	
City/State/Zip: , Santa Rosa, CA 95405	License #: C-32941	
Phone: 707-525-5600	Title: Principal Architect	Scope:

AGENCY APPROVAL STAMP:

IDENTIFICATION STAMP
DIV. OF THE STATE ARCHITECT
APP: 01-120890 INC:
REVIEWED FOR
SS ☑ FLS ☑ ACS ☑
DATE: 10/25/2023

TLCDARCHITECTURE
520 Third St. #250
Santa Rosa, CA 95401
o: 707.525.5600
f: 707.525.5616
tlcd.com

CONSULTANT:

STAMP:

LICENSED ARCHITECT
CARL SERVAIS
C-32941
REN:12/31/23
STATE OF CALIFORNIA

REVISIONS:

Number	Date	Description

NAPA VALLEY COLLEGE WINE EDUCATION CENTER

2277 NAPA VALLEJO HWY
NAPA, CA 94558

NAPA VALLEY COLLEGE

DSA APPLICATION NUMBER:
01-120890

TLCD PROJECT NUMBER:
21062.00

DATE:
04/12/2023

TITLE 24 ENERGY COMPLIANCE

G-006

© THESE DRAWINGS ARE INSTRUMENTS OF SERVICE AND ARE THE SOLE PROPERTY OF TLCD ARCHITECTURE. ANY USE WITHOUT WRITTEN CONSENT IS PROHIBITED.

10/2/2023 2:54:00 PM

STATE OF CALIFORNIA

Solar And Battery

CALIFORNIA ENERGY COMMISSION

CERTIFICATE OF COMPLIANCE			NRCC-SAB-E
This document is used to demonstrate compliance with prescriptive PV and battery requirements in 140.10/ 170.2 for nonresidential, multifamily and mixed-use buildings and prescriptive solar thermal requirements in 170.2(d)3C for multifamily and hotel/ motel occupancies. When PV/battery/solar thermal requirements don't apply or are traded using the performance approach, this document demonstrates compliance with mandatory solar readiness requirements in 110.10/ 160.8 for newly constructed buildings which are either multifamily ten stories or fewer, hotel/motel ten stories or fewer or all other nonresidential buildings three stories or fewer. It is also used to demonstrate compliance with solar readiness in 110.10/ 160.8 for additions to nonresidential, multifamily or hotel/motel building types which add more than 2,000 ft^2 of roof area. Alterations, or additions of less than 2,000 ft^2 of roof area, are not required to comply with solar readiness, solar PV and battery requirements and do not need to complete this document.			
Project Name:	Napa Valley College Wine Education Center	**Report Page:**	**(Page 1 of 6)**
Project Address:	2277 Napa Vallejo Highway	**Date Prepared:**	4/13/2023

A. GENERAL INFORMATION

01	Project Location (city)	Napa	04	Building Occupancies	All Other OccupanciesConvention CenterOfficeSupport Areas
02	Climate Zone	2	05	Construction Type	New construction
03	Conditioned Floor Area (ft^2)	7722	06	Number of Stories	Bldg <= 3 stories

B. PROJECT SCOPE

The compliance path the project is using to comply per 110.10(b)1B/ 140.10/ 170.2(g and h) is indicated below.

Compliance with Solar Photovoltaic (PV) and Battery Requirements in 140.10/ 170.2(g and h)

	01	
☒	Provided PV system and battery storage sized per 140.10/ 170.2 (g and h)	The project has included an installed PV system and battery storage system per requirements in 140.10/ 170.2(g and h) as documented in Table J.
☐	Exception to PV and Battery: Not enough Solar Access Roof Area	The total of all available Solar Access Roof Area(s) of the project site is less than three percent of the conditioned floor area as documented in Table J.
☐	Exception to PV and Battery: Required PV < 4kW	The required PV system size is less than 4 kW dc as documented in Table J..
☐	Exception to PV and Battery: No contiguous Solar Access Roof Area	The Solar Access Roof Area(s) of the project site contains less than 80 contiguous square feet as documented in Table J.
☐	Exception to PV and Battery: Can't meet snow load	The project has a roof design where the enforcement authority has verified it is not possible for the PV system, including panels, modules, components, supports, and attachments to the roof structure, to meet ASCE 7-16 Chapter 7, Snow Loads.
☐	Exception to PV and Battery: Multi-tenant without VNEM or Community Solar	The project is a multi-tenant building in an area where a load serving entity does not provide either a Virtual Net Metering (VNEM) or community solar program.

STATE OF CALIFORNIA

Solar And Battery

CALIFORNIA ENERGY COMMISSION

CERTIFICATE OF COMPLIANCE			NRCC-SAB-E
Project Name:	Napa Valley College Wine Education Center	**Report Page:**	**(Page 2 of 6)**
Project Address:	2277 Napa Vallejo Highway	**Date Prepared:**	4/13/2023

☐	The prescriptive PV/battery requirement has been traded off using the performance compliance approach as documented on the PRF Certificate of Compliance form.	The project is a multi-tenant building in an area where a load serving entity does not provide either a Virtual Net Metering (VNEM) or community solar program.

Compliance with Solar Thermal Water Heating Requirements in 170.2(d)3C (Multifamiily and hotel/ motel occupancies only)

	01
☐	The project includes a hotel/motel or multifamily occupancy with a gas or propane central water-heating system (serves 2+ dwelling units) and includes a permanently installed domestic solar water-heating system to comply with 170.2(d)3C and Reference Residential Appendix RA4, as documented in Table H. Compliance meets Exception 2 to solar ready requirements in 110.10(b).

C. COMPLIANCE RESULTS

Results in this table are automatically calculated from data input and calculations in Tables F through I. Note: If any cell on this table says "DOES NOT COMPLY" or "COMPLIES with Exceptional Conditions" refer to Table D. for guidance or see the applicable Table referenced below.

Allocated Solar Zone			OR	Installed PV System			OR	Installed SWH System			OR	Smart Tstat and Alternative EE Measure		Compliance Results
01		02		03		04		05		06		07	08	COMPLIES
Required Minimum Area (ft^2)	<=	Designated Area (ft^2)		Required Minimum DC Power Rating (Watts)	<=	Designed DC Power Rating (Watts)		Required Minimum Solar Savings Fraction	<=	Designed/Rated Solar Savings Fraction		JA5 Compliant Thermostat Specified?	Alternative Energy Efficiency Measure	
(See Table F)				(See Tables G or J)				(See Table H)				(See Table I)		
	<=		OR	12,587	<=	20,640	OR		<=		OR			
			Location in construction documents showing the location for inverters and metering equipment and a pathway for the routing of conduit/ plumbing to the electrical service/ water heating system per §110.10(c).											
Battery storage system design meets the minimum requirements in Joint Appendix JA12 and the minimum energy (kWh)/ power (kW) capacity per Table J.														COMPLIES

D. EXCEPTIONAL CONDITIONS

This table is auto-filled with uneditable comments because of selections made or data entered in tables throughout the form.

STATE OF CALIFORNIA

Solar And Battery

CALIFORNIA ENERGY COMMISSION

CERTIFICATE OF COMPLIANCE			NRCC-SAB-E
Project Name:	Napa Valley College Wine Education Center	**Report Page:**	**(Page 3 of 6)**
Project Address:	2277 Napa Vallejo Highway	**Date Prepared:**	4/13/2023

E. ADDITIONAL REMARKS

This table is includes remarks made by the permit applicant to the Authority Having Jurisdiction.

Performance Simulation Model

F. ALLOCATED SOLAR ZONE

This section does not apply to this project.

G. PERMANENTLY INSTALLED SOLAR PV FOR SOLAR READY EXCEPTION

This section does not apply to this project.

H. PERMANENTLY INSTALLED SOLAR HOT WATER SYSTEMS

This section does not apply to this project.

I. SMART THERMOSTATS AND ALTERNATIVE EFFICIENCY MEASURE FOR SOLAR READY EXCEPTION

This section does not apply to this project.

STATE OF CALIFORNIA

Solar And Battery

CALIFORNIA ENERGY COMMISSION

CERTIFICATE OF COMPLIANCE			NRCC-SAB-E
Project Name:	Napa Valley College Wine Education Center	**Report Page:**	**(Page 4 of 6)**
Project Address:	2277 Napa Vallejo Highway	**Date Prepared:**	4/13/2023

J. PHOTOVOLTAIC (PV) AND BATTERY SYSTEMS

This table documents compliance with prescriptive photovoltaic and battery system requirements in 140.10/ 170.2(g and h). Unless the project meets one of the listed exceptions, or trades-off PV in an energy model using performance path, 140.10/ 170.2(g and h) requires installed photovoltaic and battery systems for newly constructed buildings. The installed PV systems must meet the minimum requirements in Joint Appendix 11.

Photovoltaic (PV) System

01	02	03	04	05	06	07	08
Occupancy	Conditioned Floor Area (ft^2)	Area of New Roof[1] (ft^2)	Roof Area < 70% Solar Access[2] (ft^2)	Plansheet or Document showing Solar Access Calculations	Occupied Roof Area[3] (ft^2)	Solar Access Roof Area (SARA) (ft^2)	Min Size of PV System Required (kWdc)
School or Classroom	7,722	6,254	0	E-305	0	6,254	12.59
						Total Min Size PV System Required for all Spaces (kWdc):	12.59
						Total Size PV System in Design (kWdc):	20.64

[1]FOOTNOTES: Includes the area of the building's roof space capable of structurally supporting a PV system and the area of all roof space on covered parking areas, carports, and all other newly constructed structures on the site that are compatible with supporting a PV system per Title 24, Part 2 Section 1511.2.
[2]Solar access must be determined using CEC approved solar access calculation tools found at https://www.energy.ca.gov/programs-and-topics/programs/building-energy-efficiency-standards/solar-assessment-tools.
[3]As specified by CBC Section 503.1.4.

Battery Storage System

01	02	03	04	05
Space Type	Min Size of PV System Required (kWdc)	Rated Single Charge-Discharge AC Efficiency of Battery System[1]	Min Battery Rated Energy Capacity Required (kWh)	Min Power Capacity of Battery Required (kWdc)
School or Classroom	12.59	95	24.78	5.79
		Total Min Energy (kWh) and Power (kW) Capacity Required	24.78	5.79
		Total Energy (kWh) and Power (kW) Capacity in Design	66	6

[1]FOOTNOTE: Rated single charge-discharge cycle AC to AC (round trip) effieiency of the battery storage system

STATE OF CALIFORNIA

Solar And Battery

CALIFORNIA ENERGY COMMISSION

CERTIFICATE OF COMPLIANCE			NRCC-SAB-E
Project Name:	Napa Valley College Wine Education Center	**Report Page:**	**(Page 5 of 6)**
Project Address:	2277 Napa Vallejo Highway	**Date Prepared:**	4/13/2023

K. DECLARATION OF REQUIRED CERTIFICATES OF INSTALLATION

Form/Title
NRCI-SAB-01-E - Must be submitted for all buildings that must comply with solar readiness or PV/Battery requirements.

L. DECLARATION OF REQUIRED CERTIFICATES OF ACCEPTANCE

There are no forms required for this project.

STATE OF CALIFORNIA

Solar And Battery

CALIFORNIA ENERGY COMMISSION

CERTIFICATE OF COMPLIANCE			NRCC-SAB-E
Project Name:	Napa Valley College Wine Education Center	**Report Page:**	**(Page 6 of 6)**
Project Address:	2277 Napa Vallejo Highway	**Date Prepared:**	4/13/2023

DOCUMENTATION AUTHOR'S DECLARATION STATEMENT

I certify that this Certificate of Compliance documentation is accurate and complete.

Documentation Author Name: Sean Plikuhn	Documentation Author Signature: Sean Plikuhn
Company: SOLDATA Energy Consulting	Signature Date: 2023-04-13
Address: P.O. Box 8579	CEA/ HERS Certification Identification (if applicable):
City/State/Zip: Santa Rosa CA 95407	Phone: 707-545-4440

RESPONSIBLE PERSON'S DECLARATION STATEMENT

I certify the following under penalty of perjury, under the laws of the State of California:

1. The information provided on this Certificate of Compliance is true and correct.
2. I am eligible under Division 3 of the Business and Professions Code to accept responsibility for the building design or system design identified on this Certificate of Compliance (responsible designer)
3. The energy features and performance specifications, materials, components, and manufactured devices for the building design or system design identified on this Certificate of Compliance conform to the requirements of Title 24, Part 1 and Part 6 of the California Code of Regulations.
4. The building design features or system design features identified on this Certificate of Compliance are consistent with the information provided on other applicable compliance documents, worksheets, calculations, plans and specifications submitted to the enforcement agency for approval with this building permit application.
5. I will ensure that a completed signed copy of this Certificate of Compliance shall be made available with the building permit(s) issued for the building, and made available to the enforcement agency for all applicable inspections. I understand that a completed signed copy of this Certificate of Compliance is required to be included with the documentation the builder provides to the building owner at occupancy.

Responsible Designer Name: Carl Servais	Responsible Designer Signature:
Company: TLCD Architecture	Date Signed: 2023-04-13
Address: 520 Third Street #250	License: C-32941
City/State/Zip: Santa Rosa CA 95401	Phone: (707) 525-5600

STATE OF CALIFORNIA

Domestic Water Heating System

CALIFORNIA ENERGY COMMISSION

CERTIFICATE OF COMPLIANCE			NRCC-PLB-E
This document is used to demonstrate compliance for nonresidential occupancies with requirements in 110.1, 110.3, 120.3, and 140.5, and with requirements in 141.0 for additions and alterations, for domestic water heating scopes using the prescriptive path. For high-rise residential and hotel/motel occupancies compliance is demonstrated with requirements in 110.1, 110.3, 160.4 and 170.2(d), and with requirements 180.1 for additions and 180.2 for alterations.			
Project Name:	Napa Valley College Wine Education Center	**Report Page:**	**(Page 1 of 8)**
Project Address:	2277 Napa Vallejo Highway	**Date Prepared:**	4/13/2023

A. GENERAL INFORMATION

01	Project Location (city)	Napa	02	Climate Zone	2
03	Occupancy Types Within Project (select all that apply):				

• Classroom • Convention Center • Office • Support Areas • All Other Occupancies

B. PROJECT SCOPE

This table includes domestic water heating systems that are within the scope of the permit application and are demonstrating compliance using the prescriptive paths outlined in 140./ 170.2(d) and 141.0(a)/ 180.1, or 141.0(b)2N / 180.2 for additions or alterations. Solar water heating systems are documented on the NRCC-SAB compliance document. Combined hydronic water heating systems are documented on the NRCC-MCH compliance document.

01	02	03		
My project consists of (check all that apply):	System Type[1,2]	System Components		
☒ New system (DHW system being installed for the first time in newly constructed building)	Individual System (serving nonresidential spaces)	☒ Equipment	☒ Distribution	☒ Controls
☒ New system (DHW system being installed for the first time in newly constructed building)	Individual System (serving nonresidential spaces)	☒ Equipment	☒ Distribution	☒ Controls
☐ System Alteration (equipment, distribution or controls)		☐ Equipment	☐ Distribution	☐ Controls

[1]FOOTNOTES: Point of use water heaters, or other non-central systems used to serve nonresidential spaces, are considered individual systems.
[2] Dwelling units refers to hotel/motel guest rooms and units in a multifamily residential occupancy.
[3] DHW systems serving 2 or more dwelling units are considered "Central Systems" for multifamily occupancies

C. COMPLIANCE RESULTS

Table C will indicate if the project data input into the compliance document is compliant with water heating requirements. If this table says "DOES NOT COMPLY" or "COMPLIES with Exceptional Conditions" refer to Table D. or the table indicated as not compliant for guidance.

01	02	03	04
Domestic Hot Water Equipment	Distribution Systems	Controls	**Compliance Results**
Table F	Table G	Table H	
Yes	Yes	Yes	COMPLIES

STATE OF CALIFORNIA

Domestic Water Heating System

CALIFORNIA ENERGY COMMISSION

CERTIFICATE OF COMPLIANCE			NRCC-PLB-E
Project Name:	Napa Valley College Wine Education Center	**Report Page:**	**(Page 2 of 8)**
Project Address:	2277 Napa Vallejo Highway	**Date Prepared:**	4/13/2023

D. EXCEPTIONAL CONDITIONS

This table is auto-filled with uneditable comments because of selections made or data entered in tables throughout the form.

E. ADDITIONAL REMARKS

This table includes remarks made by the permit applicant to the Authority Having Jurisdiction.

STATE OF CALIFORNIA

Domestic Water Heating System

CALIFORNIA ENERGY COMMISSION

CERTIFICATE OF COMPLIANCE			NRCC-PLB-E
Project Name:	Napa Valley College Wine Education Center	**Report Page:**	**(Page 3 of 8)**
Project Address:	2277 Napa Vallejo Highway	**Date Prepared:**	4/13/2023

F. DOMESTIC HOT WATER EQUIPMENT

This table is used to demonstrate compliance with mandatory equipment requirements in 110.1 and 110.3. Compliance with prescriptive requirements in 140.5(c) / 170.2(d) must also be demonstrated and with 141.0 / 180.1/ 180.2 for addition and alteration scopes.

Equipment Schedule: Water Heating Efficiency and Standby Loss

03		04		05			06	
System Name	WH-1: 100 gal 96%	Exception to 140.5(c)/ 170.2(d)3		☐	Gas Service Water Heating System >= 1MMBtu/h[1]	Capacity-weighted Average Efficiency %		
07	08	09	10		11	12	13	14	15
Name or Item Tag	Equipment Type	Volume (gal)	Rated Input Capacity (Btu/h)	Max GPM/ First Hour Rating (FHR)	Rated Efficiency	Minimum Efficiency Required	Efficiency Unit	Designed Standby Loss	Maximum Standby Loss
WH-1: 100 gal 96%	Commercial Package Gas Hot Water Supply Boilers (300k - <1MMBtu/h)	100	250,000	FHR >=75	0.96	0.57	UEF		

03		04		05			06	
System Name	WH-2: 30 g 10kW	Exception to 140.5(c)/ 170.2(d)3		☐	Gas Service Water Heating System >= 1MMBtu/h[1]	Capacity-weighted Average Efficiency %		
07	08	09	10		11	12	13	14	15
Name or Item Tag	Equipment Type	Volume (gal)	Rated Input Capacity (Btu/h)	Max GPM/ First Hour Rating (FHR)	Rated Efficiency	Minimum Efficiency Required	Efficiency Unit	Designed Standby Loss	Maximum Standby Loss
WH-2: 30 g 10kW	Consumer Rated Electric Storage	30	30,717	FHR >=75	0.92	0.93	UEF		

[1]FOOTNOTE: In systems >= 1MMBtu/h with multiple units, gas water heaters with input capacity > 100,000 Btu/h may meet 90% Et requirements via an input capacity-weighted average.

STATE OF CALIFORNIA

Domestic Water Heating System

CALIFORNIA ENERGY COMMISSION

CERTIFICATE OF COMPLIANCE			NRCC-PLB-E
Project Name:	Napa Valley College Wine Education Center	**Report Page:**	**(Page 4 of 8)**
Project Address:	2277 Napa Vallejo Highway	**Date Prepared:**	4/13/2023

F. DOMESTIC HOT WATER EQUIPMENT

Water Heating Equipment All Occupancies

	Yes	No	Not Applicable	Requirement
18	☐	☐	☒	Unfired storage tank insulation shall have Internal + External >=R-16 OR External >=R-3.5. Label required per 110.3(c)3
19	☐	☐	☒	New state buildings 60% of energy for service water heating from site solar energy or recovered energy per 110.3(c)5
20	☐	☐	☒	Isolation valves for instantaneous water heater with input rating >6.8 kBTUH or 2 kW has been specified per 110.3(c)6
21	☐	☐	☒	School buildings < 25,000 ft^2 and < 4 stories must install a heat pump water heating system per 140.5(a)1. Water heating systems serving an individual bathroom space may be an instantaneous electric water heater.

STATE OF CALIFORNIA

Domestic Water Heating System

CALIFORNIA ENERGY COMMISSION

CERTIFICATE OF COMPLIANCE			NRCC-PLB-E
Project Name:	Napa Valley College Wine Education Center	**Report Page:**	**(Page 5 of 8)**
Project Address:	2277 Napa Vallejo Highway	**Date Prepared:**	4/13/2023

G. DOMESTIC HOT WATER DISTRIBUTION SYSTEM

This table is used to demonstrate compliance for nonresidential occupancies with distribution requirements in 120.3 and 140.5. For multifamily and hotel/motel occupancies, compliance is demonstrated with requirements 110.3(c), 160.4, 170.2(d).

Mandatory Pipe Insulation All Occupancies

13	☐	For systems serving dwelling units, pipe insulation must meet the minimum insulation requirements in Table 160.4-A (see blow) except: • Piping that penetrates framing members shall not be required to have pipe insulation for the distance of the framing penetration. Piping that penetrates metal framing shall use grommets, plugs, wrapping or other insulating material to assure that no contact is made with the metal framing. Insulation shall abut securely against all framing members • Piping installed in interior or exterior walls shall not be required to have pipe insulation if all of the requirements are met for compliance with Quality Insulation Installation (QII) as specified in the Reference Residential Appendix RA3.5. • Piping surrounded with a minimum of 1 inch of wall insulation, 2 inches of crawlspace insulation, or 4 inches of attic insulation, shall not be required to have pipe insulation.
14	☒	For systems serving nonresidential spaces, pipe insulation for the following applications is specified to comply with Table 120.3-A (see below) per 120.3: • Recirculating system piping, including supply and return piping of the water heater • The first 8 ft of hot and cold outlet piping, including between storage tank and heat trap, for a nonrecirculating storage system • Pipes that are externally heated
15	☐	Insulation shall be protected from damage, including that due to sunlight, moisture, equipment maintenance, and wind. Insulation exposed to weather shall be installed with a cover suitable for outdoor service per 120.3(b) / 160.4(f). Pipe insulation buried below grade must be installed in a water proof and non-crushable casing or sleeve.

TABLE 120.3-A / 160.4-A PIPE INSULATION THICKNESS

Fluid Temperature Range (°F)	Conductivity Range (Btu-in per hour per ft^2 per °F)	Insulation Mean Rating Temp (°F)	Nominal Pipe Diameter (in)			
			< 1	1 to < 1.5	1.5 to < 4	1.5 to < 4 Multifamily & Hotel/Motel
			Minimum Insulation Required			
105-140	0.22 - 0.28	100	1.0 in or R-7.7	1.5 in or R-12.5	1.5 in or R-11	2.0 in or R-16

STATE OF CALIFORNIA

Domestic Water Heating System

CALIFORNIA ENERGY COMMISSION

CERTIFICATE OF COMPLIANCE			NRCC-PLB-E
Project Name:	Napa Valley College Wine Education Center	**Report Page:**	**(Page 6 of 8)**
Project Address:	2277 Napa Vallejo Highway	**Date Prepared:**	4/13/2023

H. DOMESTIC HOT WATER CONTROLS

This table is used to demonstrate compliance with control requirements in 110.3 for all occupancies. For multifamily residential and hotel/motel occupancies, compliance is also demonstrated with requirements in 160.4(e) / 170.2(d).

	Yes	No	Not Applicable	Requirement
01	☒	☐	☐	Construction documents require manufacturer certification that service water-heating systems are equipped with automatic temperature controls capable of adjusting temperature settings per 110.3(a).
02	☒	☐	☐	Systems with capacity > 167,000 BTUH equipped with outlet temperature controls per 110.3(c)1 unless covered by California Plumbing Code 613.0.
03	☐	☐	☒	Controls for circulating pumps or electrical heat trace systems are capable of automatically turning off the system per §110.3(c)2 unless systems serves healthcare facility.
04	☐	☐	☒	For recirculation systems serving multiple dwelling units, design includes automatic pump controls per 170.2(d) or 180.1(b)3 for additions.
05	☐	☐	☒	For recirculation systems serving individual dwelling units, design includes manual on/off controls as specified in Reference Appendix RA4.4.9 per 170.2(d).
06	☐	☐	☒	Combustion air positive shut-off shall be provided per 160.4(3).on all newly installed commercial boilers as follows: • Boilers with input capacity >= 2.5 MMBtu/h, in which the boiler is designed to operate with a nonpositive vent static pressure • Boilers where one stack serves two or more boilers with a total combined input capacity per stack of 2.5 MMBtu/h.
07	☐	☐	☒	Boiler combustion air fans with motor >= 10 hp shall meet one of the following • The fan motor shall be driven by a variable speed drive OR • The fan motor shall include controls that limit the fan motor demand to <=30% of the total design wattage at 50% of the design air volume.
08	☐	☐	☒	Newly installed boilers with an input capacity {d:gte/} 5MMBtu/h and a steady state full-load combustion efficiency < 90% shall maintain excess (stack-gas) oxygen concentrations <= 5% by volume on a dry basis over firing rates of 20-100%. Combustion air volume shall be controlled with respect to firing rate or flue gas oxygen concentration. Use of a common gas and combustion air control linkage or jack shaft is prohibited.

I. DECLARATION OF REQUIRED CERTIFICATES OF INSTALLATION

Form/Title
NRCI-PLB-E - Must be submitted for all buildings

STATE OF CALIFORNIA

Domestic Water Heating System

CALIFORNIA ENERGY COMMISSION

CERTIFICATE OF COMPLIANCE			NRCC-PLB-E
Project Name:	Napa Valley College Wine Education Center	**Report Page:**	**(Page 7 of 8)**
Project Address:	2277 Napa Vallejo Highway	**Date Prepared:**	4/13/2023

J. DECLARATION OF REQUIRED CERTIFICATES OF ACCEPTANCE

There are no forms required for this project.

K. DECLARATION OF REQUIRED CERTIFICATES OF VERIFICATION

There are no forms required for this project.

STATE OF CALIFORNIA

Domestic Water Heating System

CALIFORNIA ENERGY COMMISSION

CERTIFICATE OF COMPLIANCE			NRCC-PLB-E
Project Name:	Napa Valley College Wine Education Center	**Report Page:**	**(Page 8 of 8)**
Project Address:	2277 Napa Vallejo Highway	**Date Prepared:**	4/13/2023

DOCUMENTATION AUTHOR'S DECLARATION STATEMENT

I certify that this Certificate of Compliance documentation is accurate and complete.

Documentation Author Name: Sean Plikuhn	Documentation Author Signature: Sean Plikuhn
Company: SOLDATA Energy Consulting	Signature Date: 2023-04-13
Address: P.O. Box 8579	CEA/ HERS Certification Identification (if applicable):
City/State/Zip: Santa Rosa CA 95407	Phone: 707-545-4440

RESPONSIBLE PERSON'S DECLARATION STATEMENT

I certify the following under penalty of perjury, under the laws of the State of California:

1. The information provided on this Certificate of Compliance is true and correct.
2. I am eligible under Division 3 of the Business and Professions Code to accept responsibility for the building design or system design identified on this Certificate of Compliance (responsible designer)
3. The energy features and performance specifications, materials, components, and manufactured devices for the building design or system design identified on this Certificate of Compliance conform to the requirements of Title 24, Part 1 and Part 6 of the California Code of Regulations.
4. The building design features or system design features identified on this Certificate of Compliance are consistent with the information provided on other applicable compliance documents, worksheets, calculations, plans and specifications submitted to the enforcement agency for approval with this building permit application.
5. I will ensure that a completed signed copy of this Certificate of Compliance shall be made available with the building permit(s) issued for the building, and made available to the enforcement agency for all applicable inspections. I understand that a completed signed copy of this Certificate of Compliance is required to be included with the documentation the builder provides to the building owner at occupancy.

Responsible Designer Name:	Responsible Designer Signature: Tim Souza (Digitally signed by Tim Souza; DN: C=US, E=TimS@TEP.NET, O=TEP Engineering, CN=Tim Souza; Reason: I agree to the terms defined by the placement of my signature on this document; Date: 2023.04.13 11:54:37-07'00')
Company: TEP Engineers	Date Signed: 2023-04-13
Address: 880 Second Street	License: M29511
City/State/Zip: Santa Rosa CA 95404	Phone: (707) 308-4205

AGENCY APPROVAL STAMP:

IDENTIFICATION STAMP
DIV. OF THE STATE ARCHITECT
APP: 01-120890 INC:
REVIEWED FOR
SS ☑ FLS ☑ ACS ☑
DATE: 10/25/2023

TLCDARCHITECTURE
520 Third St. #250
Santa Rosa, CA 95401
o: 707.525.5600
f: 707.525.5616
tlcd.com

CONSULTANT:

STAMP:

LICENSED ARCHITECT
CARL SERVAIS
C-32941
REN:12/31/23
STATE OF CALIFORNIA

REVISIONS:

Number	Date	Description

NAPA VALLEY COLLEGE WINE EDUCATION CENTER

2277 NAPA VALLEJO HWY NAPA, CA 94558

NAPA VALLEY COLLEGE

DSA APPLICATION NUMBER: 01-120890

TLCD PROJECT NUMBER: 21062.00

DATE: 04/12/2023

© THESE DRAWINGS ARE INSTRUMENTS OF SERVICE AND ARE THE SOLE PROPERTY OF TLCD ARCHITECTURE. ANY USE WITHOUT WRITTEN CONSENT IS PROHIBITED.

TITLE 24 ENERGY COMPLIANCE

G-007

10/2/2023 2:54:02 PM

STATE OF CALIFORNIA
Outdoor Lighting
CALIFORNIA ENERGY COMMISSION

CERTIFICATE OF COMPLIANCE		NRCC-LTO-E
Project Name:	Napa Valley College Wine Education Center	Report Page: (Page 1 of 10)
Project Address:	2277 Napa Vallejo Highway	Date Prepared: 4/13/2023

This document is used to demonstrate compliance with requirements in 110.9, 130.0, 130.2, 140.7, and 141.0(b)2L for outdoor lighting scopes using the prescriptive path for nonresidential and hotel/motel occupancies. It is also used to document compliance with requirements in 160.5, 170.2(e)6, 180.1(a) and 180.2(b)4Bv for outdoor lighting scopes using the prescriptive path for multifamily and mixed-use occupancies. Multifamily includes dormitory and senior living facilities.

A. GENERAL INFORMATION

01	Project Location (city)	Napa	04 Total Illuminated Hardscape Area (ft²)	9404
02	Climate Zone	2		
03	Outdoor Lighting Zone per Title 24 Part 1	10.114 or as designated by Authority Having Jurisdiction (AHJ):		

☐ LZ-0: Very Low - Undeveloped Parkland ☐ LZ-2: Moderate - Urban Clusters ☐ LZ-4: High - Must be reviewed by CA Energy Commission for Approval
☐ LZ-1: Low - Rural Areas ☒ LZ-3: Moderately High - Urban Areas

05 Occupancy Types within Project

● Classroom ● Convention Center ● Office ● Support Areas ● Warehouse

B. PROJECT SCOPE

This table includes outdoor lighting systems that are within the scope of the permit application and are demonstrating compliance using the prescriptive path outlined in 140.7 / 170.2(e)6 or 141.0(b)2L / 180.2(b)4Bv for alterations.

My Project Consists of:

01	02		
☒ New Lighting System	Must Comply with Allowances from 140.7 / 170.2(e)6		
☐ Altered Lighting System	Is your alteration increasing the connected lighting load (Watts)?	Yes	No
	03	04	05
	% of Existing Luminaires Being Altered[1]	Sum Total of Luminaires Being Added or Altered	Calculation Method
	☐ < 10% ☐ >= 10% and < 50% ☐ >= 50%		

Please proceed to Table F. Outdoor Lighting Fixture Schedule to define the project's luminaires.

[1] FOOTNOTES: % of Existing Luminaires Being Altered = (Sum Total of Luminaires Being Added or Altered / Existing Luminaires within the Scope of the Permit Application) x 100.

STATE OF CALIFORNIA
Outdoor Lighting
CALIFORNIA ENERGY COMMISSION

CERTIFICATE OF COMPLIANCE		NRCC-LTO-E
Project Name:	Napa Valley College Wine Education Center	Report Page: (Page 2 of 10)
Project Address:	2277 Napa Vallejo Highway	Date Prepared: 4/13/2023

C. COMPLIANCE RESULTS

Results in this table are automatically calculated from data input and calculations in Tables F through N. Note: If any cell on this table says "COMPLIES with Exceptional Conditions" refer to Table D. Exceptional Conditions for guidance or see applicable Table referenced below.

Calculations of Total Allowed Lighting Power (Watts) 140.7 / 170.2(e)6 or 141.0(b)2L / 180.2(b)4Bv														Compliance Results
01		02		03		04		05		06		07	08	09
General Hardscape Allowance 140.7(j11) / 170.2(e)6 (See Table I)	+	Per Application 140.7(d2) / 170.2(e)6 (See Table J)	+	Sales Frontage 140.7(d2 (See Table K)	+	Ornamental 140.7(d2) / 170.2(e)6 (See Table L)	+	Per Specific Area 140.7(d2) / 170.2(e)6 (See Table M)	OR	Existing Power Allowance 141.0(b)2L / 180.2(b)4Bv (See Table N)	=	**Total Allowed** (Watts)	≥ **Total Actual** (Watts)	**07 must be >= 08**
677	+	48	+	---	+	---	+	255.9	OR	---	=	981	> 975	COMPLIES
Shielding Compliance (See Table G for Details):														N/A
Controls Compliance (See Table H for Details):														COMPLIES

D. EXCEPTIONAL CONDITIONS

This table is auto-filled with uneditable comments because of selections made or data entered in tables throughout the form.

E. ADDITIONAL REMARKS

This table includes remarks made by the permit applicant to the Authority Having Jurisdiction.

STATE OF CALIFORNIA
Outdoor Lighting
CALIFORNIA ENERGY COMMISSION

CERTIFICATE OF COMPLIANCE		NRCC-LTO-E
Project Name:	Napa Valley College Wine Education Center	Report Page: (Page 3 of 10)
Project Address:	2277 Napa Vallejo Highway	Date Prepared: 4/13/2023

F. OUTDOOR LIGHTING FIXTURE SCHEDULE

For new or altered lighting systems demonstrating compliance with 140.7 / 170.2(e)6 all new luminaires being installed and any existing luminaires remaining or being moved within the spaces covered by the permit application are included in the Table below. For altered lighting systems using the Existing Power method per 141.0(b)2L only new luminaires being installed and replacement luminaires being installed as part of the project scope are included (ie, existing luminaires remaining or existing luminaires being moved are not included). Outdoor lighting attached to multifamily buildings and controlled from the inside of a dwelling unit are included in Table H. and are not included here. All other multifamily outdoor lighting is included here.

Designed Wattage:

01	02		03	04	05	06	07	08	09	10	
Name or Item Tag	Complete Luminaire Description		Watts per luminaire[1, 2]	How is Wattage determined	Total Number Luminaires[2]	Luminaire Status[3]	Excluded per 140.7(a) / 170.2(e)6A	Design Watts	Cutoff Req. > 6,200 initial lumen output 130.2(b) / 160.5(c)1[4]	Field Inspector	
										Pass	Fail
AC1	AC1: 24w LED, 4.5" rec downlt	☐ Linear	24	Mfr. Spec	6	New	☐	144	NA; < 6200 lumens	☐	☐
AF1	AF1: 12w LED, 4.5" rec downlt	☐ Linear	12	Mfr. Spec	8	New	☐	96	NA; < 6200 lumens	☐	☐
AF2	AF2: 12w LED, 4.5" rec downlt	☐ Linear	12	Mfr. Spec	2	New	☐	24	NA; < 6200 lumens	☐	☐
AG1	AG1: 38w LED, wall, uplight	☐ Linear	38	Mfr. Spec	2	New	☐	76	NA; < 6200 lumens	☐	☐
BA1	BA1: 25w LED, surface, area	☐ Linear	25	Mfr. Spec	10	New	☐	250	NA; < 6200 lumens	☐	☐
BA1	BA1: 25w LED, surface, area	☐ Linear	25	Mfr. Spec	3	New	☒	---	NA; < 6200 lumens	☐	☐
BA2	BA2: 25w LED, surface, area	☐ Linear	25	Mfr. Spec	7	New	☐	175	NA; < 6200 lumens	☐	☐
BD1	BD1: 34w LED, ground, flood	☐ Linear	34	Mfr. Spec	3	New	☒	---	NA; < 6200 lumens	☐	☐
BE1	BE1: 35w LED, pole, single head	☐ Linear	35	Mfr. Spec	2	New	☐	70	NA; < 6200 lumens	☐	☐

STATE OF CALIFORNIA
Outdoor Lighting
CALIFORNIA ENERGY COMMISSION

CERTIFICATE OF COMPLIANCE		NRCC-LTO-E
Project Name:	Napa Valley College Wine Education Center	Report Page: (Page 4 of 10)
Project Address:	2277 Napa Vallejo Highway	Date Prepared: 4/13/2023

F. OUTDOOR LIGHTING FIXTURE SCHEDULE

For new or altered lighting systems demonstrating compliance with 140.7 / 170.2(e)6 all new luminaires being installed and any existing luminaires remaining or being moved within the spaces covered by the permit application are included in the Table below. For altered lighting systems using the Existing Power method per 141.0(b)2L only new luminaires being installed and replacement luminaires being installed as part of the project scope are included (ie, existing luminaires remaining or existing luminaires being moved are not included). Outdoor lighting attached to multifamily buildings and controlled from the inside of a dwelling unit are included in Table H. and are not included here. All other multifamily outdoor lighting is included here.

Designed Wattage:

01	02		03	04	05	06	07	08	09	10
BE3	BE3: 35w LED, pole, single head	☐ Linear	35	Mfr. Spec	1	New	☐	35	NA; < 6200 lumens	☐ ☐
BF1	BF1: 15w LED, bollard	☐ Linear	15	Mfr. Spec	7	New	☐	105	NA; < 6200 lumens	☐ ☐
								Total Design Watts:	975	

* NOTES: Selections with a * require a note in the space below explaining how compliance is achieved.
EX: Luminaire is lighting a statue; EXCEPTION 2 to 130.2(b)

[1] FOOTNOTES: Authority Having Jurisdiction may ask for Luminaire cut sheets to confirm wattage used for compliance per 130.0(c) / 160.5(b)
[2] For linear luminaires, wattage should be indicated as W/lf instead of Watts/luminaire. Total linear feet should be indicated in column 05 instead of number of luminaires.
[3] Select "New" for new luminaires in a new outdoor lighting project, or for added luminaires in an alteration. Select "Altered" for replacement luminaires in an alteration. Select "Existing to Remain" for existing luminaires within the project scope that are not being altered and are remaining. Select "Existing Reinstalled" for existing luminaires which are being removed and reinstalled as part of the project scope.
[4] Compliance with mandatory shielding requirements is required for luminaires with initial lumen output >= 6,200 unless exempted by 130.2(b)/ 160.5(c)

G. SHIELDING REQUIREMENTS (BUG)

This section does not apply to this project.

STATE OF CALIFORNIA
Outdoor Lighting
CALIFORNIA ENERGY COMMISSION

CERTIFICATE OF COMPLIANCE		NRCC-LTO-E
Project Name:	Napa Valley College Wine Education Center	Report Page: (Page 5 of 10)
Project Address:	2277 Napa Vallejo Highway	Date Prepared: 4/13/2023

H. OUTDOOR LIGHTING CONTROLS

This table demonstrates compliance with controls requirements for all new or altered luminaires installed as part of the permit application. For alteration projects, luminaires which are existing to remain (ie untouched) and luminaires which are removed and reinstalled (wiring only) do not need to be included in this table even if they are within the spaces covered by the permit application.
Outdoor lighting for nonresidential buildings, parking garages and common service areas in multifamily buildings must be documented separately from outdoor lighting attached to multifamily buildings and controlled from the inside of a dwelling unit

Mandatory Controls for Nonresidential Occupancies, Parking Garages & Common Areas in Multifamily Buildings

01	02	03	04	05	
Area Description	Shut-Off 130.2(c)1 / 160.5(c)	Auto-Schedule 130.2(c)2 / 160.5(c)	Motion Sensor 130.2(c)3 / 160.5(c)	Field Inspector	
				Pass	Fail
Pedestrian Circulation	Photocontrol	Provided	NA: Each Luminaire < 40 Watts	☐	☐
Pedestrian Paths	Photocontrol	Provided	NA: Each Luminaire < 40 Watts	☐	☐
Canopy	Photocontrol	Provided	NA: Each Luminaire < 40 Watts	☐	☐
Utility	Photocontrol	Provided	NA: Each Luminaire < 40 Watts	☐	☐

[1] FOOTNOTE: Text has been abbreviated, please refer to Table 160.5-A to confirm compliance with the specific light source technologies listed.
[2] Authority having jurisdiction may ask for cutsheets or other documentation to confirm compliance of light source.
[3] Recessed luminaires marked for use in fire-rated installations, and recessed luminaires installed in non-insulated ceilings are excepted from ii and iii.

STATE OF CALIFORNIA
Outdoor Lighting
CALIFORNIA ENERGY COMMISSION

CERTIFICATE OF COMPLIANCE		NRCC-LTO-E
Project Name:	Napa Valley College Wine Education Center	Report Page: (Page 6 of 10)
Project Address:	2277 Napa Vallejo Highway	Date Prepared: 4/13/2023

I. LIGHTING POWER ALLOWANCE (per 140.7 / 170.2(e))

This table includes areas using allowance calculations per 140.7 / 170.2(e). General Hardscape Allowance is per Table 140.7-A/Table 170.2-R while "Use it or lose it" Allowances are per Table 140.7-B /Table 170.2-S. Indicate which allowances are being used to expand sections for user input. Luminaires that qualify for one of the "Use it or lose it" allowances shall not qualify for another "Use it or lose it" allowance.
Outdoor lighting attached to multifamily buildings and controlled from the inside of a dwelling unit are included in Table H. and are not included here. All other multifamily outdoor lighting is included here.

02	03	04	05	01			
				"Use it or lose it" Allowance (select all that apply) (select all that apply)			
☒ General Hardscape Allowance Table I (below)				☒ Per Application Table J	☐ Sales Frontage Table K	☐ Ornamental Table L	☒ Per Specific Area Table M

Calculated General Hardscape Lighting Power Allowance per Table 140.7-A for Nonresidential & Hotel/Motel

02	03	04	05	06	07	08	09
Area Description	Area Wattage Allowance (AWA)			Linear Wattage Allowance (LWA)			Total General AWA + LWA (Watts)
	Illuminated Area (ft²)	Allowed Density (W/ft²)	Area Allowance (Watts)	Perimeter Length (lf)	Allowed Density (W/lf)	Linear Allowance (Watts)	
Pedestrian	1277	0.021	26.8	196	0.2	39.2	66
Ped Transformer	1323	0.021	27.8	147	0.2	29.4	57
Ped Childcare	968	0.021	20.3	121	0.2	24.2	45
Ped WEC	4010	0.021	84.2	352	0.2	70.4	155
Ped phase 2	405	0.021	8.5	84	0.2	16.8	25
						Initial Wattage Allowance for Entire Site (Watts):	250
						Instances of Initial Wattage Allowance (LZ 0 only)[1]	
						Total General Hardscape Allowance (Watts):	677

STATE OF CALIFORNIA
Outdoor Lighting
CALIFORNIA ENERGY COMMISSION

CERTIFICATE OF COMPLIANCE		NRCC-LTO-E
Project Name:	Napa Valley College Wine Education Center	Report Page: (Page 7 of 10)
Project Address:	2277 Napa Vallejo Highway	Date Prepared: 4/13/2023

J. LIGHTING ALLOWANCE: PER APPLICATION

This table includes areas using the wattage allowance per application from Table 140.7-B / Table 170.2-S.

01	02	03	04	05	06	07	08	09	10
Area Description	Application per Table 140.7-B[1]	CALCULATED ALLOWANCE (Watts)			DESIGN WATTS				Additional Allowance (Watts)
		# of Locations	Allowance per Location[2]	Extra Allowance (Watts)	Luminaire Name or Item Tag	Watts per Luminaire	# of Luminaires	Design Watts	
Entry 3' phase 1	Building Entrance/Exit	4	19	76	AF1	12	2	24	48
					AF2	12	2	24	
							Total Design Watts for this Area:	48	
							Total Allowance (Watts) All Areas:	48	

[1] FOOTNOTES: Primary entrance applications are only available for senior care facilities, healthcare facilities, police stations, hospitals, fire stations, and emergency vehicle facilities.
[2] The Allowance per Location for ATMs is 100W for the first ATM and 35W for each additional per Table 140.7-B /Table 170.2-S.
[3] For luminaires indicated in Table F as linear, wattage in column 07 is W/lf instead of Watts/luminaire. Total linear feet should be indicated in column 08 instead of number of luminaires.

K. LIGHTING ALLOWANCE: SALES FRONTAGE

This section does not apply to this project.

L. LIGHTING ALLOWANCE: ORNAMENTAL

This section does not apply to this project.

STATE OF CALIFORNIA
Outdoor Lighting
CALIFORNIA ENERGY COMMISSION

CERTIFICATE OF COMPLIANCE		NRCC-LTO-E
Project Name:	Napa Valley College Wine Education Center	Report Page: (Page 8 of 10)
Project Address:	2277 Napa Vallejo Highway	Date Prepared: 4/13/2023

M. LIGHTING ALLOWANCE: PER SPECIFIC AREA

This table includes areas using the wattage allowance per specific area from Table 140.7-B /Table 170.2-S. More than one specific area allowance may be taken in a single project, if applicable. However, multiple specific area allowances may not be taken for the exact same area on the site.

01	02	03	04	05	06	07	08	09	10
Area Description	Specific Area Type per Table 140.7-B	CALCULATED ALLOWANCE (Watts)			DESIGN WATTS				Additional Allowance (Watts)
		Specific Area (ft²)[1]	Allowed Density (W/ft²)	Extra Allowance (Watts)	Luminaire Name or Item Tag	Watts per Luminaire	# of Luminaires	Design Watts	
Connector Canopy	NonSalesCanopy	740	0.3	199.8	AF1	12	6	72	72
							Total Design Watts for this Area:	72	
Patio Canopy	NonSalesCanopy	604	0.3	163.1	AC1	24	6	144	163.1
					AG1	38	2	76	
							Total Design Watts for this Area:	220	
Patio Canopy	NonSalesCanopy	77	0.3	20.8	BA1	25	1	25	20.8
							Total Design Watts for this Area:	25	
							Total Allowance (Watts) All Areas:	255.9	

[1] FOOTNOTES: See Table 140.7-B /Table 170.2-S for rules for calculating the specific areas (ft²) for these additional lighting allowances.
[2] For luminaires indicated in Table F as linear, wattage in column 07 is W/lf instead of Watts/luminaire. Total linear feet should be indicated in column 08 instead of number of luminaires.

N. EXISTING CONDITIONS POWER ALLOWANCE (alterations only)

This section does not apply to this project.

STATE OF CALIFORNIA
Outdoor Lighting
CALIFORNIA ENERGY COMMISSION

CERTIFICATE OF COMPLIANCE		NRCC-LTO-E
Project Name:	Napa Valley College Wine Education Center	Report Page: (Page 9 of 10)
Project Address:	2277 Napa Vallejo Highway	Date Prepared: 4/13/2023

O. DECLARATION OF REQUIRED CERTIFICATES OF INSTALLATION

Form/Title
NRCI-LTO-E - Must be submitted for all buildings

P. DECLARATION OF REQUIRED CERTIFICATES OF ACCEPTANCE

Form/Title	Systems/Spaces To Be Field Verified
NRCA-LTO-02-A - Must be submitted for all outdoor lighting controls except for alterations where controls are added to <= 20 luminaires.	Pedestrian Circulation; Pedestrian Paths; Canopy; Utility;

STATE OF CALIFORNIA
Outdoor Lighting
CALIFORNIA ENERGY COMMISSION

CERTIFICATE OF COMPLIANCE		NRCC-LTO-E
Project Name:	Napa Valley College Wine Education Center	Report Page: (Page 10 of 10)
Project Address:	2277 Napa Vallejo Highway	Date Prepared: 4/13/2023

DOCUMENTATION AUTHOR'S DECLARATION STATEMENT

I certify that this Certificate of Compliance documentation is accurate and complete.

Documentation Author Name: Sean Plikuhn	Documentation Author Signature: Sean Plikuhn	Digitally signed by Sean Plikuhn DN: cn=Sean Plikuhn, o=SOLDATA Energy Consulting, ou=Energy Consultant, email=sean@soldata-ecc.com	
Company: SOLDATA Energy Consulting	Signature Date: 2023-04-13		
Address: P.O. Box 8579	CEA/ HERS Certification Identification (if applicable):		
City/State/Zip: Santa Rosa CA 95407	Phone: 707-545-4440		

RESPONSIBLE PERSON'S DECLARATION STATEMENT

I certify the following under penalty of perjury, under the laws of the State of California:

1. The information provided on this Certificate of Compliance is true and correct.
2. I am eligible under Division 3 of the Business and Professions Code to accept responsibility for the building design or system design identified on this Certificate of Compliance (responsible designer)
3. The energy features and performance specifications, materials, components, and manufactured devices for the building design or system design identified on this Certificate of Compliance conform to the requirements of Title 24, Part 1 and Part 6 of the California Code of Regulations.
4. The building design features or system design features identified on this Certificate of Compliance are consistent with the information provided on other applicable compliance documents, worksheets, calculations, plans and specifications submitted to the enforcement agency for approval with this building permit application.
5. I will ensure that a completed signed copy of this Certificate of Compliance shall be made available with the building permit(s) issued for the building, and made available to the enforcement agency for all applicable inspections. I understand that a completed signed copy of this Certificate of Compliance is required to be included with the documentation the builder provides to the building owner at occupancy.

Responsible Designer Name: O'Mahony & Myer, Inc.	Responsible Designer Signature:	Date Signed: 2023-04-13	
Address: 4340 Redwood Highway, #245		E14738	
City/State/Zip: San Rafael CA 94903		Phone: (415) 492-0420	

AGENCY APPROVAL STAMP:

IDENTIFICATION STAMP
DIV. OF THE STATE ARCHITECT
APP: 01-120890 INC:
REVIEWED FOR
SS ☑ FLS ☑ ACS ☑
DATE: 10/25/2023

TLCDARCHITECTURE
520 Third St. #250
Santa Rosa, CA 95401
o: 707.525.5600
f: 707.525.5616
tlcd.com

CONSULTANT:

STAMP:

LICENSED ARCHITECT
CARL SERTARI
C-32047
REN:12/31/23
STATE OF CALIFORNIA

REVISIONS:

Number	Date	Description

NAPA VALLEY COLLEGE WINE EDUCATION CENTER
2277 NAPA VALLEJO HWY
NAPA, CA 94558

NAPA VALLEY COLLEGE

DSA APPLICATION NUMBER: 01-120890
TLCD PROJECT NUMBER: 21062.00
DATE: 04/12/2023

TITLE 24 ENERGY COMPLIANCE

G-008

© THESE DRAWINGS ARE INSTRUMENTS OF SERVICE AND ARE THE SOLE PROPERTY OF TLCD ARCHITECTURE. ANY USE WITHOUT WRITTEN CONSENT IS PROHIBITED.

10/2/2023 2:54:03 PM

Attachment 1

2019 CALIFORNIA GREEN BUILDING STANDARDS CODE

Division of the State Architect – Structural Safety (DSA-SS)
(CCR, Title 24, Part 11)

CHAPTER 3 – GREEN BUILDING

SECTION 301 – GENERAL

301.4 Mandatory measures for public schools and community colleges. [DSA-SS] New building construction and site work on a new or existing site shall comply with Section 301.4.

301.4.1 Building and site construction on a new site shall comply with Chapter 5 as adopted by DSA-SS.

301.4.2 Work on an existing site shall comply with Section 301.4.2.

301.4.2.1 Newly constructed site work shall comply with Chapter 5 as adopted by DSA-SS.

301.4.2.2 Newly constructed buildings shall comply with Chapter 5 as adopted by DSA-SS and Section 301.4.3.

301.4.2.3 Additions to existing buildings shall comply with Section 301.4.3.

301.4.2.4 Rehabilitated landscape areas shall comply with Sections 5.304.6 and 5.106.12.

301.4.3 Minimum rehabilitated landscape area requirement. A minimum rehabilitated landscape area equal to 75 percent of the footprint area of the building shall comply with Section 5.304.6 and Section 106.12. New buildings or additions to existing buildings less than 1,600 square feet shall not be required to comply with Section 301.4.3.

CHAPTER 5 – NONRESIDENTIAL MANDATORY MEASURES

DIVISION 5.1 – PLANNING AND DESIGN

SECTION 5.106 – SITE DEVELOPMENT

5.106.4.2 Bicycle parking. [DSA-SS] For public schools and community colleges, comply with Sections 5.106.4.2.1 and 5.106.4.2.2.

☑ **5.106.4.2.1 Student bicycle parking.** Provide permanently anchored bicycle racks conveniently accessed with a minimum of four two-bike capacity racks per new building.

☑ **5.106.4.2.2 Staff bicycle parking.** Provide permanent secure bicycle parking conveniently accessed with a minimum of two staff bicycle parking spaces per new building. Acceptable parking facilities shall be convenient from the street or staff parking area and shall meet one of the following:

1. Covered, lockable enclosures with permanently anchored racks for bicycles;
2. Lockable bicycle rooms with permanently anchored racks; or
3. Lockable, permanently anchored bicycle lockers.

☐ **5.106.5.3 Electric vehicle (EV) charging. [N]** Construction shall comply with Section 5.106.5.3.1 or Section 5.106.5.3.2 to facilitate future installation of electric vehicle supply equipment (EVSE). When EVSE(s) is/are installed, it shall be in accordance with the

California Building Code, the *California Electrical Code* and as follows:

☐ **5.106.5.3.1 Single charging space requirements. [N]** When only a single charging space is required per Table 5.106.5.3.3, a raceway is required to be installed at the time of construction and shall be installed in accordance with the *California Electrical Code.* Construction plans and specifications shall include, but are not limited to, the following:

1. The type and location of the EVSE.
2. A listed raceway capable of accommodating a 208/240-volt dedicated branch circuit.
3. The raceway shall not be less than trade size 1 inch.
4. The raceway shall originate at a service panel or a subpanel serving the area, and shall terminate in close proximity to the proposed location of the charging equipment and into a listed suitable cabinet, box, enclosure or equivalent.
5. The service panel or subpanel shall have sufficient capacity to accommodate a minimum 40-amprere dedicated branch circuit for the future installation of the EVSE.

☐ **5.106.5.3.2 Multiple charging space requirements. [N]** When multiple charging spaces are required per Table 5.106.5.3.3 raceway(s) is/are required to be installed at the time of construction and shall be installed in accordance with the *California Electrical Code.* Construction plans and specifications shall include, but are not limited to, the following:

1. The type and location of the EVSE.
2. The raceway(s) shall originate at a service panel or a subpanel(s) serving the area, and shall terminate in close proximity to the proposed location of the charging equipment and into listed suitable cabinet(s), box(es), enclosure(s) or equivalent.
3. Plan design shall be based upon 40-amprere minimum branch circuits.
4. Electrical calculations shall substantiate the design of the electrical system, to include the rating of equipment and any on-site distribution transformers and have sufficient capacity to simultaneously charge all required EVs at its full rated amperage.
5. The service panel or subpanel(s) shall have sufficient capacity to accommodate the required number of dedicated branch circuit(s) for the future installation of the EVSE.

EV charging space calculation. [N] Table 5.106.5.3.3 shall be used to determine if single or multiple charging space requirements apply for the future installation of EVSE.

Exceptions: On a case-by-case basis where the local enforcing agency has determined EV charging and infrastructure is not feasible based upon one or more of the following conditions:

1. Where there is insufficient electrical supply.
2. Where there is evidence suitable to the local enforcing agency substantiating that additional local utility infrastructure design requirements, directly related to the implementation of Section 5.106.5.3, may adversely impact the construction cost of the project.

TABLE 5.106.5.3.3

TOTAL NUMBER OF ACTUAL PARKING SPACES	NUMBER OF REQUIRED EV CHARGING SPACES
0 – 9	0
10 – 25	1
26 – 50	2
51 – 75	4
76 – 100	5
101 – 150	7
151 – 200	10
201 and over	6 percent of total [1]

1. Calculation for spaces shall be rounded up to the nearest whole number.

☐ **5.106.5.3.4 [N] Identification.** The service panel or subpanel(s) circuit directory shall identify the reserved overcurrent protective device space(s) for future EV charging as "EV CAPABLE". The raceway termination location shall be permanently and visibly marked as "EV CAPABLE."

☐ **5.106.5.3.5 [N] Future charging spaces.** Future charging spaces qualify as designated parking as described in Section 5.106.5.2 Designated parking for clean air vehicles.

☑ **5.106.8 Light pollution reduction. [N]** Outdoor lighting systems shall be designed and installed to comply with the following:

1. The minimum requirements in the *California Energy Code* for Lighting Zones 0 to 4 as defined in Chapter 10, Section 10-114 of the *California Administrative Code,* and
2. Backlight, (B) ratings as defined in Illuminating Engineering Society of North America (IESNA) TM-15-11*(shown in TABLE A-1 in Chapter 8),* and
3. Uplight and Glare ratings as defined in *California Energy Code* (shown in TABLES 130.2-A and 130.2-B in Chapter 8) and
4. Allowable Backlight, Uplight, and Glare (BUG) ratings not exceeding those shown in Table 5.106.8 [N], or Comply with a local ordinance lawfully enacted pursuant to Section 101.7, whichever is more stringent.

Exceptions: [N]

1. Luminaires that qualify as exceptions in Section 140.7 of the *California Energy Code.*
2. Emergency lighting.
3. Building facade meeting the requirements in Table 140.7-B of the *California Energy Code*, Part 6.
4. Custom lighting features as allowed by the local enforcing agency, as permitted by Section 101.8 Alternate materials, designs and methods of construction.

Notes:

1. **[N]** See also *California Building Code,* Chapter 12, Section 1205.7 for college campus lighting requirements for parking facilities and walkways.
2. Refer to Chapter 8 (Compliance Forms, Worksheets and Reference Material) for Illuminating Engineering Society Technical Memorandum TM-15-11 Table A-1, *California Energy Code* Tables 130.2-A and 130.2-B.
3. Refer to the California Energy Code for requirements for additions and alterations.

TABLE 5.106.8 [N]

MAXIMUM ALLOWABLE BACKLIGHT, UPLIGHT, AND GLARE (BUG) RATINGS
(See CALGreen for TABLE)

☑ **5.106.10 Grading and paving.** Construction plans shall indicate how site grading or a drainage system will manage all surface water flows to keep water from entering buildings. Examples of methods to manage surface water include, but are not limited to, the following:

1. Swales.
2. Water collection and disposal systems.
3. French drains.
4. Water retention gardens.
5. Other water measures which keep surface water away from buildings and aid in groundwater recharge.

Exception: Additions and alterations not altering the drainage path.

☑ **5.106.12 Shade trees. [DSA-SS]** Shade trees shall be planted to comply with Sections 5.106.12.1, 5.106.12.2, and 5.106.12.3. Percentages shown shall be measured at noon on the summer solstice. Landscape irrigation necessary to establish and maintain tree health shall comply with Section 5.304.6.

☐ **5.106.12.1 Surface parking areas.** Shade tree plantings, minimum #10 container size or equal, shall be installed to provide shade over 50% of the parking area within 15 years.

Exception: The surface parking area covered by solar photovoltaic shade structures, or shade structures with roofing materials that comply with Table A5.106.11.2.2 in Appendix A5, are not included in the total area calculation.

☐ **5.106.12.2 Landscape areas.** Shade trees plantings, minimum #10 container size or equal, shall be installed to provide shade over 20% of the landscape area within 15 years

Exception: Playfields for organized sport activity are not included in the total area calculation.

☐ **5.106.12.3 Hardscape areas.** Shade trees plantings, minimum #10 container size or equal, shall be installed to provide shade over 20% of the hardscape area within 15 years.

Exception: Walks, hardscape areas covered by solar photovoltaic shade structures, and hardscape areas covered by shade structures with roofing materials that comply with Table A5.106.11.2.2 in Appendix A5, are not included in the total area calculation.

DIVISION 5.2 – ENERGY EFFICIENCY

SECTION 5.201 – GENERAL

☑ **5.201.1 California Energy Code.** For the purposes of mandatory energy efficiency standards in this code, the California Energy Commission will continue to adopt mandatory standards.

DIVISION 5.3 – WATER EFFICIENCY AND CONSERVATION

SECTION 5.303 – INDOOR WATER USE

5.303.3 Water conserving plumbing fixtures and fittings. Plumbing fixtures (water closets and urinals) and fittings (faucets and showerheads) shall comply with the following:

☑ **5.303.3.1 Water closets.** The effective flush volume of all water closets shall not exceed 1.28 gallons per flush. Tank-type water closets shall be certified to the performance criteria of the U.S. EPA WaterSense Specifications for Tank-Type Toilets.

Note: The effective flush volume of dual flush toilets is defined as the composite, average flush volume of two reduced flushes and one full flush.

5.303.3.2 Urinals.

☑ **5.303.3.2.1 Wall mounted urinals**. The effective flush volume of wall mounted urinals shall not exceed 0.125 gallons per flush.

☑ **5.303.3.2.2 Floor mounted urinals**. The effective flush volume of floor mounted or other urinals shall not exceed 0.5 gallons per flush.

5.303.3.3 Showerheads

☐ **5.303.3.3.1 Single showerhead.** Showerheads shall have a maximum flow rate of not more than 1.8 gallons per minute at 80 psi. Showerheads shall be certified to the performance criteria of the U.S. EPA WaterSense Specifications for showerheads.

☐ **5.303.3.3.2 Multiple showerheads serving one shower**. When a shower is served by more than one showerhead, the combined flow rate of all showerheads and/or other shower outlets controlled by a single valve shall not exceed 1.8 gallons per minute at 80 psi, or the showerhead shall be designed to allow only one shower outlet to be in operation at one time.

Note: A hand-held shower shall be considered a showerhead.

5.303.3.4 Faucets and fountains.

☑ **5.303.3.4.1 Non-residential lavatory faucets.** Non-residential lavatory faucets shall have a maximum flow rate of not more than 0.5 gallons per minute at 60 psi.

☑ **5.303.3.4.2 Kitchen faucets.** Kitchen faucets shall have a maximum flow rate of not more than 1.8 gallons per minute at 60 psi. Kitchen faucets may temporarily increase the flow above the maximum rate, but not to exceed 2.2 gallons per minute at 60 psi, and must default to a maximum flow rate of 1.8 gallons per minute at 60 psi.

5.303.3.4.3 Wash fountains. Wash fountains shall have a maximum flow rate of not more than 1.8 gallons per minute/20 [rim space (inches) at 60 psi].

☑ **5.303.3.4.4 Metering faucets.** Metering faucets shall not deliver more than 0.20 gallons per cycle.

☑ **5.303.3.4.5 Metering faucets for wash fountains.** Metering faucets for wash fountains shall have a maximum flow rate of not more than 0.20 gallons per cycle/20 [rim space (inches) at 60 psi].

Note: Where complying faucets are unavailable, aerators or other means may be used to achieve reduction.

☑ **5.303.6 Standards for plumbing fixtures and fittings.** Plumbing fixtures and fittings shall be installed in accordance with the *California Plumbing Code*, and shall meet the applicable standards referenced in Table 1701.1 of the *California Plumbing Code* and in Chapter 6 of this code.

SECTION 5.304 – OUTDOOR WATER USE

5.304.6 Outdoor potable water use in landscape areas. For public schools and community colleges, landscape projects as described in Sections 5.304.6.1 and 5.304.6.2 shall comply with the California Department of Water Resources Model Water Efficient Landscape Ordinance (MWELO) commencing with Section 490 of Chapter 2.7, Division 2, Title 23, *California Code of Regulations*, except that the Evapotranspiration Adjustment Factor (ETAF) shall be 0.65 with an additional water allowance for special landscape areas (SLA) of 0.35.

Exception: Any project with an aggregate landscape area of 2,500 square feet or less may comply with the prescriptive measures contained in Appendix D of the MWELO.

☑ **5.304.6.1 Newly constructed landscapes.** New construction projects with an aggregate landscape area equal to or greater than 500 square feet.

☑ **5.304.6.2 Rehabilitated landscapes.** Rehabilitated landscape projects with an aggregate landscape area equal to or greater than 1,200 square feet.

DIVISION 5.4 – MATERIAL CONSERVATION AND RESOURCE EFFICIENCY

SECTION 5.407 – WATER RESISTANCE AND MOISTURE MANAGEMENT

☑ **5.407.1 Weather protection.** Provide a weather-resistant exterior wall and foundation envelope as required by *California Building Code,* Section 1402.2 (Weather Protection), manufacturer's installation instructions, or local ordinance, whichever is more stringent.

5.407.2 Moisture control. Employ moisture control measures by the following methods:

☑ **5.407.2.1 Sprinklers.** Design and maintain landscape irrigation systems to prevent spray on structures.

5.407.2.2 Entries and openings. Design exterior entries and/or openings subject to foot traffic or wind-driven rain to prevent water intrusion into buildings as follows:

☑ **5.407.2.2.1 Exterior door protection.** Primary exterior entries shall be covered to prevent water intrusion by using nonabsorbent floor and wall finishes within at least 2 feet around and perpendicular to such openings plus at least one of the following:

1. An installed awning at least 4 feet in depth.
2. The door is protected by a roof overhang at least 4 feet in depth.
3. The door is recessed at least 4 feet.
4. Other methods which provide equivalent protection.

☑ **5.407.2.2.2 Flashing.** Installed flashings integrated with a drainage plane.

SECTION 5.408 – CONSTRUCTION WASTE REDUCTION, DISPOSAL AND RECYCLING

5.408.1 Construction waste management. Recycle and/or salvage for reuse a minimum of 65 percent of the nonhazardous construction and demolition waste in accordance with Section 5.408.1.1, 5.408.1.2 or 5.408.1.3; or meet a local construction and demolition waste management ordinance, whichever is more stringent.

☑ **5.408.1.1 Construction waste management plan.** Where a local jurisdiction does not have a construction and demolition waste management ordinance that is more stringent, submit a construction waste management plan that:

1. Identifies the construction and demolition waste materials to be diverted from disposal by efficient usage, recycling, reuse on the project or salvage for future use or sale.

2. Determines if construction and demolition waste materials will be sorted on-site (source-separated) or bulk mixed (single stream).
3. Identifies diversion facilities where construction and demolition waste material collected will be taken.
4. Specifies that the amount of construction and demolition waste materials diverted shall be calculated by weight or volume, but not by both.

☑ **5.408.1.2 Waste management company.** Utilize a waste management company that can provide verifiable documentation that the percentage of construction and demolition waste material diverted from the landfill complies with this section.

Note: The owner or contractor shall make the determination if the construction and demolition waste material will be diverted by a waste management company.

Exceptions to Sections 5.408.1.1 and 5.408.1.2:

1. Excavated soil and land-clearing debris.
2. Alternate waste reduction methods developed by working with local agencies if diversion or recycle facilities capable of compliance with this item do not exist.
3. Demolition waste meeting local ordinance or calculated in consideration of local recycling facilities and markets.

☑ **5.408.1.3 Waste stream reduction alternative.** The combined weight of new construction disposal that does not exceed two pounds per square foot of building area may be deemed to meet the 65 percent minimum requirement as approved by the enforcing agency.

☑ **5.408.1.4 Documentation.** Documentation shall be provided to the enforcing agency which demonstrates compliance with Section 5.408.1.1 through 5.408.1.3. The waste management plan shall be updated as necessary and shall be accessible during construction for examination by the enforcing agency.

Notes:

1. Sample forms found in "A Guide to the California Green Building Standards Code (Nonresidential)" located at www.bsc.ca.gov/Home/CALGreen.aspx may be used to assist in documenting compliance with the waste management plan.
2. Mixed construction and demolition debris (C&D) processors can be located at the California Department of Resources Recycling and Recovery (CalRecycle).

SECTION 5.410 – BUILDING MAINTENANCE AND OPERATION

☑ **5.410.1 Recycling by occupants.** Provide readily accessible areas that serve the entire building and are identified for the depositing, storage and collection of non-hazardous materials for recycling, including (at a minimum) paper, corrugated cardboard, glass, plastics, organic waste, and metals or meet a lawfully enacted local recycling ordinance, if more restrictive.

Exception: Rural jurisdictions that meet and apply for the exemption of Public Resources Code 42649.82 (a)(2)(A) et seq. will also be exempt from the organics waste portion of this section.

☑ **5.410.1.2 Sample ordinance.** Space allocation for recycling areas shall comply with Chapter 18, Part 3, Division 30 of the *Public Resources Code.* Chapter 18 is known as the California Solid Waste Reuse and Recycling Access Act of 1991 (Act).

Note: A sample ordinance for use by local agencies may be found in Appendix A of the document at the CalRecycle's website.

DIVISION 5.5 ENVIRONMENTAL QUALITY

SECTION 5.504.1 – POLLUTANT CONTROL

☑ **5.504.3 Covering of duct openings and protection of mechanical equipment during construction.** At the time of rough installation and during storage on the construction site until final startup of the heating, cooling and ventilating equipment, all duct and other related air distribution component openings shall be covered with tape, plastic, sheet metal or other methods acceptable to the enforcing agency to reduce the amount of dust, water and debris which may enter the system.

5.504.4 Finish material pollutant control. Finish materials shall comply with Sections 5.504.4.1 through 5.504.4.6.

☑ **5.504.4.1 Adhesives, sealants, and caulks.** Adhesives, sealants, and caulks used on the project shall meet the requirements of the following standards:

1. Adhesives, adhesive bonding primers, adhesive primers, sealants, sealant primers, and caulks shall comply with local or regional air pollution control or air quality management district rules where applicable, or SCAQMD Rule 1168 VOC limits, as shown in Tables 5.504.4.1 and 5.504.4.2. Such products also shall comply with the Rule 1168 prohibition on the use of certain toxic compounds (chloroform, ethylene dichloride, methylene chloride, perchloroethylene, and trichloroethylene), except for aerosol products as specified in subsection 2, below.
2. Aerosol adhesives, and smaller unit sizes of adhesives, and sealant or caulking compounds (in units of product, less packaging, which do not weigh more than one pound and do not consist of more than 16 fluid ounces) shall comply with statewide VOC standards and other requirements, including prohibitions on use of certain toxic compounds, of *California Code of Regulations*, Title 17, commencing with Section 94507.

TABLE 5.504.4.1 – ADHESIVE VOC LIMIT
(See CALGreen for TABLE)

TABLE 5.504.4.2 – SEALANT VOC LIMIT
(See CALGreen for TABLE)

☑ **5.504.4.3 Paints and coatings.** Architectural paints and coatings shall comply with VOC limits in Table 1 of the ARB Architectural Coatings Suggested Control Measure, as shown in Table 5.504.4.3, unless more stringent local limits apply. The VOC content limit for coatings that do not meet the definitions for the specialty coatings categories listed in Table 5.504.4.3, shall be determined by classifying the coating as a Flat, Nonflat, or Nonflat-High Gloss coating, based on its gloss, as defined in Subsections 4.21, 4.36 and 4.37 of the 2007 California Air Resources Board, Suggested Control Measure, and the corresponding Flat, Nonflat or Nonflat-High Gloss VOC limit in Table 5.504.4.3 shall apply.

TABLE 5.504.4.3 – VOC CONTENT LIMITS FOR ARCHITECTURAL COATINGS
(See CALGreen for TABLE)

☑ **5.504.4.3.1 Aerosol paints and coatings.** Aerosol paints and coatings shall meet the PWMIR Limits for ROC in Section 94522(a)(3) and other requirements, including prohibitions on use of certain toxic compounds and ozone depleting substances, in Sections 94522(c)(2) and (d)(2) of *California Code of Regulations*, Title 17, commencing with Section 94520; and in areas under the jurisdiction of the Bay Area Air Quality Management District additionally comply with the percent VOC by weight of product limits of Regulation 8 Rule 49.

5.504.4.3.2 Verification. Verification of compliance with this section shall be provided at the request of the enforcing agency. Documentation may include, but is not limited to, the following:

1. Manufacturer's product specification.

2. Field verification of on-site product containers.

☑ **5.504.4.4 Carpet systems.** All carpet installed in the building interior shall meet at least one of the following testing and product requirements:

1. Carpet and Rug Institute's Green Label Plus Program;
2. Compliant with the VOC-emission limits and testing requirements specified in the California Department of Public Health Standard Method for the Testing and Evaluation of Volatile Organic Chemical Emissions from Indoor Sources Using Environmental Chambers, Version1.1, February 2010 (also known as CDPH Standard Method V1.1 or *Specification 01350*);
3. NSF/ANSI 140 at the Gold level or higher;
4. Scientific Certifications Systems Sustainable Choice; or
5. Compliant with the Collaborative for High Performance Schools California (CA-CHPS) Criteria 2014 and listed in the CHPS High Performance Product Database.

☑ **5.504.4.4.1 Carpet cushion.** All carpet cushion installed in the building interior shall meet the requirements of the Carpet and Rug Institute's Green Label program.

☑ **5.504.4.4.2 Carpet adhesive.** All carpet adhesive shall meet the requirements of Table 5.504.4.1.

☑ **5.504.4.5 Composite wood products.** Hardwood plywood, particleboard, and medium density fiberboard composite wood products used on the interior or exterior of the building shall meet the requirements for formaldehyde as specified in ARB's Air Toxics Control Measure (ATCM) for Composite Wood (17 CCR 93120 et seq.). Those materials not exempted by the ATCM must meet the specified emission limits as shown in Table 5.504.4.5.

TABLE 5.504.4.5 – FORMALDEHYDE LIMITS
(See CALGreen for TABLE)

☑ **5.504.4.6 Resilient flooring systems.** For 80 percent of floor area receiving resilient flooring, installed resilient flooring shall meet at least one of the following:

1. Certified under the Resilient Floor Covering Institute (RFCI) FloorScore program;
2. Compliant with the VOC-emission limits and testing requirements specified in the California Department of Public Health's 2010 Standard Method for the Testing and Evaluation Chambers, Version 1.1, February 2010;
3. Compliant with the Collaborative for High Performance Schools California (CA-CHPS) Criteria 2014 and listed in the CHPS High Performance Product Database; or
4. Products certified under the UL GREENGUARD Gold (formerly the Greenguard Children & Schools program).

☑ **5.504.5.3 Filters.** In mechanically ventilated buildings, provide regularly occupied areas of the building with air filtration media for outside and return air prior to occupancy that provides at least a Minimum Efficiency Reporting Value (MERV) of 13. MERV 13 filters shall be installed prior to occupancy and recommendations for maintenance with filters of the same value shall be included in the operation and maintenance manual.

Exception: Existing mechanical equipment.

5.504.5.3.1 Labeling. Installed filters shall be clearly labeled by the manufacturer indicating the MERV rating.

SECTION 5.505 – INDOOR MOISTURE CONTROL

☑ **5.505.1 Indoor moisture control.** Buildings shall meet or exceed the provisions of *California Building Code*, CCR, Title 24, Part 2, Sections 1202 (Ventilation) and Chapter 14 (Exterior Walls). For additional measures see Section 5.407.2 of this code.

SECTION 5.506 – INDOOR AIR QUALITY

☑ **5.506.1 Outside air delivery.** For mechanically or naturally ventilated spaces in buildings, meet the minimum requirements of Section 120.1 (Requirements for Ventilation) of the *California Energy Code*, or the applicable local code, whichever is more stringent, and Division 1, Chapter 4 of CCR, Title 8.

SECTION 5.507 – ENVIRONMENTAL COMFORT

☐ **5.507.4 Acoustical control.** Employ building assemblies and components with Sound Transmission Class (STC) values determined in accordance with ASTM E 90 and ASTM E 413 or Outdoor–Indoor Sound Transmission Class (OITC) determined in accordance with ASTM E 1332, using either the prescriptive or performance method in Section 5.507.4.1 or 5.507.4.2.

Exception: Buildings with few or no occupants or where occupants are not likely to be affected by exterior noise, as determined by the enforcement authority, such as factories, stadiums, storage, enclosed parking structures and utility buildings.

Exception: [DSA-SS] For public schools and community colleges, the requirement of this section and all subsections apply only to new construction.

☐ **5.507.4.1 Exteriors noise transmission, prescriptive method.** Wall and roof-ceiling assemblies exposed to the noise source making up the building or addition envelope or altered envelope shall meet a composite STC rating of at least 50 or a composite OITC rating of no less than 40, with exterior windows of a minimum STC of 40 or OITC of 30 in the following locations:

1. Within the 65 CNEL noise contour of an airport.

   Exceptions:

   1. L_{dn} or CNEL for military airports shall be determined by the facility Air Installation Compatible Land Use Zone (AICUZ) plan.
   2. L_{dn} or CNEL for other airports and heliports for which a land use plan has not been developed shall be determined by the local general plan noise element.

2. Within the 65 CNEL or L_{dn} noise contour of a freeway or expressway, railroad, industrial source or fixed-guideway source as determined by the Noise Element of the General Plan.

☐ **5.507.4.1.1 Noise exposure where noise contours are not readily available.** Buildings exposed to a noise level of 65 dBL_{eq}-1-hr during any hour of operation shall have building, addition or alteration exterior wall and roof-ceiling assemblies exposed to the noise source meeting a composite STC rating of at least 45 (or OITC 35), with exterior windows of a minimum STC of 40 (or OITC 30).

☐ **5.507.4.2 Performance method.** For buildings located as defined in Section 5.507.4.1 or 5.507.4.1.1, wall and roof-ceiling assemblies exposed to the noise source making up the building or addition envelope or altered envelope shall be constructed to provide an interior noise environment attributable to exterior sources that does not exceed an hourly equivalent noise level (L_{eq}-1Hr) of 50 dBA in occupied areas during any hour of operation.

☐ **5.507.4.2.1 Site features.** Exterior features such as sound wall or earth berms may be utilized as appropriate to the building, addition or alteration project to mitigate sound migration to the interior.

☐ **5.507.4.2.2. Documentation of compliance.** An acoustical analysis documenting complying interior sound levels shall be prepared by personnel approved by the architect or engineer of record.

☐ **5.507.4.3 Interior sound transmission.** Wall and floor-ceiling assemblies separating tenant spaces and tenant spaces and public places shall have an STC of at least 40.

Note: Examples of assemblies and their various STC rating may be found at the California Office of Noise Control: www. https://www.tsib.org/files/STC_IIC_Ratings.pdf

SECTION 5.508 – OUTDOOR AIR QUALITY

5.508.1 Ozone depletion and greenhouse gas reductions. Installations of HVAC, refrigeration and fire suppression equipment shall comply with Sections 5.508.1.1 and 5.508.1.2.

☑ **5.508.1.1 Chlorofluorocarbons (CFCs).** Install HVAC, refrigeration and fire suppression equipment that do not contain CFCs.

A DSA Project Submittal Guideline is a compilation of recommendations based on code, referenced standards, DSA bulletin/policy/procedure/interpretation documents, and DSA practices. These guidelines are intended to give the design profession helpful information and insight into DSA's project application, submittal, and review processes. Guidelines are provided by DSA in support of DSA's goals of providing stakeholders information they need to facilitate working smoothly with DSA, and to help standardize practices among the four DSA Regional Offices.

Compliance with a Guideline does not assure that a project is complete or that it adheres to the requirements of the California Building Standards Code (Title 24 of the California Code of Regulations) or all DSA requirements. Additional information may be required, depending on project complexity or site conditions. For complete submittal requirements see forms *DSA 1: Application for Approval of Plans and Specifications* and *DSA 3: Project Submittal Checklist.*

AGENCY APPROVAL STAMP:

IDENTIFICATION STAMP
DIV. OF THE STATE ARCHITECT
APP: 01-120890 INC:
REVIEWED FOR
SS ☑ FLS ☑ ACS ☑
DATE: 10/25/2023

TLCDARCHITECTURE
520 Third St. #250
Santa Rosa, CA 95401
o: 707.525.5600
f: 707.525.5616
tlcd.com

CONSULTANT:

STAMP:

LICENSED ARCHITECT
CARL SERVAIS
C-32941
REN:12/31/23
STATE OF CALIFORNIA

REVISIONS:

Number	Date	Description

NAPA VALLEY COLLEGE WINE EDUCATION CENTER

2277 NAPA VALLEJO HWY
NAPA, CA 94558

NAPA VALLEY COLLEGE

DSA APPLICATION NUMBER:
01-120890

TLCD PROJECT NUMBER:
21062.00

DATE:
04/12/2023

© THESE DRAWINGS ARE INSTRUMENTS OF SERVICE AND ARE THE SOLE PROPERTY OF TLCD ARCHITECTURE. ANY USE WITHOUT WRITTEN CONSENT IS PROHIBITED.

CALGREEN MANDATORY MEASURES

G-009

10/2/2023 2:54:04 PM

ABBREVIATIONS

AB	AGGREGATE BASE
ABAN	ABANDONED
ABS	ACRYLONITRILE–BUTADIENE–STYRENE
AC	ASPHALT CONCRETE
ACP	ASBESTOS CEMENT PIPE
AD	ALGEBRAIC DIFFERENCE
ADA	AMERICANS WITH DISABILITIES ACT
ADPT	ADAPTER
AGG	AGGREGATE
ALUM	ALUMINUM
ANG	ANGLE
AP	ANGLE POINT
APN	ASSESSORS PARCEL NUMBER
APPROX	APPROXIMATE
ARV	AIR RELEASE VALVE
AVE	AVENUE
AVG	AVERAGE
BC	BEGIN HORIZONTAL CURVE
BFP	BACKFLOW PREVENTER
BLDG	BUILDING
BLVD	BOULEVARD
BM	BENCHMARK
BO	BLOWOFF
BOC	BACK OF CURB
BV	BUTTERFLY VALVE
BVC	BEGIN VERTICAL CURVE
BSW	BACK OF SIDEWALK
BT	BOTTOM OF TAPER
B&R	BRELJE & RACE
C	CONDUIT
CAV	COMBINATION AIR AND VACUUM RELEASE VALVE
CB	CATCH BASIN
CBC	CALIFORNIA BUILDING CODE
CDF	CONTROLLED DENSITY FILL
CHK	CHECK
CIP	CAST IRON PIPE
CIPP	CAST–IN–PLACE PIPE
℄	CENTERLINE
CL	CENTERLINE
CL	CLASS
CLR	CLEAR
CMP	CORRUGATED METAL PIPE
CMPA	CORRUGATED METAL PIPE ARCH
CMU	CONCRETE MASONRY UNIT
CO	CLEANOUT
COAX	COAXIAL CABLE
CONC	CONCRETE
COND	CONDUIT
CONST	CONSTRUCTION
CONT	CONTINUOUS
COTG	CLEANOUT TO GRADE
CP	CONTROL POINT
CPLG	COUPLING
CR	CURB RETURN
CSP	CORRUGATED STEEL PIPE
CT	COURT
CTB	CEMENT TREATED BASE
CTR	CENTER
CY	CUBIC YARD
C/C	CENTER TO CENTER
C&G	CURB AND GUTTER
DBL	DOUBLE
DCDC	DOUBLE CHECK DETECTOR CHECK
DCV	DETECTOR CHECK VALVE
DDC	DOUBLE DETECTOR CHECK
DET	DETECTOR
DH	DETECTOR HANDHOLE
DI	DROP INLET
DIA	DIAMETER
DIP	DUCTILE IRON PIPE
DLC	DETECTOR LOOP CONDUIT
DR	DRIVE
DS	DOWNSPOUT
DS	DOWNSTREAM
DWG	DRAWING
DWR	DASHED WHITE PAVEMENT MARKER
DWY	DRIVEWAY
DY	DOUBLE YELLOW
DYR	DASHED YELLOW RAISED PAVEMENT MARKER
E	EAST
EA	EACH
EC	END HORIZONTAL CURVE
ECC	ECCENTRIC
EFFL	EFFLUENT (SEWER)
EG	EXISTING GROUND
EL	ELEVATION
ELEC	ELECTRICAL
ELL	ELBOW
EP	EDGE OF PAVEMENT
EQ	EQUAL
ESMT	EASEMENT
EVC	END VERTICAL CURVE
EW	EACH WAY
EX	EXISTING
FA	FIRE ALARM
FC	FACE OF CURB
FCA	FLANGED COUPLING ADAPTER
FDC	FIRE DEPARTMENT CONNECTION
FES	FLARED END SECTION
FF	FINISHED FLOOR
FG	FINISHED GRADE
FH	FIRE HYDRANT
FL (symbol)	FLOWLINE
FL	FLOWLINE
FLG	FLANGE
FLSO	FLOWLINE OF SIDE OPENING
FLEX	FLEXIBLE
FM	FORCE MAIN (PRESSURE)
FRP	FIBERGLASS REINFORCED PLASTIC
FT	FEET
FTG	FOOTING
GALV	GALVANIZED
GB	GRADE BREAK
GPM	GALLONS PER MINUTE
GRD	GROUND
GSP	GALVANIZED STEEL PIPE
GV	GAS VALVE
GV	GATE VALVE
HB	HOSE BIBB
HB	HEADER BOARD
HDG	HOT DIPPED GALVANIZED
HDPE	HIGH DENSITY POLYETHYLENE
HORIZ	HORIZONTAL
HP	HIGH POINT
HPG	HIGH PRESSURE GAS
HPS	HIGH PRESSURE SODIUM
HT	HEIGHT
HWY	HIGHWAY
IC	INTERCONNECT
ICV	IRRIGATION CONTROL VALVE
ID	INSIDE DIAMETER
INV	INVERT
IP	IRON PIPE
IPS	IRON PIPE SIZE
IRR	IRRIGATION
ISA	INTERNATIONAL SYMBOL OF ACCESSIBILITY
JB	JUNCTION BOX
JP	JOINT POLE
JT	JOINT TRENCH
KV	KILOVOLT
L	ARC LENGTH
L	LENGTH
LAT	LATERAL
LF	LINEAL FEET
LG	LIP OF GARAGE
LG	LIP OF GUTTER
LL	LANE LINE
LMA	LUMINAIRE MAST ARM
LN	LANE
LP	LOW POINT
LT	LEFT
LUM	LUMINAIRE
MAX	MAXIMUM
MB	MAILBOX
MBGR	METAL BEAM GUARD RAIL
MFR	MANUFACTURE
MG	MILLION GALLONS

MH	MANHOLE
MIN	MINIMUM
MISC	MISCELLANEOUS
MJ	MECHANICAL JOINT
MON	MONUMENT
MSL	MEAN SEA LEVEL
N	NORTH
NG	NATURAL GROUND
NO.	NUMBER
NA	NOT APPLICABLE
NIC	NOT IN CONTRACT
NPT	NATIONAL PIPE THREAD
OC	ON CENTER
OD	OUTSIDE DIAMETER
OH	OVERHEAD
OZ	OUNCE
PA	PLANTER AREA
PB	PULL BOX
PC	POINT OF CURVATURE
PCC	POINT OF COMPOUND CURVATURE
PCC	PORTLAND CEMENT CONCRETE
PD	PLANTER DRAIN
PE	PLAIN END
PEC	PHOTOELECTRIC CELL
PED	PEDESTRIAN
PG	PAD GRADE
PI	POINT OF INTERSECTION
PIV	POST INDICATOR VALVE
PL (symbol)	PROPERTY LINE
PN	PAVING NOTCH
POC	POINT OF CONNECTION
POC	POINT ON CURVE
POCC	POINT OF COMPOUND CURVE
POVC	POINT ON VERTICAL CURVE
POS	PRIVATE OPEN SPACE
POT	POINT ON TANGENT
PP	POWER POLE
PRC	POINT OF REVERSE CURVATURE
PRV	PRESSURE REDUCING VALVE
PSD	PERFORATED SUBDRAIN
PSI	POUND PER SQUARE INCH
PSV	PRESSURE SUSTAINING VALVE
PT	POINT
PT	POINT OF TANGENCY
PUE	PUBLIC UTILITY EASEMENT
PVC	POLYVINYL CHLORIDE
PVI	POINT OF VERTICAL INTERSECTION
PVMT	PAVEMENT
PWE	PUBLIC WATER EASEMENT
R	RADIUS
RAW	RAW WATER
RC	RELATIVE COMPACTION
RCB	REINFORCED CONCRETE BOX
RCP	REINFORCED CONCRETE PIPE
RD	ROAD
RD	ROOF DRAIN
RED	REDUCER
REF	REFERENCE
ROW	RIGHT OF WAY
RPBP	REDUCED PRESSURE BACKFLOW PREVENTER
RPM	RAISED PAVEMENT MARKER
RSC	REMOTE SUPERVISORY CONTROL
RT	RIGHT
RT	RING TIGHT
RW	RECYCLED WATER
RWL	RAIN WATER LEADER
R/W	RIGHT OF WAY
S	SOUTH
S	SLOPE
S.A.D.	SEE ARCHITECTURAL DRAWINGS
SCADA	SUPERVISORY CONTROL AND DATA ACQUISITION
SCH	SCHEDULE
SD	STORM DRAIN
SDCB	STORM DRAIN CATCH BASIN
SDCO	STORM DRAIN CLEANOUT
SDDI	STORM DRAIN DROP INLET
SDE	STORM DRAIN EASEMENT
SDMH	STORM DRAIN MANHOLE
SE	SEWER EASEMENT
S.E.D.	SEE ELECTRICAL DRAWINGS
SF	SQUARE FEET
SG	SUBGRADE
SIG	SIGNAL
SL	STREET LIGHT
S.L.D.	SEE LANDSCAPE DRAWINGS
SOF	SLIP ON FLANGE
SO	SIDE OPENING (SD)
S.P.D.	SEE PLUMBING DRAWINGS
SPEC	SPECIFICATION
SQ	SQUARE
SS	STAINLESS STEEL
SS	SANITARY SEWER
SSCO	SANITARY SEWER CLEANOUT
S.S.D.	SEE STRUCTURAL DRAWINGS
SSMH	SANITARY SEWER MANHOLE
ST	STREET
STA	STATION
STD	STANDARD
STL	STEEL
SVC	SERVICE
SWE	SIDEWALK EASEMENT
SY	SQUARE YARDS
SW	SIDEWALK
SWL	SOLID WHITE LINE
T	TANGENT
TAN	TANGENT
TB	TOP OF BOX
TBM	TEMPORARY BENCHMARK
TC	TOP OF CONCRETE
TC	TOP OF CURB
TCE	TEMPORARY CONSTRUCTION EASEMENT
TD	TOP OF DIKE
TEL	TELEPHONE
TEMP	TEMPORARY
TF	TOP OF FOUNDATION
TG	TOP OF GRATE
THD	THREADED
TP	TOP OF PIPE
TS	TOP OF SLAB
TS	TRAFFIC SIGNAL
TT	TOP OF TAPER
TW	TOP OF WALL
TWLTL	TWO WAY LEFT TURN LANE
TYP	TYPICAL
UC	UTILITY CHASE
UFFG	UNDER FLOOR FINISHED GRADE
UG	UNDERGROUND
UNO	UNLESS NOTED OTHERWISE
V	VOLT
VC	VERTICAL CURVE
VCP	VITRIFIED CLAY PIPE
VERT	VERTICAL
VG	VALLEY GUTTER
VLT	VAULT
W	WEST
W	WATER
WBD	WALL BACK DRAIN
WM	WATER METER
WNF	WELD NECK FLANGE
WS	WATER SERVICE
WSS	WATER SAMPLING STATION
WT	WEIGHT
WTR	WATER
WV	WATER VALVE
WWF	WELDED WIRE FABRIC
YD	YARD
°	DEGREES
'	MINUTES
"	SECONDS
Δ	DELTA
&	AND
@	AT
#	NUMBER
#	POUNDS
%	PERCENT

LEGEND

LINES

BOUNDARY

PARCEL

CENTER

EASEMENT

UTILITY LINES	EXISTING	PROPOSED
STORM DRAIN	24" SD	24" SD
WATER	8" W — W	8" W
SEWER	12" SS — SS	12" SS
GAS	3" G	
ELECTRICAL	E	12KV — E
TELEPHONE	T	
TELEVISION	TV	
JOINT TRENCH	JT	

TOPOGRAPHY

	EXISTING	PROPOSED
DROP INLET		
DROP INLET WITH SIDE OPENINGS		
WATER METER	WM	
WATER VALVE		
BLOWOFF		
FIRE HYDRANT		
THRUST BLOCK		
GAS METER	GM	
STORM DRAIN MANHOLE		
STORM DRAIN CATCH BASIN		
SEWER MANHOLE		
SEWER CLEANOUT	SS	
JOINT POLE	JP	
LIGHT STANDARD		
GUY/ANCHOR		
CURB & GUTTER		
AC DIKE		
FENCE	X	X
CHAIN LINK FENCE		
DITCH/SWALE		
MONUMENT		
TREE PROTECTION		TP
TREE TO BE SAVED		
TREE TO BE REMOVED		

BENCHMARK

NAME: CP #1
MAG NAIL WITHIN ROY PATRICK DRIVE, NORTH THE SOUTH SIDE OF THE CAMPUS.
HORIZONTAL DATUM: ASSUMED
VERTICAL DATUM: NAVD 1988
ELEVATION: 27.37'
NORTHING: 1860332.320
EASTING: 6482534.870

FEMA INFORMATION

THE APPLICABLE FLOOD INSURANCE RATE MAP FOR THIS SITE IS PANEL NO. 0519, MAP NUMBER 06055C0519G, DATED AUGUST 3, 2016. THE PROJECT SITE IS LOCATED IN ZONE X (NO HATCH, OUTSIDE THE AREA OF MINIMAL FLOOD HAZARD).

GENERAL UNDERGROUND NOTES

1. NO GUARANTEE IS INTENDED THAT UNDERGROUND OBSTRUCTIONS, NOT SHOWN ON THESE PLANS, MAY BE ENCOUNTERED. THOSE SHOWN ARE BASED ON THE BEST INFORMATION AVAILABLE AND THE CONTRACTOR IS CAUTIONED THAT THE OWNER, THE ENGINEERS, ASSUME NO RESPONSIBILITY FOR ANY OBSTRUCTIONS EITHER SHOWN OR NOT SHOWN ON THESE PLANS. THE CONTRACTOR SHALL COOPERATE WITH ALL UTILITY COMPANIES WORKING WITHIN THE LIMITS OF THIS PROJECT.
2. CONTRACTOR SHALL NOT BEGIN EXCAVATION UNTIL ALL EXISTING UTILITIES HAVE BEEN MARKED IN THE FIELD BY THE APPLICABLE ENTITY RESPONSIBLE FOR THAT PARTICULAR UTILITY. THE CONTRACTOR SHALL NOTIFY EACH APPLICABLE ENTITY AT LEAST 48 HOURS BEFORE STARTING WORK.
3. UNDERGROUND SERVICE ALERT: CALL (925) 798–9504 AT LEAST 48 HOURS PRIOR TO EXCAVATION.
4. CONTRACTOR SHALL UNCOVER EXISTING BURIED UTILITIES TO VERIFY LOCATIONS AND ELEVATIONS OF UTILITIES. BURIED UTILITIES INCLUDE, BUT ARE NOT LIMITED TO WATER MAINS AND LATERALS, SEWER LINES, STORM DRAINS, GAS MAINS AND LATERALS, ELECTRICAL DISTRIBUTION LINES AND TELEPHONE LINES. ALL UTILITIES CONFLICTING WITH THE PROPOSED CONSTRUCTION SHALL BE RELOCATED PRIOR TO THE START OF CONSTRUCTION.
5. THE CONTRACTOR SHALL VERIFY EXISTING INVERTS PRIOR TO THE COMMENCEMENT OF ANY CONSTRUCTION. THE CONTRACTOR SHALL NOTIFY THE ENGINEER THROUGH THE RFI PROCESS OF ANY INVERT ELEVATIONS THAT ARE SUBSTANTIALLY DIFFERENT THAN THOSE INDICATED ON THE PLANS. THE PROJECT AND/OR DESIGN ENGINEER MAY ADJUST THE GRADE OF NEW CONSTRUCTION ACCORDINGLY.
6. DISTANCES AND INVERTS ARE TO AND AT THE CENTER OF THE MANHOLES, CLEANOUTS, DROP INLETS, CATCH BASINS, AND YARD DRAINS OR AS MARKED ON THE DRAWINGS.
7. ALL UNDERGROUND IMPROVEMENTS SHALL BE INSTALLED AND APPROVED PRIOR TO PAVING OR FINISH GRADING.
8. ALL WORK ON THE FIRE SYSTEM SHALL COMPLY WITH CITY OF NAPA, CITY OF NAPA FIRE DEPARTMENT, AND NFPA24 REQUIREMENTS.
9. ALL SEWER PIPING AND FITTINGS SHALL BE PVC SDR 26.
10. ALL SANITARY SEWER CLEANOUTS SHALL BE CONSTRUCTED PER THE SEWER CLEANOUT DETAIL ON THE IMPROVEMENT PLANS. RAISED LETTER ON TOP OF THE COVER SHALL READ "SEWER".
11. UTILITIES SHALL NOT BE LOCATED IN THE INFLUENCE ZONE OF ADJACENT STRUCTURAL FOUNDATIONS. TOP OF FOOTING ELEVATIONS SHALL BE DETERMINED IN THE FIELD BY THE CONTRACTOR AS DESCRIBED ON THE ARCHITECTURAL PLANS. THE CONTRACTOR SHALL TAKE INTO ACCOUNT THE LOCATION AND ELEVATION OF UTILITIES LOCATED ADJACENT TO STRUCTURAL FOUNDATIONS AND SET TOP OF FOOTING ELEVATION OF SUFFICIENT DEPTH TO AVOID CREATING A CONDITION WHERE THE ADJACENT UTILITY LINE WILL LIE WITHIN THE INFLUENCE ZONE OF THE STRUCTURAL FOUNDATION.
12. LOCATION, SIZE AND INVERT ELEVATION DATA SHOWN FOR EXISTING UTILITY FACILITIES ARE BASED ON RECORD, TOPOGRAPHIC & FIELD SURVEY DATA PROVIDED BY BRELJE & RACE CONTRACTOR MUST POTHOLE TO LOCATE CONFIRM SIZE, AND WHERE INDICATED, DEPTH OF EXISTING UTILITIES PRIOR TO ANY UTILITY CONSTRUCTION. NOTIFY ENGINEER OF RESULTS, SOME RESULTS MAY IMPACT THE APPROVED DESIGN.
13. A MINIMUM OF 6" CLEARANCE SHALL BE PROVIDED AT ALL PIPE UTILITY CROSSING POINTS. WHERE WATER MAIN CROSS SEWER OR STORM DRAIN PROVIDE A MINIMUM OF 12" CLEARANCE.
14. UTILITY TRENCHES SHOULD BE SEALED WITH CONCRETE, CLAYEY SOIL, SAND–CEMENT SLURRY, OR CONTROLLED DENSITY FILL (CDF) WHERE THE UTILITY ENTERS THE BUILDING UNDER THE PERIMETER FOUNDATION, TO REDUCE THE POTENTIAL OF WATER BENEATH THE BUILDING.
15. EXISTING UNDERGROUND UTILITIES, INCLUDING ELECTRICAL & TELECOMMUNICATION LINES ENCOUNTERED DURING CONSTRUCTION OPERATIONS SHALL REMAIN AND BE PROTECTED UNLESS NOTED OTHERWISE ON THE PLANS. UTILITIES LINES DAMAGED BY CONSTRUCTION OPERATIONS SHALL BE IMMEDIATELY REPORTED TO THE RESIDENT ENGINEER, REPAIRED AND SERVICES RESTORED AT NO ADDITIONAL COST TO THE OWNER.
16. CONTACT CITY OF NAPA PUBLIC WORKS WITHIN 2 WEEK NOTICE BEFORE UNDERTAKING ANY WORK WITHIN THE CITY OF NAPA PUBLIC WATER EASEMENT OR ON CITY OF NAPA PUBLIC WATER LINES. CUT–INS AND TIE–INS TO CITY OF NAPA WATER LINES SHALL BE PERFORMED UNDER THE OBSERVATION OF THE CITY OF NAPA.

ROOF DRAIN NOTES

1. SEE PLUMBING PLANS FOR INDIVIDUAL BUILDINGS FOR CONNECTION DETAILS, EXACT LOCATION, AND ELEVATION OF ROOF DRAINS. THESE DRAINS SHALL BE CONNECTED TO THE ONSITE STORM DRAIN SYSTEM AS SHOWN OR IMPLIED ON CIVIL DRAWINGS WITH A 2% MIN. SLOPE. THE INTENT OF THIS PLAN IS TO CONVEY ROOF DRAINAGE FROM CONNECTION POINTS PROVIDED IN ARCHITECTURAL PLANS. IF THE ROOF DRAIN SYSTEM SHOWN HEREON IS CONSTRUCTED IN ADVANCE OF BUILDING STUBS BEING CONSTRUCTED, THE CONTRACTOR SHALL BE RESPONSIBLE FOR ANY NECESSARY ADJUSTMENTS TO THE COLLECTION SYSTEM TO MATCH THE AS CONSTRUCTED LOCATION OF ROOF DRAINS. THE ROOF DRAIN SYSTEM SHALL BE CONSTRUCTED SO AS TO AVOID COLUMN FOOTINGS AND OTHER OBSTRUCTIONS.
2. WHERE ROOF DRAINS (RD OR SD) ARE SHOWN CONNECTING TO THE MAIN STORM DRAIN, THE CONNECTION SHALL BE MADE USING A MANUFACTURED FITTING WHEREVER POSSIBLE. WHERE IT IS NOT POSSIBLE TO UTILIZE A MANUFACTURED FITTING, THE RD, SD, OR PD SHALL BE BLIND CONNECTED TO THE MAIN STORM DRAIN AT OR ABOVE THE SPRINGTIME OF THE MAIN STORM DRAIN, AND SHALL NOT PROJECT MORE THAN 1/4" INTO THE INTERIOR OF THE MAIN STORM DRAIN. THE CONNECTION SHALL BE SECURED VIA A CONCRETE COLLAR AROUND THE RD, SD, OR PD AT THE POINT OF CONNECTION TO THE MAIN STORM DRAIN.
3. ALL ROOF DRAIN COLLECTION SYSTEM PIPING SHALL BE 4" PIPE, UNLESS OTHERWISE SPECIFIED ON PLANS, WITH A 2% MIN. SLOPE AND 12" MIN. COVER, WHERE POSSIBLE OR DEEPER AS NECESSARY TO CONNECT TO THE DRAINAGE SOURCE.
4. ALL PIPE SHALL BE RIGID PIPE WITH SMOOTH INTERIOR WALL. ALL PIPE CONNECTIONS SHALL BE MADE WITH FITTINGS MANUFACTURED TO BE COMPATIBLE WITH THE PIPE AND SHALL BE SILT TIGHT.
5. WHERE RD OR SD CONNECTION STUBS ARE SHOWN DIRECTLY INTO A SERVING STORM DRAIN, CONTRACTOR SHALL PROVIDE NECESSARY PIPE AND FITTINGS TO MAKE THE NECESSARY VERTICAL TRANSITION TO THE DEPTH OF THE SERVING DRAINAGE SYSTEM.
6. ANY RD OR SD LATERAL CONSTRUCTED IN ADVANCE OF THE DRAIN TO WHICH IT IS DESIGNED TO CONNECT SHALL BE TEMPORARILY PLUGGED AND MARKED WITH A WOOD END STAKE TO PREVENT THE ENTRY OF DEBRIS INTO THE SYSTEM, AND TO FACILITATE LOCATING THE LATERAL AT A LATER TIME.
7. ROUTING OF ROOF DRAIN LINES SHOWN HEREON IS DIAGRAMMATIC. IT SHALL BE THE RESPONSIBILITY OF THE CONTRACTOR TO ROUTE THE ROOF DRAIN LINES SO AS TO AVOID CONFLICTS WITH FOOTING ZONES OF INFLUENCE AND WITH OTHER GRAVITY UTILITY LINES INCLUDING SEWER AND STORM DRAINS, WHICH SHALL BE INSTALLED IN ADVANCE OF ROOF DRAIN SYSTEM PIPING.

GENERAL NOTES

1. ANY DISCREPANCY DISCOVERED BY CONTRACTOR IN THESE PLANS OR ANY FIELD CONDITIONS DISCOVERED BY CONTRACTOR THAT MAY DELAY OR OBSTRUCT THE PROPER COMPLETION OF THE WORK PER THESE PLANS SHALL BE BROUGHT TO THE ATTENTION OF THE ENGINEER AND THE OWNER IMMEDIATELY UPON DISCOVERY. SAID NOTIFICATION SHALL BE IN WRITING.
2. ALL MATERIAL WORKMANSHIP AND CONSTRUCTION SHALL CONFORM TO THE STATE OF CALIFORNIA STANDARD SPECIFICATIONS AND STANDARD PLANS DATED 2010 EXCEPT AS NOTED ON PLANS AND APPLICABLE PUBLIC AGENCY DESIGN AND CONSTRUCTION STANDARDS, LATEST EDITION.
3. CONTRACTOR SHALL OBTAIN ALL AGENCIES' REQUIRED PERMITS AND PAY ALL FEES PRIOR TO COMMENCEMENT OF ANY WORK.
4. GRADE BREAKS ON CURBS AND SIDEWALKS SHALL BE ROUNDED OFF IN FORMS AND SURFACE FINISHING.
5. SIDEWALK WARPS SHALL BE PROVIDED TO ALLOW A CLEAR 4 FOOT WALKWAY IN ALL LOCATIONS INCLUDING WHERE FIRE HYDRANTS, AND OTHER UTILITY STRUCTURES ARE TO BE INSTALLED OR ARE EXISTING.
6. CONSTRUCTION CONTRACTOR AGREES THAT IN ACCORDANCE WITH GENERALLY ACCEPTED CONSTRUCTION PRACTICES, GENERAL CONTRACTOR WILL BE REQUIRED TO ASSUME SOLE AND COMPLETE RESPONSIBILITY FOR JOB SITE CONDITIONS DURING THE COURSE OF CONSTRUCTION OF THE PROJECT, INCLUDING SAFETY OF ALL PERSONS AND PROPERTY; THAT THIS REQUIREMENT SHALL BE MADE TO APPLY CONTINUOUSLY AND NOT BE LIMITED TO NORMAL WORKING HOURS; AND CONSTRUCTION CONTRACTOR FURTHER AGREES TO HOLD HARMLESS, INDEMNIFY AND DEFEND THE OWNER, THE ENGINEER AND HIS CONSULTANTS, AND EACH OF THEIR OFFICERS, EMPLOYEES AND AGENTS.
7. ANY EXCESS MATERIALS SHALL BE CONSIDERED THE PROPERTY OF THE CONTRACTOR AND SHALL BE DISPOSED OF AWAY FROM THE JOB SITE IN ACCORDANCE WITH APPLICABLE LOCAL, STATE AND FEDERAL REGULATIONS.
8. DURING CONSTRUCTION, THE CONTRACTOR SHALL BE RESPONSIBLE FOR CONTROLLING NOISE, ODORS, DUST AND DEBRIS TO MINIMIZE IMPACTS ON SURROUNDING ROADWAYS AND PROPERTIES..
9. CONTRACTOR SHALL BE RESPONSIBLE THAT ALL CONSTRUCTION EQUIPMENT IS EQUIPPED WITH MANUFACTURER APPROVED MUFFLERS/BAFFLES.

GRADING NOTES

1. ALL GRADING OPERATIONS SHALL COMPLY WITH APPENDIX J OF THE CBC AND SHALL PERFORM GRADING IN ACCORDANCE WITH THE RECOMMENDATIONS OF THE GEOTECHNICAL ENGINEERING INVESTIGATION ENTITLED PROPOSED WINE EDUCATION COMPLEX, NAPA VALLEY COLLEGE, DATED AUGUST 5, 2022. PREPARED BY SIGNET TESTING LABS, 3526 BREAKWATER COURT, HAYWARD, CALIFORNIA 95545.
2. AREAS TO BE GRADED SHOULD BE STRIPPED OF THE UPPER FEW INCHES OF SOIL CONTAINING ORGANIC MATTER. ACTUAL STRIPPING DEPTH SHOULD BE DETERMINED BY A SOILS TESTING LAB REPRESENTATIVE IN THE FIELD AT THE TIME OF STRIPPING. THE STRIPPINGS SHOULD BE REMOVED FROM THE SITE. SITE STRIPPINGS AND GRUBBED MATERIALS ARE NOT SUITABLE FOR RE–USE AS ENGINEERED FILL AND SHOULD BE REMOVED FROM THE SITE.
3. THE CONTRACTOR SHALL PERFORM GRADING AND COMPACTION AS REQUIRED TO ESTABLISH FINAL SUBGRADE AS SHOWN ON THESE PLANS. CONTRACTOR IS RESPONSIBLE FOR IMPORTING OR EXPORTING GENERAL AND SELECT FILL AND PROPERLY DISPOSING OF ALL TRENCH SPOILS OFF THE PROJECT SITE.
4. AT ALL TIMES, TEMPORARY CONSTRUCTION EXCAVATIONS SHOULD CONFORM TO THE REGULATIONS OF THE STATE OF CALIFORNIA, DEPARTMENT OF INDUSTRIAL RELATIONS, DIVISION OF INDUSTRIAL SAFETY OR OTHER STRICTER GOVERNING REGULATIONS. THE STABILITY OF TEMPORARY CUT SLOPES SHOULD BE THE RESPONSIBILITY OF THE CONTRACTOR. DEPENDING ON THE TIME OF YEAR WHEN GRADING IS PERFORMED, AND THE SURFACE CONDITIONS EXPOSED, TEMPORARY CUT SLOPES MAY NEED TO BE EXCAVATED TO 1–1/4:1, OR FLATTER. THE TOPS OF THE TEMPORARY CUT SLOPES SHOULD BE ROUNDED BACK TO 2:1 IN WEAK SOIL ZONES.
5. COMPACTED FILL – IF REQUIRED, FILL AND BACKFILL SHOULD BE CONDITIONED TO WITHIN 3 PERCENT OF THE OPTIMUM MOISTURE CONTENT. PROPERLY MOISTURE CONDITIONED AND CURED MATERIALS SHOULD SUBSEQUENTLY BE PLACED IN LOOSE HORIZONTAL LIFTS OF 8 INCHES THICK OR LESS, AND UNIFORMLY COMPACTED TO AT LEAST 95 PERCENT R.C. IN TRAFFIC AREAS AND 90 R.C. IN PEDESTRIAN AREAS RELATIVE COMPACTION, MAXIMUM DRY DENSITY, AND OPTIMUM MOISTURE CONTENT OF FILL MATERIALS SHOULD BE DETERMINED IN ACCORDANCE WITH ASTM TEST METHOD D 1557, "MOISTURE–DESITY RELATIONS OF SOILS AND SOIL–AGGREGATE MIXTURES USING A 10–LB. RAMMER AND 18–IN. DROP.
6. IN GENERAL, CUT AND FILL SLOPES SHOULD BE NO STEEPER THAN 2:1.
7. UNDER BUILDING PAD AREAS: AFTER STRIPPING THE ENTIRE AREA UNDER THE PROPOSED BUILDINGS AND THE AREAS 5' BEYOND THE LIMITS OF THE BUILDINGS, THE SOILS UNDER THE PROPOSED BUILDING PAD SHOULD BE REPLACED WITH NON–EXPANSIVE FILL TO A DEPTH OF AT LEAST 12" BELOW THE LOWEST DESIGN FOOTING BOTTOM ELEVATION AND AT LEAST 5 FEET BEYOND THE OUTER EDGES OF THE FOOTINGS HORIZONTALLY. THE EXPOSED UNDERLYING SOILS SHALL BE SCARIFIED TO A MINIMUM DEPTH OF 18 INCHES BELOW FINISH DESIGN SUBGRADE, MOISTENED TO NEAR OPTIMUM CONTENT AND RECOMPACTED TO AT LEAST 90% RELATIVE COMPACTION. IF LOOSE OR SOFT SOIL IS ENCOUNTER, THESE SHOULD BE REMOVED TO EXPOSE FIRM SOIL AND BACKFILLED WITH SELECT FILL MOISTENED TO NEAR OPTIMUM MOISTURE CONTENT AND RE–COMPACTED TO AT LEAST 90% RELATIVE COMPACTION.
8. UNDER EXTERIOR PEDESTRIAN CONCRETE AREAS: AFTER STRIPPING THE ENTIRE AREA WITHIN THE PROPOSED EXTERIOR CONCRETE AREAS AND THE AREAS 2' BEYOND THE LIMITS OF THE CONCRETE AREAS, THE EXPOSED UNDERLYING SOILS SHALL BE SCARIFIED TO A MINIMUM DEPTH OF 12 INCHES BELOW FINISH DESIGN SUBGRADE, MOISTENED TO NEAR OPTIMUM CONTENT AND RECOMPACTED TO AT LEAST 90% RELATIVE COMPACTION. IF LOOSE OR SOFT SOIL IS ENCOUNTER, THESE SHOULD BE REMOVED TO EXPOSE FIRM SOIL AND BACKFILLED WITH SELECT FILL MOISTENED TO NEAR OPTIMUM MOISTURE CONTENT AND RE–COMPACTED TO AT LEAST 90% RELATIVE COMPACTION.
9. UNDER PAVED CONCRETE AREAS, ASPHALT VEHICULAR AREAS AND YARD EAST OF THE BUILDING AREAS: FOLLOWING DEMOLITION OF THE ENTIRE AREA WITHIN THE PROPOSED PAVED VEHICULAR AREAS AND THE AREAS 2' BEYOND THE LIMITS VEHICULAR AREAS, THE EXPOSED UNDERLYING SOILS SHALL BE SCARIFIED TO A MINIMUM DEPTH OF 12 INCHES, MOISTENED TO NEAR OPTIMUM CONTENT AND RECOMPACTED TO AT LEAST 95% RELATIVE COMPACTION. IF LOOSE OR SOFT SOIL IS ENCOUNTER, THESE SHOULD BE REMOVED TO EXPOSE FIRM SOIL AND BACKFILLED WITH SELECT FILL MOISTENED TO NEAR OPTIMUM MOISTURE CONTENT AND RE–COMPACTED TO AT LEAST 95% RELATIVE COMPACTION. PROOF ROLL EXPOSED SUBGRADE TO A FIRM AND UNYIELDING SURFACE UNDER THE OBSERVATION OF A SOILS TESTING LAB REPRESENTATIVE OR HIS DESIGNATED REPRESENTATIVE PRIOR TO THE PLACEMENT OF AGGREGATE BASE. PLACEMENT OF A SUITABLE GEOTEXTILE FOR STABILIZATION MAY BE REQUIRED. SOFT SPOTS OR AREAS OF PUMPING MAY REQUIRE OVEREXCAVATION AND REPLACEMENT WITH SUITABLE MATERIAL.
10. ALL IMPORT MATERIAL (SELECT FILL) SHALL BE FREE OF CONTAMINATION AND BE GRANULAR WITH 3 INCH MAXIMUM PARTICLE SIZE, A PLASTICITY INDEX LESS THAN 15 AND LESS THAN 30 PERCENT PASSING THE NUMBER 200 SIEVE, ESSENTIALLY NON–PLASTIC. IMPORTED GRAVEL FILL SHOULD BE, AS A MINIMUM, WASHED GRAVEL, FREE FROM VEGETATION AND DEBRIS, WITH A 1 INCH MAXIMUM PARTICLE SIZE AND LESS THAN 5 PERCENT PASSING THE NUMBER 200 SIEVE. IMPORT FILL MATERIAL SHOULD BE APPROVED BY THE PROJECT GEOTECHNICAL ENGINEER PRIOR TO BEING TRANSPORTED TO THE SITE.
11. FILL MAY BE PLACED ON COMPETENT, NEAR–HORIZONTAL SUBGRADE SURFACES THAT HAVE BEEN APPROVED BY SOILS TESTING LAB REPRESENTATIVE, FILL SHOULD BE PLACED IN THIN NEAR–HORIZONTAL LIFTS THAT DO NOT EXCEED 8 INCHES IN UN COMPACTED THICKNESS. FILL SHOULD BE MOISTURE CONDITIONED, AS NECESSARY, TO NEAR OPTIMUM MOISTURE CONTENT AND COMPACTED USING MECHANICAL MEANS TO AT LEAST 90% RELATIVE COMPACTION BUILDING PAD AREAS AND EXTERIOR CONCRETE AREAS, 95% RELATIVE COMPACTION IN VEHICULAR CONCRETE AREAS AND IN ASPHALT PAVEMENT AREAS.
12. THE CONTRACTOR SHALL PERFORM EARTHWORK CALCULATIONS WHICH ACCOUNT FOR HIS PROPOSED METHODS OF GRADING AND TRENCHING OF ALL MATERIALS REGARDLESS OF CHARACTER AS HE DEEMS NECESSARY FOR BIDDING AND CONSTRUCTION PURPOSES. IT SHALL BE THE SOLE RESPONSIBILITY OF THE CONTRACTOR TO ACCOUNT FOR THE COST OF ANY NECESSARY IMPORT OF SELECT MATERIAL OR REMOVAL FROM THE SITE OF UNSUITABLE OR EXCESS FILL MATERIAL IN HIS BID IN ORDER TO ACHIEVE THE GRADES SHOWN ON THE PLAN. NO ADDITIONAL COMPENSATION SHALL BE ALLOWED FOR THIS ITEM OF WORK UNLESS THE OWNER REQUESTS ADDITIONAL WORK BE PERFORMED.
13. TRENCH EXCAVATIONS, SHORING, AND SAFETY IS THE SOLE RESPONSIBILITY OF THE CONTRACTOR. ATTENTION IS DRAWN TO THE STATE OF CALIFORNIA SAFETY ORDERS DEALING WITH "EXCAVATIONS AND TRENCHES".
14. ALL UNSUITABLE AND UNUSABLE EXCESS SOIL MATERIAL SHALL BE REMOVED AND DISPOSED OF OFF THE PROJECT SITE.

STORM DRAIN NOTES

1. STORM DRAIN CONDUITS SHALL BE EITHER PVC, SDR 26, OR H.D.P.E, ADS (N–12), PLASTIC STORM DRAIN CONDUIT WITH SILT TIGHT GASKETED COUPLINGS CONFORMING TO CALTRANS STANDARD SPECIFICATIONS SECTION 64. EXCAVATION AND BACKFILL FOR PLASTIC PIPE SHALL CONFORM TO THE PROVISIONS IN SECTION 19–3 OF THE CALTRANS STANDARD SPECIFICATIONS DATED JULY 1992,IN ADDITION PIPE BACKFILL MATERIAL, FILLED AND COMPACTED TO THE SPRING LINE OF THE PIPE, SHALL CONFORM TO THE SPECIFICATIONS.
2. DRAINAGE STRUCTURE GRATES SHALL BE GALVANIZED STEEL, SIZED FOR THE STRUCTURE AS SHOWN ON THE PLANS. GRATES SHALL BE BOLT DOWN TYPE, WITH MAXIMUM 1/2" WIDTH OPENINGS IN PEDESTRIAN AREAS, ORIENTED PERPENDICULAR TO THE PATH OF TRAVEL. GRATES IN PAVED AREAS SHALL BE HEAVY DUTY H–20 TRAFFIC RATED, GRATES IN LANDSCAPED AREAS SHOULD HAVE STANDARD OPENINGS. DRAINAGE STRUCTURE INSIDE DIMENSIONS ARE SHOWN IN PLAN VIEW (I.E. 1212= A 12"X12" INSIDE DIMENSION OF THE STORM DRAIN STRUCTURE). ACCEPTABLE MANUFACTURES ARE OLDCASTLE PRECAST, US CONCRETE OR CENTRAL PRECAST. DRAINAGE STRUCTURES LABELED AS P4, P6, OR P8 SHALL BE DURA DRAIN P–SERIES AREA DRAINS MANUFACTURED BY OLDCASTLE PRECAST INC.
3. VERTICAL CONTROL OF PIPE LAYING MAY BE BY EITHER (A) "BATTER BOARDS", STRING LINE AND GRADE ROD, OR (B) BY LASER BEAM.
4. ALL STORM DRAIN PIPE LENGTHS SHOWN ARE MEASURED HORIZONTALLY FROM CENTER TO CENTER OF ALL STRUCTURES.
5. CURVES IN THE STORM DRAIN ALIGNMENTS SHALL MEET THE MINIMUM RADIUS FOR THE TYPE OF MATERIAL PLACED. PIPE JOINTS SHALL NOT BE DEFLECTED BEYOND THE MANUFACTURER'S RECOMMENDATIONS.
6. TRENCH DRAINS SHALL BE ACO DRAIN KS100 WITH PRESLOPED TRENCH, BOLT DOWN ADA APPROVED GRATES (LOAD CLASS D TYPE 478q) OR APPROVED EQUAL.

WATER SYSTEM NOTES

1. CONTRACTOR TO COORDINATE WATER MAIN CONSTRUCTION IN A MANNER TO PREVENT ANY CONFLICTS WHERE UTILITY LINES CROSS EACH OTHER.
2. ALL WORK SHALL COMPLY WITH THE STANDARD PROCEDURES, SPECIFICATIONS AND DRAWINGS OF THE CITY OF NAPA PUBLIC WORKS DEPARTMENT.
3. UNLESS OTHERWISE SPECIFIED, ALL FIRE MAINS MUST BE PVC C900, DR14 (CL200).
4. DOMESTIC WATER PIPING AND FITTINGS 3" DIAMETER AND SMALLER SHALL BE SCH 80 PVC. VALVES 3" DIAMETER AND SMALLER SHALL BE SCH 80 PVC BALL VALVES OR BRONZE BODY BALL VALVES. VALVES SHALL BE INSTALLED IN A CHRISTY G5 VALVE BOX.
5. DOMESTIC WATER PIPING 4" DIAMETER AND LARGER SHALL BE PVC C900, DR 14 (CL 305) PIPE. DOMESTIC WATER PIPE FITTINGS 4" DIAMETER AND LARGER SHALL BE DUCTILE IRON, 350 PSI WORKING PRESSURE, MATERIALS AND WALL THICKNESS SHALL BE IN ACCORDANCE WITH AWWA C110 AND ANSI/AWWA C111 FOR 350 WORKING PRESSURE. WATER PIPE FITTINGS 4" DIAMETER AND LARGER SHALL BE RESTRAINED WITH CONCRETE TRUST BLOCKS. IN LIEU OF CONCRETE THRUST BLOCKS RESTRAINED JOINTS CAN BE USED IF THE CONTRACTOR PROVIDES RESTRAINT CALCULATIONS. PIPE JOINTS SHALL BE RESTRAINED WITH EBAA IRON SERIES 2000PV OR EBAA IRON MEGALUG SERIES 1100 PIPE RESTRAINTS AND EBAA IRON SERIES 1500TD BELL RESTRAINT HARNESS. VALVES 4" DIAMETER AND LARGER SHALL BE UL LISTED OR FM APPROVED AWWA TYPE C509 IRON BODY, NON–INDICATING, RESILIENT WEDGE OR RESILIENT SEAT, NO RISING STEM GATE VALVES, SUITABLE FOR 250 PSI MINIMUM WORKING PRESSURE.
6. CUT–INS AND TIE–INS TO CITY OF NAPA WATER LINES SHALL BE PERFORMED UNDER THE OBSERVATION OF THE CITY OF NAPA INSPECTORS. THE CONTRACTOR WILL APPLY, OBTAIN AND PAY FOR AN ENCROACHMENT PERMIT FROM THE CITY OF NAPA TO PERFORM ALL WORK ASSOCIATED WITH PUBLIC WATER LINES WITHIN THE PUBLIC WATER EASEMENTS. CONTACT CITY OF NAPA PUBLIC WORKS WITHIN 48 HOUR NOTICE BEFORE UNDERTAKING ANY WORK WITHIN THE CITY OF NAPA PUBLIC WATER EASEMENT OR ON CITY OF NAPA PUBLIC WATER LINES..

FIRE PROTECTION NOTES

1. NFPA 24 SEC. 10.1 ALL FERROUS METAL PIPE SHALL BE LINED, AND STEEL PIPE SHALL BE COATED AND WRAPPED WITH JOINTS FIELD–COATED AND WRAPPED AFTER ASSEMBLY. FOR BURIED PIPE, GALVANIZING, INTERNALLY OR EXTERNALLY, DOES NOT MEET THE REQUIREMENTS OF THIS SECTION.
2. NFPA 24 SEC. 10.4.1.1 ALL BOLTED JOINT ACCESSORIES SHALL BE CLEANED AND THOROUGHLY COATED WITH CHRISTY'S HD 50 COAL TAR MASTIC (OR APPROVED EQUAL) CORROSION–RETARDING MATERIAL AFTER INSTALLATION.
3. NFPA 24 SEC. 10.6.2.5 AFTER INSTALLATION, RODS, NUTS, BOLTS, WASHERS, CLAMPS, AND OTHER RESTRAINING DEVICES, EXCEPT THRUST BLOCKS, SHALL BE CLEANED AND THOROUGHLY COATED WITH CHRISTY'S HD 50 COAL TAR MASTIC (OR APPROVED EQUAL) CORROSION–RETARDING MATERIAL.
4. NFPA 24 SEC. 10.10.2.1.1 UNDERGROUND PIPING FROM THE WATER SUPPLY TO THE SYSTEM RISER, AND LEAD–IN CONNECTIONS TO THE SYSTEM RISER, SHALL BE COMPLETELY FLUSHED BEFORE THE CONNECTION IS MADE TO DOWNSTREAM FIRE PROTECTION SYSTEM PIPING TO REMOVE FOREIGN MATERIALS THAT MIGHT HAVE ENTERED THE MAIN DURING THE COURSE OF THE INSTALLATION AND RUN UNTIL WATER RUNS CLEAR. WITNESSED BY THE INSPECTOR OF THE RECORD. (LOCAL FIRE AUTHORITY SHALL BE NOTIFIED OF DATE AND TIME OF FLUSH AND SHALL ASSIST/WITNESS SUCH TESTING WHEN ABLE.)
5. NFPA 24 SEC. 10.10.2.2.1 ALL PIPING AND ATTACHED APPURTENANCES SUBJECTED TO SYSTEM WORKING PRESSURE SHALL BE HYDROSTATICALLY TESTED AT 200–PSI PRESSURE AND MAINTAINED FOR A MINIMUM OF TWO HOURS. WITNESSED BY THE INSPECTOR OF RECORD. (LOCAL FIRE AUTHORITY SHALL BE NOTIFIED OF DATE AND TIME OF HYDRO–TESTING AND SHALL ASSIST/WITNESS SUCH TESTING WHEN ABLE.)
6. NFPA 24 SEC. 10.6 PRIVATE FIRE SERVICE MAINS SHALL BE RESTRAINED AGAINST MOVEMENT CHANGES IN DIRECTION IN ACCORDANCE WITH 10.6.1 OR 10.6.2. IF RODS ARE USED, THE SIZE AND NUMBER SHALL BE AS SPECIFIED IN TABLE 10.6.2.1.2.2. IF CLAMPS OR RESTRAINT STRAPS ARE USED, THE SIZE SHALL BE AS SPECIFIED IN FIGURE 10.6.2.2.3 AND TABLE 10.6.2.2.3.
7. NFPA 24 SEC. 10.6.1.2/10.6.1.3 THRUST BLOCKS SHALL BE A CONCRETE MIX NOT LEANER THAN ONE PART CEMENT, TWO AND ONE–HALF PARTS SAND, AND FIVE PARTS STONE. THRUST BLOCKS SHALL BE PLACED BETWEEN UNDISTURBED EARTH AND THE FITTING TO BE RESTRAINED, AND SHALL BE CAPABLE OF RESISTING THE CALCULATED THRUST FORCES.
8. NFPA 24 SEC. 10.6.1.4 WHENEVER POSSIBLE, THRUST BLOCKS SHALL BE LOCATED SO THAT THE JOINTS ARE ACCESSIBLE FOR REPAIR.
9. THE AMOUNT OF LEAKAGE IN BURIED PIPING SHALL BE MEASURED AT THE SPECIFIED TEST PRESSURE BY PUMPING FROM A CALIBRATED CONTAINER. FOR NEW PIPE, THE AMOUNT OF LEAKAGE AT THE JOINTS SHALL NOT EXCEED TWO QUARTS PER HOUR PER 100 GASKETS OR JOINTS IRRESPECTIVE OF PIPE DIAMETER. NO VISIBLE LEAKAGE SHALL BE ALLOWED IN ABOVEGROUND PIPING. (ALSO SEE SEC. 10.10.2.2.6 FOR ALLOWABLE LEAKAGE)
10. HYDROSTATIC TESTS SHALL BE MADE BEFORE THE JOINTS ARE COVERED SO THAT ANY LEAKS MAY BE READILY DETECTED. PIPE SECTIONS BETWEEN JOINTS MAY BE COVERED, BUT JOINTS SHALL REMAIN EXPOSED UNTIL HYDROSTATIC TESTING IS COMPLETE.
11. NFPA 24 SEC. 10.10.1 THE INSTALLING CONTRACTOR SHALL BE RESPONSIBLE FOR COMPLETING AND SIGNING THE CONTRACTOR'S MATERIAL AND TEST CERTIFICATE(S) SHOWN IN FIGURE 10.10.1. THIS FORM SHALL BE GIVEN TO THE PROJECT INSPECTOR OF RECORD.
12. NFPA 24 SEC. 10.4.3 THE DEPTH OF COVER OVER WATER PIPES SHALL NOT BE LESS THAN 2 1/2 FT. TO PREVENT MECHANICAL DAMAGE AND SHALL BE BURIED A MINIMUM OF 3 FT. UNDER DRIVEWAYS. IF INFORMATION ON THE PLANS OR IN THE SPECIFICATIONS REQUIRE A DEEPER DEPTH OF COVER, THAT DEEPER REQUIREMENT WILL APPLY.
13. THE METHOD USED FOR UNDERGROUND FIRE–LINES WHEN ENTERING BUILDINGS UNDER CONCRETE FOOTINGS SHALL HAVE THE STRUCTURAL ENGINEER OF RECORD APPROVAL. NFPA 24 SEC. 10.4 REQUIRES A CLEARANCE BY A PIPE SLEEVE WITH A NOMINAL DIAMETER 4 IN. LARGER THAN THE NOMINAL DIAMETER OF THE SUPPLY PIPING FOR 4 IN. NOMINAL AND LARGER. (IE: FIRE–LINES NOMINAL 6 IN. REQUIRES 10 IN. SLEEVE.)
14. PVC PIPING MAY BE INSTALLED TO 5 FEET OUTSIDE THE FOUNDATION OF ANY BUILDING OR STRUCTURE OR PARTS THEREOF. IT SHALL BE BURIED IN THE GROUND FOR ITS ENTIRE LENGTH. IT SHALL NOT BE INSTALLED WITHIN OR UNDER ANY BUILDING OR STRUCTURE. (DUCTILE PIPE SHALL BE INSTALLED WITHIN 5 FEET OF BUILDING.)
15. THE USE OF STEEL PIPE IS NOT PERMITTED ON FIRE MAINS OR SPRINKLER SERVICES.
16. ELECTRICAL CONDUIT SHALL BE ROUTED FROM ALL BACKFLOW DEVICES (DOUBLE DETECTOR CHECK VALVES AND SINGLE CHECK VALVES) TO CENTRAL CONTROL AND MONITORING STATION LOCATED IN ADMINISTRATION BUILDING. REFER TO ELECTRICAL AND FIRE ALARM DRAWINGS FOR CONDUIT SIZE AND WIRING REQUIREMENTS. ALL VALVES SHALL BE SUPERVISED IN ACCORDANCE WITH THE CALIFORNIA FIRE CODE AND NFPA 24.
17. PROVIDE LOCAL FIRE AUTHORITY WITH 48 HOUR NOTICE BEFORE UNDERTAKING ANY WORK ON FIRE SYSTEM.
18. ALL FIRE LINES SHALL BE PVC, AWWA C900, PC 305 (DR–14), UNLESS OTHERWISE NOTED ON THE PLANS.
19. ALL DUCTILE IRON PIPE, FITTINGS, AND VALVES SHALL BE WRAPPED IN POLYETHYLENE ENCASEMENT PER AWWA C105.
20. A FLUSH OF UNDERGROUND FIRE MAIN PIPING SUFFICIENT TO PRODUCE A WATER VELOCITY OF 10 FEET PER SECOND IS REQUIRED BY RFPA 24. PROVIDE A FLUSH OF UNDERGROUND FIRE MAIN PIPING IN THE PRESENCE OF THE FIRE INSPECTOR.
21. ASSUME THE CONCRETE THRUST BLOCK ALLOWING BEARING PRESSURE OF 1,500 PSF.

EROSION PREVENTION AND SEDIMENT CONTROL NOTES

1. EROSION AND SEDIMENT CONTROL DEVICES MUST BE INSTALLED PRIOR TO OCTOBER 1ST AND ARE TO BE MAINTAINED THROUGHOUT CONSTRUCTION UNTIL PERMANENT VEGETATION IS ESTABLISHED AND HAS ACHIEVED AT LEAST 70% COVERAGE. THE LOCATION OF SOME OF THE EROSION CONTROL DEVICES MAY HAVE TO BE ALTERED FROM THAT SHOWN ON THE APPROVED PLANS IF DRAINAGE PATTERNS DURING CONSTRUCTION ARE DIFFERENT FORM THE FINAL PROPOSED DRAINAGE PATTERN. IT IS THE CONTRACTOR'S RESPONSIBILITY TO ACCOMPLISH EROSION CONTROL FOR ALL DRAINAGE PATTERNS CREATED AT VARIOUS STAGES DURING CONSTRUCTION. ANY DIFFICULTY IN CONTROLLING EROSION DURING CONSTRUCTION SHALL BE REPORTED TO THE OWNER/ENGINEER IMMEDIATELY.
2. PERFORM EROSION PREVENTION AND SEDIMENT CONTROL IN ACCORDANCE WITH THE LATEST EDITION OF APPENDIX CHAPTER J OF THE CALIFORNIA BUILDING CODE, APPLICABLE SONOMA COUNTY REGULATIONS, AND SECTION 21 OF THE CALTRANS STANDARD SPECIFICATIONS.
3. THE APPROVED PLANS SHALL CONFORM WITH THE EROSION PREVENTION AND SEDIMENT CONTROL BEST MANAGEMENT PRACTICES CONTAINED IN THE LATEST EDITIONS OF THE FOLLOWING PUBLICATIONS OR AN EQUIVALENT BEST MANAGEMENT PRACTICE:

   EROSION AND SEDIMENT CONTROL FIELD MANUAL BY THE SAN FRANCISCO BAY REGIONAL WATER QUALITY CONTROL BOARD.
   MANUAL OF STANDARDS FOR EROSION & SEDIMENT CONTROL MEASURES BY THE ASSOCIATION OF BAY AREA GOVERNMENTS.
   CONSTRUCTION SITE BEST MANAGEMENT PRACTICES MANUAL BY CALTRANS.
   STORMWATER BEST MANAGEMENT PRACTICE HANDBOOK BY THE CALIFORNIA STORMWATER QUALITY ASSOCIATION.
4. IF DISCREPANCIES OCCUR BETWEEN THESE NOTES, MATERIAL REFERENCED HEREIN OR MANUFACTURER'S RECOMMENDATIONS, THEN THE MOST PROTECTIVE SHALL APPLY.
5. SOME ADDITIONAL EROSION CONTROL DEVICES MAY BE REQUIRED BY THE PROJECT ENGINEER AND/OR INSPECTOR OF RECORD.
6. ALL EROSION AND SEDIMENT CONTROL MEASURES SHALL BE REPAIRED OR REPLACED WHEN THEY ARE NO LONGER FUNCTIONING PER BEST MANAGEMENT PRACTICES.
7. FAILURE TO INSTALL, OPERATE, OR MAINTAIN ALL EROSION CONTROL MEASURES WILL RESULT IN ALL CONSTRUCTION BEING STOPPED ON THE JOB UNTIL SUCH MEASURES ARE CORRECTED.
8. PRESERVATION OF EXISTING VEGETATION SHALL OCCUR TO THE MAXIMUM EXTENT PRACTICABLE.
9. THE OWNER IS RESPONSIBLE FOR PREVENTING STORM WATER POLLUTION GENERATED FROM THE CONSTRUCTION SITE YEAR ROUND. THE OWNER MUST IMPLEMENT AN EFFECTIVE COMBINATION OF EROSION PREVENTION AND SEDIMENT CONTROL ON ALL DISTURBED AREAS DURING THE RAINY SEASON (OCTOBER 1 – APRIL 30).
10. THE CONTRACTOR SHALL HAVE EROSION AND SEDIMENT CONTROL MEASURES ON SITE ADEQUATE TO PROTECT THE ENTIRE SITE PRIOR TO THE OCTOBER 1ST DATE SUCH THAT IT IS IMMEDIATELY AVAILABLE IN PREPARATION OF THE UPCOMING WINTER SEASON OR IN THE EVENT OF AN EARLY RAIN.
11. EROSION PREVENTION AND SEDIMENT CONTROL MEASURES SHALL BE INSPECTED BY THE OWNER BEFORE FORECASTED STORM EVENTS AND AFTER ACTUAL STORM EVENTS TO ENSURE MEASURES ARE FUNCTIONING PROPERLY. STORM EVENTS PRODUCE AT LEAST 1 INCH OF PRECIPITATION IN A 24 HOUR PERIOD. EROSION PREVENTION AND SEDIMENT CONTROL MEASURES THAT HAVE FAILED OR ARE NO LONGER EFFECTIVE SHALL BE PROMPTLY REPLACED. EROSION PREVENTION AND SEDIMENT CONTROL MEASURES SHALL BE MAINTAINED UNTIL DISTURBED AREAS ARE STABILIZED.
12. CHANGES TO THE EROSION PREVENTION AND SEDIMENT CONTROL PLAN MAY BE MADE TO RESPOND TO FIELD CONDITIONS. CHANGES SHALL BE NOTED ON THE PLAN WHEN MADE.
13. DISCHARGES OF POTENTIAL POLLUTANTS FROM CONSTRUCTION SITES SHALL BE PREVENTED USING SOURCE CONTROLS TO THE MAXIMUM EXTENT PRACTICABLE. POTENTIAL POLLUTANTS INCLUDE BUT ARE NOT LIMITED TO: SEDIMENT, TRASH, NUTRIENTS, PATHOGENS, PETROLEUM HYDROCARBONS, METALS, CONCRETE, CEMENT, ASPHALT, LIME, PAINT, STAINS, GLUES, WOOD PRODUCTS, PESTICIDES, HERBICIDES, CHEMICALS, HAZARDOUS WASTE, SANITARY WASTE, VEHICLE OR EQUIPMENT WASH WATER AND CHLORINATED WATER.
14. PRIOR TO COMMENCING LAND DISTURBING ACTIVITY, THE LIMITS OF LAND DISTURBANCE SHALL BE CLEARLY AND ACCURATELY DEMARKED WITH STAKES, RIBBONS, OR OTHER APPROPRIATE MEANS. THE LOCATION AND EXTENT OF ALL AUTHORIZED LAND DISTURBANCE ACTIVITY SHALL BE DEMARCATED FOR THE DURATION OF THE CONSTRUCTION ACTIVITY. NO LAND DISTURBANCE SHALL OCCUR OUTSIDE THE APPROVED LIMITS INDICATED ON THE APPROVED PLANS.
15. PRIOR TO ANY OTHER CONSTRUCTION A STABILIZED CONSTRUCTION ENTRANCE(S) SHALL BE CONSTRUCTED AT EACH POINT OF ENTRY TO OR EXITING FROM THE SITE. THE CONSTRUCTION EXIT SHALL BE MAINTAINED IN A CONDITION WHICH WILL PREVENT TRACKING OR FLOW OF MUD ONTO PUBLIC RIGHT OF WAY, THIS MAY REQUIRE PERIODIC TOP DRESSING WITH STONE, AS CONDITIONS DEMAND, AND REPAIR AND/OR CLEAN OUT OF ANY STRUCTURES USED TO TRAP SEDIMENT, ALL MATERIAL SPILLED, DROPPED, WASHED OR TRACKED FROM VEHICLE OR SITE ONTO PUBLIC ROADWAY OR STORM DRAIN MUST BE REMOVED IMMEDIATELY.
16. IMMEDIATELY AFTER THE ESTABLISHMENT OF CONSTRUCTION ENTRANCES/EXITS, ALL PERIMETER EROSION CONTROL DEVICES AND STORM WATER MANAGEMENT DEVICES SHALL BE INSTALLED PRIOR TO ANY OTHER CONSTRUCTION.
17. THE CONTRACTOR IS TO MAINTAIN AN ON–SITE DAILY LOG OF ALL MAINTENANCE OF EROSION AND SEDIMENTATION CONTROL MEASURES. THE LOG SHALL BE MADE AVAILABLE FOR INSPECTION AT ALL TIMES.
18. SILT FENCES SHALL BE LOCATED ON SITE PER THE APPROVED EROSION CONTROL PLAN TO PREVENT SEDIMENT AND EROSION FROM LEAVING THE PROPERTY LIMITS.
19. EROSION CONTROL MEASURES TO BE PLACED AT DOWNSLOPE TOE OF ALL CUT AND FILL SLOPES.
20. EXPOSED SLOPES SHALL BE PROTECTED BY USING EROSION PREVENTION MEASURES TO THE MAXIMUM EXTENT PRACTICABLE, SUCH AS ESTABLISHING 70% VEGETATION COVERAGE, HYDROSEEDING, STRAW MULCH, GEOTEXTILES, PLASTIC COVERS, BLANKETS OR MATS.
21. WHENEVER IT IS NOT POSSIBLE TO UTILIZE EROSION PREVENTION MEASURES, EXPOSED SLOPES SHALL EMPLOY SEDIMENT CONTROL DEVICES, SUCH AS FIBER ROLLS AND SILT FENCES. FIBER ROLLS AND SILT FENCES SHALL BE TRENCHED AND KEYED INTO THE SOIL AND INSTALLED ON CONTOUR. SILT FENCES SHALL BE INSTALLED APPROXIMATELY 2 TO 5 FEET FROM TOE OF SLOPE.
22. AS A MINIMUM, ALL GRADED AREAS AND EXPOSED SOIL WITHIN THIS PROJECT SHALL BE SEEDED FOR EROSION CONTROL BY THE CONTRACTOR. SEED AND MULCH WILL BE APPLIED BY OCTOBER 1ST TO ALL EXPOSED SOIL WITHIN OR ADJACENT TO THE PROJECT. HYDROSEEDING SHALL BE CONDUCTED IN A THREE STEP PROCESS. FIRST, EVENLY APPLY SEED MIX AND FERTILIZER TO THE EXPOSED SOIL. SECOND, EVENLY APPLY MULCH OVER THE SEED AND FERTILIZER. THIRD, STABILIZE THE MULCH IN PLACE.

   APPLICATIONS SHALL BE BROADCASTED MECHANICALLY OR MANUALLY AT THE RATES SPECIFIED BELOW. SEED MIX AND FERTILIZER SHALL BE WORKED INTO THE SOIL BY ROLLING OR TAMPING. IF STRAW IS USED AS MULCH, STRAW SHALL BE DERIVED FROM WHEAT, RICE OR BARLEY AND BE APPROXIMATELY 6 TO 8 INCHES IN LENGTH. STABILIZATION OF MULCH SHALL BE DONE HYDRAULICALLY BY APPLYING AN EMULSION OR MECHANICALLY BY CRIMPING OR PUNCHING THE MULCH INTO THE SOIL. EQUIVALENT METHODS AND MATERIALS MAY BE USED ONLY IF THEY ADEQUATELY PROMOTE VEGETATION GROWTH AND PROTECT EXPOSED SLOPES.

MATERIALS	APPLICATION RATE (POUNDS PER ACRE)
SEED MIX	
BROMUS MOLLIS (BLANDO BROME)	40
TRIFOLIUM HIRTUM (HYKON ROSE CLOVER)	20
FERTILIZER	
16–20–0 & 15% SULPHUR	500
MULCH	
STRAW	4000
HYDRAULIC STABILIZING*	
M–BINDER OR SENTINEL	75–100
EQUIVALENT MATERIAL	PER MANUFACTURER

   *NON–ASPHALTIC, DERIVED FROM PLANTS

23. THE OWNER SHALL PROTECT STORM DRAIN INLETS FROM POTENTIAL POLLUTANTS UNTIL DRAINAGE CONVEYANCE SYSTEMS ARE FUNCTIONAL AND CONSTRUCTION HAS BEEN COMPLETED. THE CONTRACTOR IS RESPONSIBLE FOR CLEANING OUT ALL STORM DRAIN STRUCTURES AND PIPE PRIOR TO FINAL COMPLETION.
24. ENERGY DISSIPATERS SHALL BE INSTALLED AT STORM DRAIN OUTLETS WHICH MAY CONVEY STORM WATER FLOW LEADING TO SOIL EROSION.
25. SOIL AND MATERIAL STOCKPILES SHALL BE PROPERLY PROTECTED TO MINIMIZE SEDIMENT AND POLLUTANT TRANSPORT FROM THE CONSTRUCTION SITE.
26. CONTRACTOR IS RESPONSIBLE FOR MONITORING DOWNSTREAM CONDITIONS THROUGHOUT THE CONSTRUCTION PERIOD AND FOR CLEARING ANY DEBRIS AND SEDIMENT CAUSED BY THE CONSTRUCTION.
27. DURING THE RAINY SEASON (OCTOBER 1ST THROUGH APRIL 30TH) ALL SEDIMENT BARRIERS ARE TO BE INSPECTED AND REPAIRED AT THE END OF EACH WORKING DAY AND IN ADDITION AFTER EACH STORM. THE CONTRACTOR SHALL INSPECT EROSION AND SEDIMENT CONTROL MEASURES AND INLETS AFTER EACH SIGNIFICANT RAINFALL AND DAILY DURING PROLONGED STORM EVENTS. REMOVE SEDIMENTS WHEN ACCUMULATIONS REACH ONE THIRD THE HEIGHT OF THE BARRIER AND REPLACE FILTER DEVICES AS NECESSARY TO ENSURE PROPER FUNCTION.
28. SOLID WASTE, SUCH AS TRASH, DISCARDED BUILDING MATERIALS AND DEBRIS, SHALL BE PLACED IN DESIGNATED COLLECTION AREAS OR CONTAINERS. THE CONSTRUCTION SITE SHALL BE CLEARED OF SOLID WASTE DAILY, OR AS NECESSARY, AND REGULAR REMOVAL AND PROPER DISPOSAL SHALL BE ARRANGED.
29. A CONCRETE WASHOUT AREA, SUCH AS A TEMPORARY PIT, SHALL BE DESIGNATED TO CLEAN CONCRETE TRUCKS AND TOOLS. AT NO TIME SHALL CONCRETE PRODUCTS AND WASTE BE ALLOWED TO ENTER WATERWAYS SUCH AS CREEKS OR STORM DRAINS.
30. PROPER APPLICATION, CLEANING AND STORAGE OF POTENTIALLY HAZARDOUS MATERIALS, SUCH AS PAINTS AND CHEMICALS, SHALL BE CONDUCTED TO PREVENT THE DISCHARGE OF POLLUTANTS.
31. WHEN UTILIZED, TEMPORARY RESTROOMS AND SANITARY FACILITIES SHALL BE LOCATED AND MAINTAINED TO PREVENT THE DISCHARGE OF POLLUTANTS.
32. APPROPRIATE VEHICLE STORAGE, FUELING, MAINTENANCE AND CLEANING AREAS SHALL BE DESIGNATED AND MAINTAINED TO PREVENT DISCHARGE OF POLLUTANTS.
33. THESE EROSION PREVENTION AND SEDIMENT CONTROL NOTES ASSIGN RESPONSIBILITY TO THE OWNER FOR VARIOUS ACTIVITIES ASSOCIATED WITH NPDES PERMITTING, IMPLEMENTATION & MONITORING. ALTHOUGH THE OWNER IS ESTABLISHED AS THE RESPONSIBLE PARTY BY THE VARIOUS AGENCIES CHARGED WITH ADMINISTERING NPDES REGULATIONS, THE CONTRACTOR SHALL ESTABLISH A CONTRACT PRICE FOR PERFORMING ALL NPDES PERMITTING, IMPLEMENTATION & MONITORING ACTIVITIES AND SHALL BE HELD RESPONSIBLE BY THE OWNER FOR THE PERFORMANCE OF SUCH ACTIVITIES FOR THE DURATION OF THE CONSTRUCTION CONTRACT.

AGENCY APPROVAL STAMP:

IDENTIFICATION STAMP
DIV. OF THE STATE ARCHITECT
APP: 01-120890 INC:
REVIEWED FOR
SS ☑ FLS ☑ ACS ☑
DATE: 10/25/2023

TLCDARCHITECTURE
520 Third St. #250
Santa Rosa, CA 95401
o: 707.525.5600
f: 707.525.5616
tlcd.com

CONSULTANT:

Brelje & Race
CONSULTING ENGINEERS
475 Aviation Boulevard, Suite 120
Santa Rosa, CA 95403
v: 707-576-1322
f: 707-576-0469
www.brce.com

STAMP:

REGISTERED PROFESSIONAL ENGINEER
PAUL V. BARTHOLOMEW
No. 40512
Exp. 3-31-25
CIVIL
STATE OF CALIFORNIA
8/30/23

REVISIONS:

Number	Date	Description

NAPA VALLEY COLLEGE WINE EDUCATION CENTER

2277 NAPA VALLEJO HWY
NAPA, CA 94558

NAPA VALLEY COLLEGE

DSA APPLICATION NUMBER
01-120890

TLCD PROJECT NUMBER:
21062/2701.17

DATE:
8/30/2023

DRAWN BY:
PIT

CHECKED BY:
RG

ABBREVIATIONS, LEGEND & NOTES

C-001

© THESE DRAWINGS ARE INSTRUMENTS OF SERVICE AND ARE THE SOLE PROPERTY OF TLCD ARCHITECTURE; ANY USE WITHOUT WRITTEN CONSENT IS PROHIBITED.

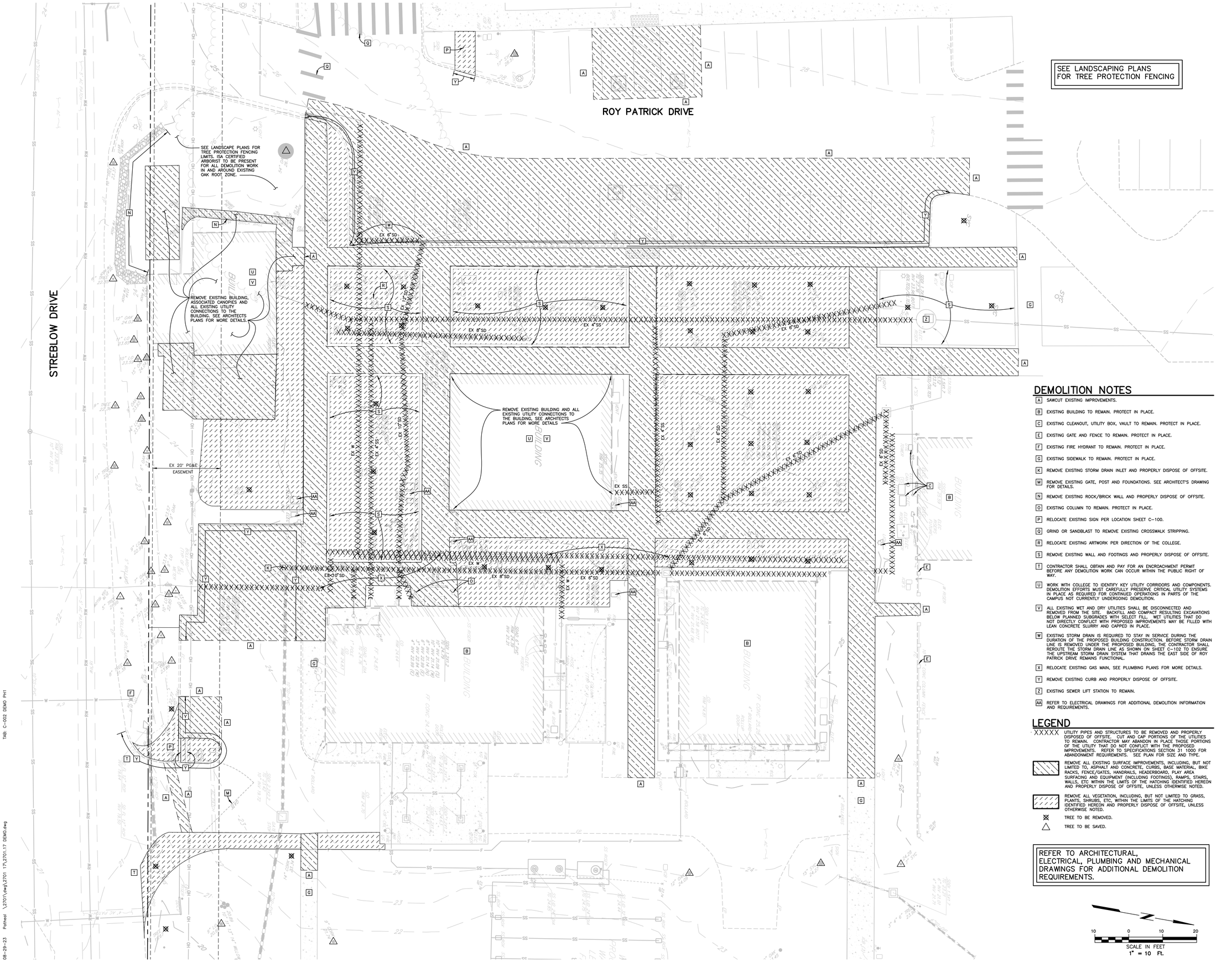

DEMOLITION NOTES

- A SAWCUT EXISTING IMPROVEMENTS.
- B EXISTING BUILDING TO REMAIN. PROTECT IN PLACE.
- C EXISTING CLEANOUT, UTILITY BOX, VAULT TO REMAIN. PROTECT IN PLACE.
- E EXISTING GATE AND FENCE TO REMAIN. PROTECT IN PLACE.
- F EXISTING FIRE HYDRANT TO REMAIN. PROTECT IN PLACE.
- G EXISTING SIDEWALK TO REMAIN. PROTECT IN PLACE.
- K REMOVE EXISTING STORM DRAIN INLET AND PROPERLY DISPOSE OF OFFSITE.
- M REMOVE EXISTING GATE, POST AND FOUNDATIONS. SEE ARCHITECT'S DRAWING FOR DETAILS.
- N REMOVE EXISTING ROCK/BRICK WALL AND PROPERLY DISPOSE OF OFFSITE.
- O EXISTING COLUMN TO REMAIN. PROTECT IN PLACE.
- P RELOCATE EXISTING SIGN PER LOCATION SHEET C-100.
- Q GRIND OR SANDBLAST TO REMOVE EXISTING CROSSWALK STRIPPING.
- R RELOCATE EXISTING ARTWORK PER DIRECTION OF THE COLLEGE.
- S REMOVE EXISTING WALL AND FOOTINGS AND PROPERLY DISPOSE OF OFFSITE.
- T CONTRACTOR SHALL OBTAIN AND PAY FOR AN ENCROACHMENT PERMIT BEFORE ANY DEMOLITION WORK CAN OCCUR WITHIN THE PUBLIC RIGHT OF WAY.
- U WORK WITH COLLEGE TO IDENTIFY KEY UTILITY CORRIDORS AND COMPONENTS. DEMOLITION EFFORTS MUST CAREFULLY PRESERVE CRITICAL UTILITY SYSTEMS IN PLACE AS REQUIRED FOR CONTINUED OPERATIONS IN PARTS OF THE CAMPUS NOT CURRENTLY UNDERGOING DEMOLITION.
- V ALL EXISTING WET AND DRY UTILITIES SHALL BE DISCONNECTED AND REMOVED FROM THE SITE. BACKFILL AND COMPACT RESULTING EXCAVATIONS BELOW PLANNED SUBGRADES WITH SELECT FILL. WET UTILITIES THAT DO NOT DIRECTLY CONFLICT WITH PROPOSED IMPROVEMENTS MAY BE FILLED WITH LEAN CONCRETE SLURRY AND CAPPED IN PLACE.
- W EXISTING STORM DRAIN IS REQUIRED TO STAY IN SERVICE DURING THE DURATION OF THE PROPOSED BUILDING CONSTRUCTION. BEFORE STORM DRAIN LINE IS REMOVED UNDER THE PROPOSED BUILDING, THE CONTRACTOR SHALL REROUTE THE STORM DRAIN LINE AS SHOWN ON SHEET C-102 TO ENSURE THE UPSTREAM STORM DRAIN SYSTEM THAT DRAINS THE EAST SIDE OF ROY PATRICK DRIVE REMAINS FUNCTIONAL.
- X RELOCATE EXISTING GAS MAIN, SEE PLUMBING PLANS FOR MORE DETAILS.
- Y REMOVE EXISTING CURB AND PROPERLY DISPOSE OF OFFSITE.
- Z EXISTING SEWER LIFT STATION TO REMAIN.
- AA REFER TO ELECTRICAL DRAWINGS FOR ADDITIONAL DEMOLITION INFORMATION AND REQUIREMENTS.

LEGEND

- XXXXX UTILITY PIPES AND STRUCTURES TO BE REMOVED AND PROPERLY DISPOSED OF OFFSITE. CUT AND CAP PORTIONS OF THE UTILITIES TO REMAIN. CONTRACTOR MAY ABANDON IN PLACE THOSE PORTIONS OF THE UTILITY THAT DO NOT CONFLICT WITH THE PROPOSED IMPROVEMENTS. REFER TO SPECIFICATIONS SECTION 31 1000 FOR ABANDONMENT REQUIREMENTS. SEE PLAN FOR SIZE AND TYPE.
- REMOVE ALL EXISTING SURFACE IMPROVEMENTS, INCLUDING, BUT NOT LIMITED TO, ASPHALT AND CONCRETE, CURBS, BASE MATERIAL, BIKE RACKS, FENCE/GATES, HANDRAILS, HEADERBOARD, PLAY AREA SURFACING AND EQUIPMENT (INCLUDING FOOTINGS), RAMPS, STAIRS, WALLS, ETC WITHIN THE LIMITS OF THE HATCHING IDENTIFIED HEREON AND PROPERLY DISPOSE OF OFFSITE, UNLESS OTHERWISE NOTED.
- REMOVE ALL VEGETATION, INCLUDING, BUT NOT LIMITED TO GRASS, PLANTS, SHRUBS, ETC, WITHIN THE LIMITS OF THE HATCHING IDENTIFIED HEREON AND PROPERLY DISPOSE OF OFFSITE, UNLESS OTHERWISE NOTED.
- TREE TO BE REMOVED.
- TREE TO BE SAVED.

REFER TO ARCHITECTURAL, ELECTRICAL, PLUMBING AND MECHANICAL DRAWINGS FOR ADDITIONAL DEMOLITION REQUIREMENTS.

10 0 10 20
SCALE IN FEET
1" = 10 FT.

AGENCY APPROVAL STAMP:

IDENTIFICATION STAMP
DIV. OF THE STATE ARCHITECT
APP: 01-120890 INC:
REVIEWED FOR
SS ☑ FLS ☑ ACS ☑
DATE: 10/25/2023

TLCDARCHITECTURE
520 Third St. #250
Santa Rosa, CA 95401
o: 707.525.5600
f: 707.525.5616
tlcd.com

CONSULTANT:

Brelje & Race
CONSULTING ENGINEERS
475 Aviation Boulevard, Suite 120
Santa Rosa, CA 95403
v: 707-576-1322
f: 707-576-0469
www.brce.com

STAMP:

REGISTERED PROFESSIONAL ENGINEER
R. C. BARTOLI
No. 40512
Exp. 3-31-25
CIVIL
STATE OF CALIFORNIA
10/27/23

REVISIONS:

Number	Date	Description

NAPA VALLEY COLLEGE WINE EDUCATION CENTER

2277 NAPA VALLEJO HWY
NAPA, CA 94558

NAPA VALLEY COLLEGE

DSA APPLICATION NUMBER
01-120890

TLCD PROJECT NUMBER
21062/2701.17

DATE:
8/30/2023

DRAWN BY:
PIT

CHECKED BY:
RG

PHASE 1 DEMOLITION PLAN

C-002

THESE DRAWINGS AND SPECIFICATIONS ARE THE SOLE PROPERTY OF TLCD ARCHITECTURE AND ARE NOT TO BE USED OR REPRODUCED IN ANY MANNER WITHOUT WRITTEN CONSENT.

08-29-23 Pathed: \2701\dwg\2701 17\2701.17 DEMO.dwg TAB: C-002 DEMO PH1

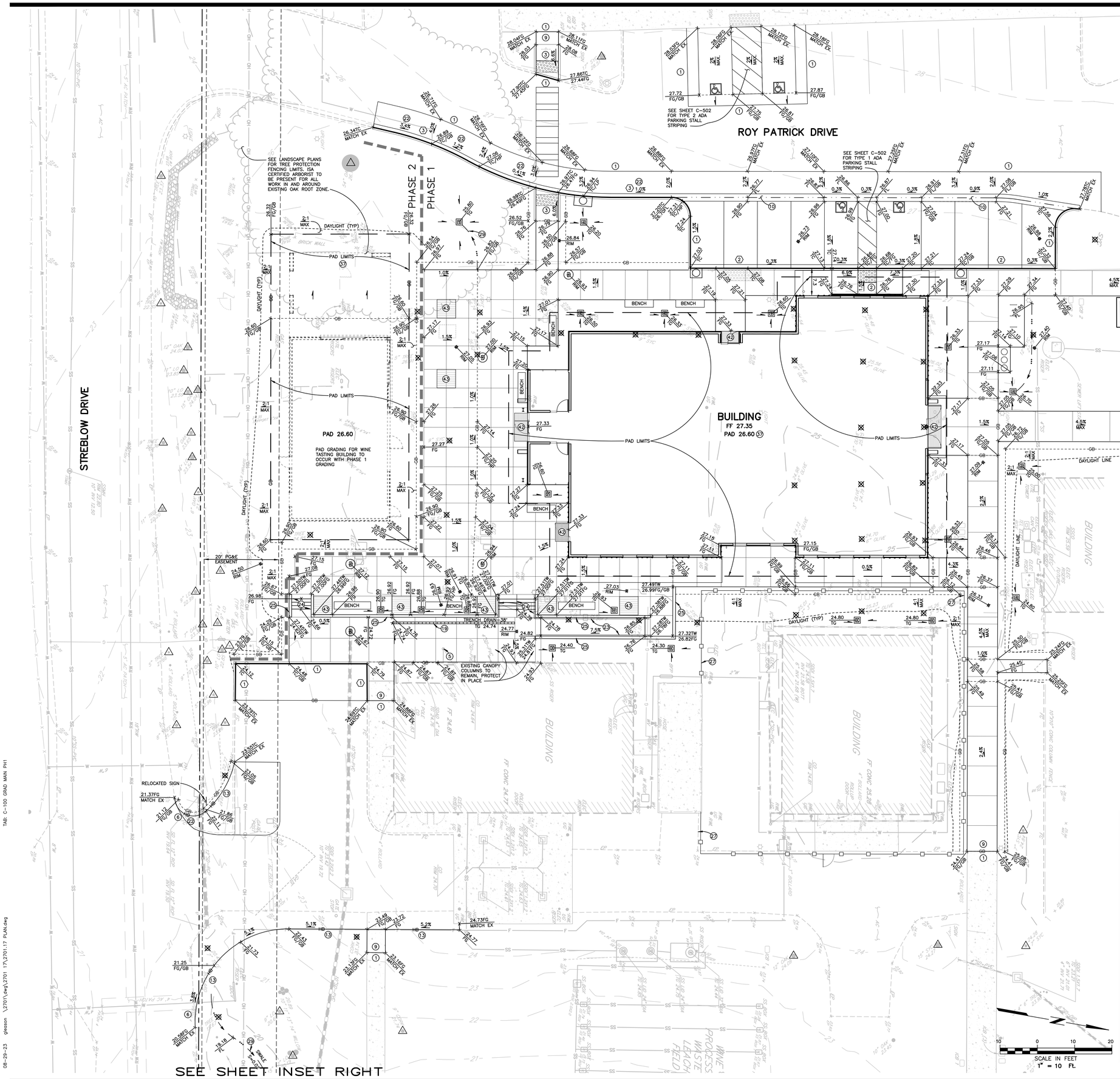

LEGEND

1 2 3 CURB TYPES PER DETAILS SHEET C-501

TREE TO BE REMOVED.

TREE TO BE SAVED.

GRADING NOTES

(ONLY NOTES RELEVANT TO THIS SHEET ARE SHOWN)

1. SAWCUT AND MATCH EXISTING IMPROVEMENTS.
2. INSTALL PEDESTRIAN RAMP TYPE A, PER DETAIL SHEET C-502.
3. INSTALL PEDESTRIAN RAMP TYPE B, PER DETAIL SHEET C-502.
4. INSTALL CURB TRANSITION PER DETAIL SHEET C-501.
5. RAISE EXISTING UTILITY BOX TO FINISHED GRADE.
6. CONTRACTOR SHALL OBTAIN AND PAY FOR AN ENCROACHMENT PERMIT FROM THE CITY OF NAPA BEFORE ANY WORK CAN OCCUR WITHIN THE PUBLIC RIGHT OF WAY.
9. DOWEL NEW SIDEWALK TO EXISTING SIDEWALK, PER DETAIL SHEET C-501.
10. INSTALL CONCRETE VALLEY GUTTER, PER DETAIL SHEET C-501.
13. INSTALL REDWOOD HEADER BOARD, PER DETAIL SHEET C-501.
19. 4" WIDE TRENCH DRAIN SHALL BE ACO DRAIN K100S WITH PRE-SLOPED TRENCH (OR APPROVED EQUAL), WITH SLOTTED ADA IRON BOLT DOWN GRATES. OUTLET PIPE FROM TRENCH DRAIN SHALL BE 4" DIAMETER SDR 35 PVC PIPE AT MINIMUM SLOPE OF 1%. TRENCH DRAINS SHALL INCLUDE INLINE CATCH BASINS (ACO K900 SERIES) WITH TRASH BUCKET. SEE DETAIL SHEET C-503.
22. BEFORE THE INSTALLATION OF ANY CURB AND GUTTER THE CONTRACTOR SHALL VERIFY THAT THE PROPOSED LIP OF GUTTER ELEVATIONS ARE LOWER THAN THE ADJACENT ASPHALT PAVEMENT ELEVATIONS TO ALLOW POSITIVE DRAINAGE AND A MINIMUM 2% ASPHALT SLOPE FROM THE ASPHALT SAWCUT LOCATION TO THE PROPOSED LIP OF GUTTER. NOTIFY ENGINEER OF RESULTS FOR POSSIBLE ADJUSTMENTS TO THE PROPOSED TOP OF CURB AND LIP OF GUTTER ELEVATIONS.
23. RAMP HANDRAILS, SEE LANDSCAPE ARCHITECTS DRAWINGS SHEET L-202 FOR HANDRAIL DETAILS.
24. STAIR HANDRAILS, SEE LANDSCAPE ARCHITECTS DRAWINGS SHEET L-203 FOR HANDRAIL DETAILS.
25. RETAINING WALL, SEE LANDSCAPE ARCHITECT PLANS SHEET L-202 FOR DETAILS.
27. NEW FENCING, SEE ARCHITECTS PLANS FOR DETAILS.
28. CONCRETE SEAT WALL, SEE LANDSCAPE ARCHITECTS DRAWINGS FOR DETAILS.
29. INSTALL TYPICAL SWALE, PER DETAIL SHEET C-501.
37. OVER EXCAVATE AND RECOMPACT UNDER BUILDING PAD PER GEOTECHNICAL ENGINEERS RECOMMENDATIONS.
42. RECESSED ENTRY GRILLES, SEE ARCHITECT'S PLAN FOR DETAILS.
43. TREE GRATE, SEE LANDSCAPE PLANS FOR DETAILS

SEE BELOW LEFT

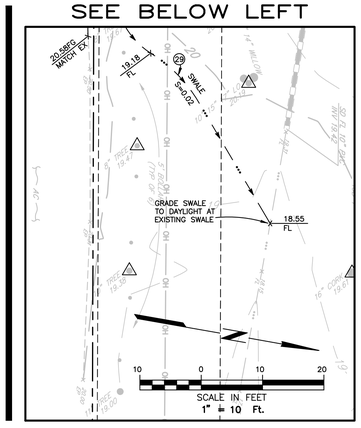

AGENCY APPROVAL STAMP:

IDENTIFICATION STAMP
DIV. OF THE STATE ARCHITECT
APP: 01-120890 INC:
REVIEWED FOR
SS ☑ FLS ☑ ACS ☑
DATE: 10/25/2023

TLCDARCHITECTURE
520 Third St. #250
Santa Rosa, CA 95401
o: 707.525.5600
f: 707.525.5616
tlcd.com

CONSULTANT:

Brelje & Race
CONSULTING ENGINEERS
475 Aviation Boulevard, Suite 120
Santa Rosa, CA 95403
v: 707-576-1322
f: 707-576-0469
www.brce.com

STAMP:

REGISTERED PROFESSIONAL ENGINEER
PAUL C. BARTHEL
No. 40512
Exp. 3-31-25
CIVIL
STATE OF CALIFORNIA
10/10/23

REVISIONS:

Number	Date	Description

NAPA VALLEY COLLEGE WINE EDUCATION CENTER

2277 NAPA VALLEJO HWY
NAPA, CA 94558

NAPA VALLEY COLLEGE

DSA APPLICATION NUMBER
01-120890

TLCD PROJECT NUMBER
21062/2701.17

DATE:
8/30/2023

DRAWN BY:
PIT

CHECKED BY:
RG

PHASE 1 GRADING PLAN EDUCATION COMPLEX

C-100

© THESE DRAWINGS ARE INSTRUMENTS OF SERVICE AND ARE THE SOLE PROPERTY OF TLCD ARCHITECTURE. ANY USE WITHOUT WRITTEN CONSENT IS PROHIBITED.

TAB: C-100 GRAD MAIN PH1

08-29-23 gleason \2701\dwg\2701 17\2701-17 PLAN.dwg

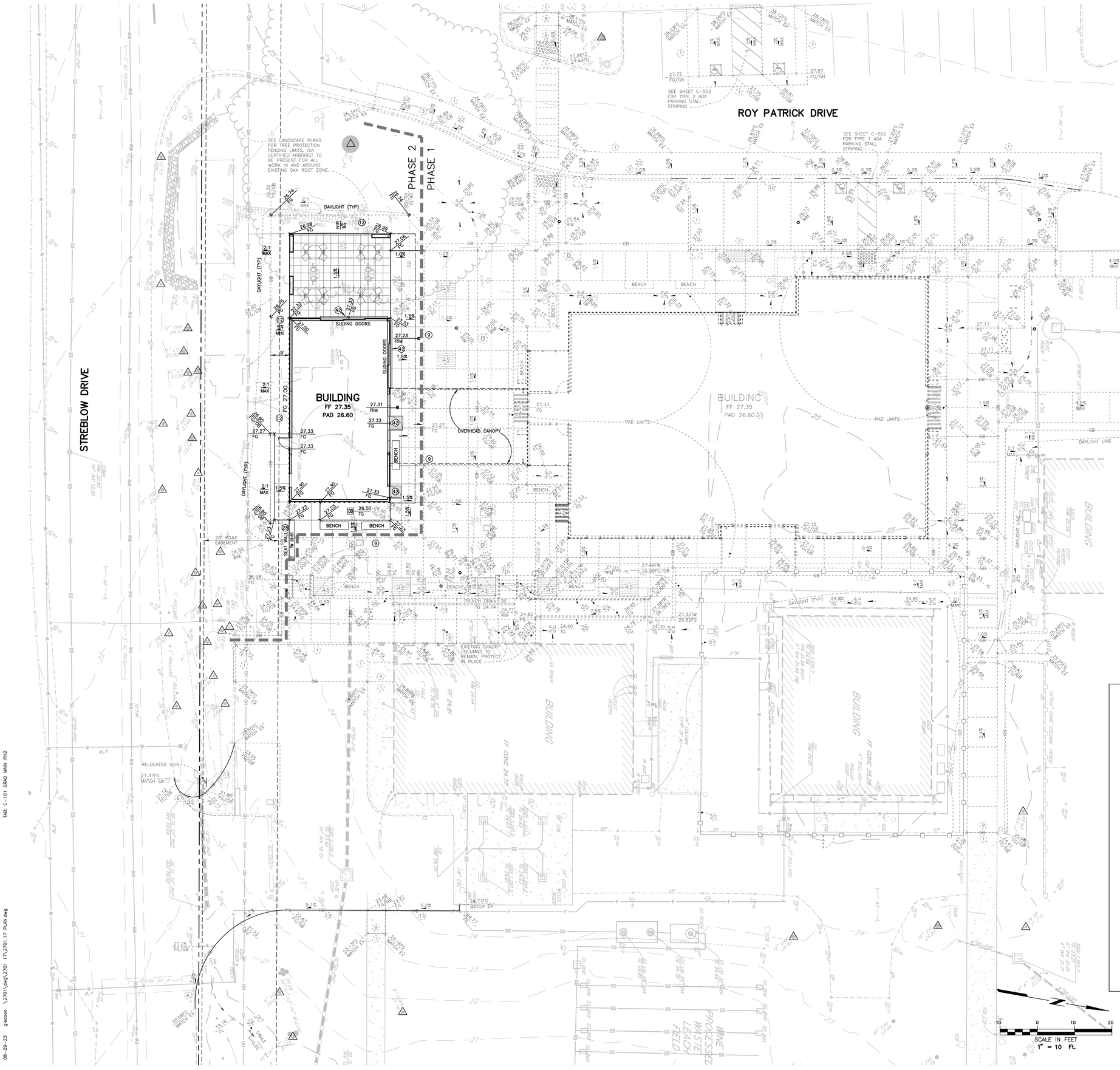

GRADING NOTES

(ONLY NOTES RELEVANT TO THIS SHEET ARE SHOWN)

9 DOWEL NEW SIDEWALK TO EXISTING SIDEWALK, PER DETAIL SHEET C-501.

12 GRADE LANDSCAPE AREA 5% MINIMUM SLOPE AWAY FROM BUILDING TO DRAINAGE SWALE.

28 CONCRETE SEAT WALL, SEE LANDSCAPE ARCHITECTS DRAWINGS FOR DETAILS.

42 RECESSED ENTRY GRILLES, SEE ARCHITECT'S PLAN FOR DETAILS.

NEW ASPHALT PAVEMENT WILL ACCOMMODATE FIRE APPARATUS PER CFC 503.2. SEE CALCULATIONS BELOW

PROJECT: Napa Valley College
JOB No.: 2701.17
DATE: 06/29/2023

PAVEMENT STRUCTURAL SECTION FOR FIRE APARATTUS CALCULATION

$TI = 4$
$R\text{-}VALUE_{AB} = 78$
$R\text{-}VALUE_{SG} = 5$
$SF\ (Safety\ Factor) = 60mm$

$GF_{AB} = 1.1$
$GF_{AC} = \frac{5.67}{TI^{0.5}}$ If TI<5, use TI=5
$GF_{AC} = \frac{5.67}{5^{0.5}}$
$GF_{AC} = 2.54$

DETERMINATION OF ASPHALT CONCRETE THICKNESS

$AC\ thickness = \frac{GE_{AC}}{GF_{AC}}$

$GE_{AC} = 0.975(TI).(100 - R_{AB}) + SF$
$GE_{AC} = 0.975(4).(100 - 5) + 60$
$GE_{AC} = 145.8\ mm$

$AC\ thickness = \frac{GE_{AC}}{GF_{AC}}$
$AC\ thickness = \frac{145.8}{2.54}$
AC thickness = 57.4mm = 0.19'

DETERMINATION OF AGGREGATE BASE THICKNESS

$AB\ thickness = \frac{GE_{AB}}{GF_{AB}}$

$GE_{TOTAL} = 0.975(TI).(100 - R_{SG})$
$GE_{TOTAL} = 0.975(4).(100 - 5)$
$GE_{TOTAL} = 370.5\ mm$

$GE_{AB} = GE_{TOTAL} - GE_{AC} - SF$
$GE_{AB} = 370.5 - 145.8 - 60$
$GE_{AB} = 164.7\ mm$

$AB\ thickness = \frac{GE_{AB}}{GF_{AB}}$

$AB\ thickness = \frac{164.7}{1.1}$

AB thickness = 149.73mm = 0.5'

MINUMUM PAVEMENT SECTION

0.19' AC OVER 0.5' CL2AB

Minimum Proposed Pavement Section on sheet C-201 = 0.21' asphalt over 0.63' class II base rock

AGENCY APPROVAL STAMP:

IDENTIFICATION STAMP
DIV. OF THE STATE ARCHITECT
APP: 01-120890 INC:
REVIEWED FOR
SS ☑ FLS ☑ ACS ☑
DATE: 10/25/2023

TLCDARCHITECTURE
520 Third St. #250
Santa Rosa, CA 95401
o: 707.525.5600
f: 707.525.5616
tlcd.com

CONSULTANT:

Brelje & Race
CONSULTING ENGINEERS
475 Aviation Boulevard, Suite 120
Santa Rosa, CA 95403
v: 707-576-1322
f: 707-576-0469
www.brce.com

STAMP:

REGISTERED PROFESSIONAL ENGINEER
PAUL V. BARTHOLOMEW
No. 40512
Exp. 2-31-23
CIVIL
STATE OF CALIFORNIA
10/02/23

REVISIONS:

Number	Date	Description

NAPA VALLEY COLLEGE WINE EDUCATION CENTER

2277 NAPA VALLEJO HWY
NAPA, CA 94558

NAPA VALLEY COLLEGE

DSA APPLICATION NUMBER
01-120890

TLCD PROJECT NUMBER:
21062/2701.17

DATE:
8/30/2023

DRAWN BY:
PIT

CHECKED BY:
RG

PHASE 2 GRADING PLAN EDUCATION COMPLEX

C-101

© THESE DRAWINGS ARE INSTRUMENTS OF SERVICE AND ARE THE SOLE PROPERTY OF TLCD ARCHITECTURE. ANY USE WITHOUT WRITTEN CONSENT IS PROHIBITED.

TAB: C-101 GRAD MAIN PH2

08-29-23 gleason \2701\dwg\2701 17\2701.17 PLAN.dwg

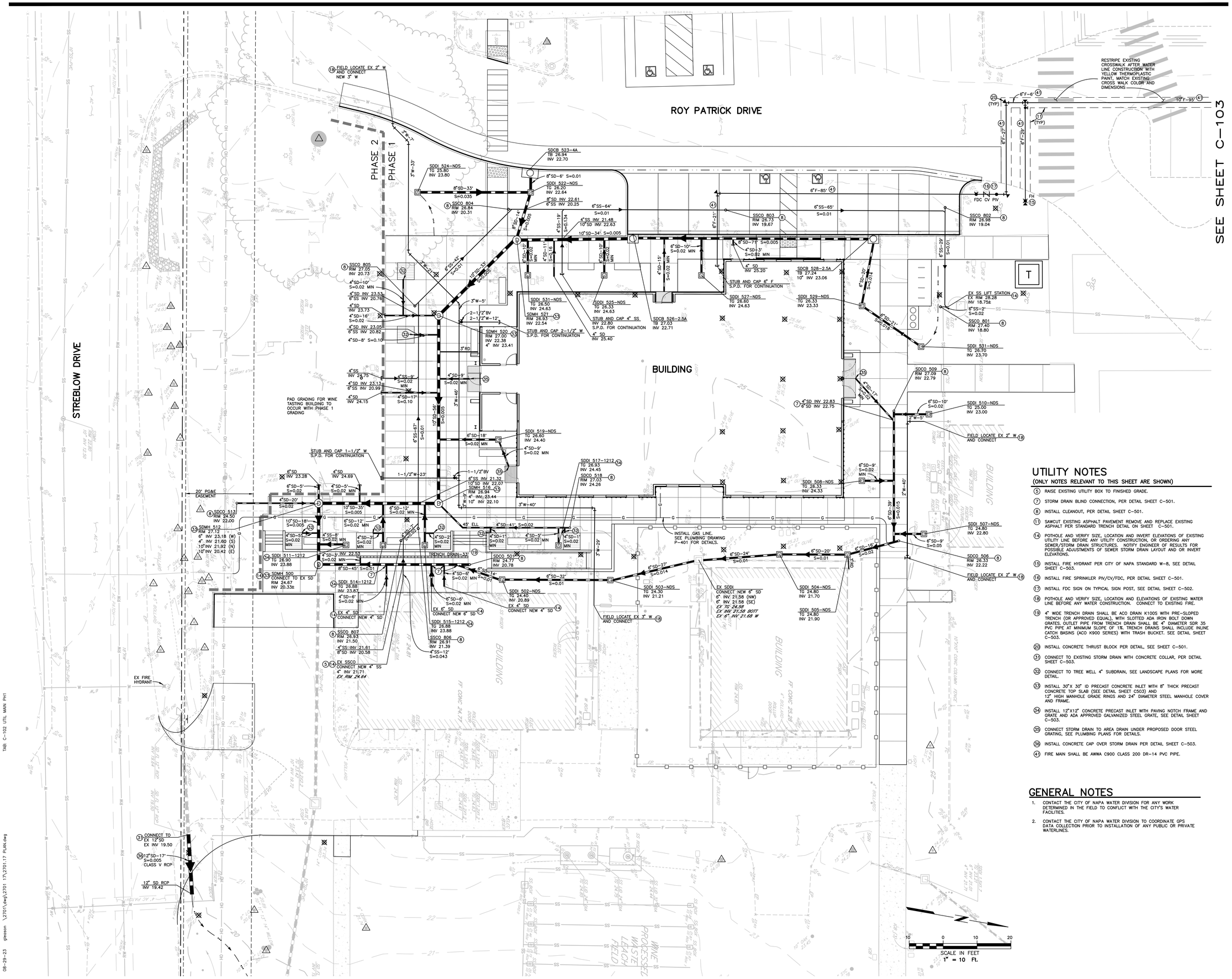

UTILITY NOTES

(ONLY NOTES RELEVANT TO THIS SHEET ARE SHOWN)

5. RAISE EXISTING UTILITY BOX TO FINISHED GRADE.
7. STORM DRAIN BLIND CONNECTION, PER DETAIL SHEET C-501.
8. INSTALL CLEANOUT, PER DETAIL SHEET C-501.
11. SAWCUT EXISTING ASPHALT PAVEMENT REMOVE AND REPLACE EXISTING ASPHALT PER STANDARD TRENCH DETAIL ON SHEET C-501.
14. POTHOLE AND VERIFY SIZE, LOCATION AND INVERT ELEVATIONS OF EXISTING UTILITY LINE BEFORE ANY UTILITY CONSTRUCTION, OR ORDERING ANY SEWER/STORM DRAIN STRUCTURES. NOTIFY ENGINEER OF RESULTS FOR POSSIBLE ADJUSTMENTS OF SEWER STORM DRAIN LAYOUT AND OR INVERT ELEVATIONS.
15. INSTALL FIRE HYDRANT PER CITY OF NAPA STANDARD W-8, SEE DETAIL SHEET C-503.
16. INSTALL FIRE SPRINKLER PIV/CV/FDC, PER DETAIL SHEET C-501.
17. INSTALL FDC SIGN ON TYPICAL SIGN POST, SEE DETAIL SHEET C-502.
18. POTHOLE AND VERIFY SIZE, LOCATION AND ELEVATIONS OF EXISTING WATER LINE BEFORE ANY WATER CONSTRUCTION. CONNECT TO EXISTING FIRE.
19. 4" WIDE TRENCH DRAIN SHALL BE ACO DRAIN K100S WITH PRE-SLOPED TRENCH (OR APPROVED EQUAL), WITH SLOTTED ADA IRON BOLT DOWN GRATES. OUTLET PIPE FROM TRENCH DRAIN SHALL BE 4" DIAMETER SDR 35 PVC PIPE AT MINIMUM SLOPE OF 1%. TRENCH DRAINS SHALL INCLUDE INLINE CATCH BASINS (ACO K900 SERIES) WITH TRASH BUCKET. SEE DETAIL SHEET C-503.
20. INSTALL CONCRETE THRUST BLOCK PER DETAIL, SEE SHEET C-501.
31. CONNECT TO EXISTING STORM DRAIN WITH CONCRETE COLLAR, PER DETAIL SHEET C-503.
32. CONNECT TO TREE WELL 4" SUBDRAIN, SEE LANDSCAPE PLANS FOR MORE DETAIL.
33. INSTALL 30"X 30" ID PRECAST CONCRETE INLET WITH 8" THICK PRECAST CONCRETE TOP SLAB (SEE DETAIL SHEET C503) AND 12" HIGH MANHOLE GRADE RINGS AND 24" DIAMETER STEEL MANHOLE COVER AND FRAME.
34. INSTALL 12"X12" CONCRETE PRECAST INLET WITH PAVING NOTCH FRAME AND GRATE AND ADA APPROVED GALVANIZED STEEL GRATE, SEE DETAIL SHEET C-503.
35. CONNECT STORM DRAIN TO AREA DRAIN UNDER PROPOSED DOOR STEEL GRATING, SEE PLUMBING PLANS FOR DETAILS.
36. INSTALL CONCRETE CAP OVER STORM DRAIN PER DETAIL SHEET C-503.
41. FIRE MAIN SHALL BE AWWA C900 CLASS 200 DR-14 PVC PIPE.

GENERAL NOTES

1. CONTACT THE CITY OF NAPA WATER DIVISION FOR ANY WORK DETERMINED IN THE FIELD TO CONFLICT WITH THE CITY'S WATER FACILITIES.
2. CONTACT THE CITY OF NAPA WATER DIVISION TO COORDINATE GPS DATA COLLECTION PRIOR TO INSTALLATION OF ANY PUBLIC OR PRIVATE WATERLINES.

AGENCY APPROVAL STAMP:

IDENTIFICATION STAMP
DIV. OF THE STATE ARCHITECT
APP: 01-120890 INC:
REVIEWED FOR
SS ☑ FLS ☑ ACS ☑
DATE: 10/25/2023

TLCDARCHITECTURE
520 Third St. #250
Santa Rosa, CA 95401
o: 707.525.5600
f: 707.525.5616
tlcd.com

CONSULTANT:

Brelje & Race
CONSULTING ENGINEERS
475 Aviation Boulevard, Suite 120
Santa Rosa, CA 95403
v: 707-576-1322
f: 707-576-0469
www.brce.com

STAMP:

REGISTERED PROFESSIONAL ENGINEER
PAUL C. BARTHEL
No. 40512
Exp. 3-31-25
CIVIL
STATE OF CALIFORNIA
10/10/23

REVISIONS:

Number	Date	Description

NAPA VALLEY COLLEGE WINE EDUCATION CENTER

2277 NAPA VALLEJO HWY
NAPA, CA 94558

NAPA VALLEY COLLEGE

DSA APPLICATION NUMBER: 01-120890
TLCD PROJECT NUMBER: 21062/2701.17
DATE: 8/30/2023
DRAWN BY: PIT
CHECKED BY: RG

PHASE 1
UTILITY PLAN
EDUCATION
COMPLEX

C-102

© THESE DRAWINGS ARE INSTRUMENTS OF SERVICE AND ARE THE SOLE PROPERTY OF TLCD ARCHITECTURE. ANY USE WITHOUT WRITTEN CONSENT IS PROHIBITED.

TAB: C-102 UTIL MAIN PH1

08-29-23 gleason \2701\dwg\2701 17\2701.17 PLAN.dwg

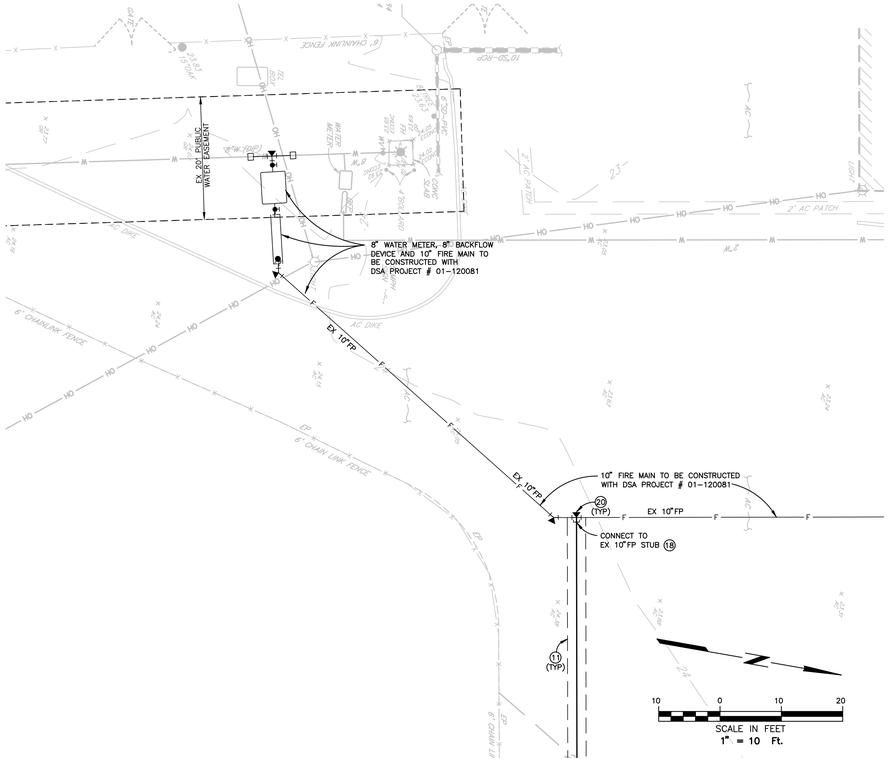

SEE ABOVE RIGHT

SEE LEFT MIDDLE

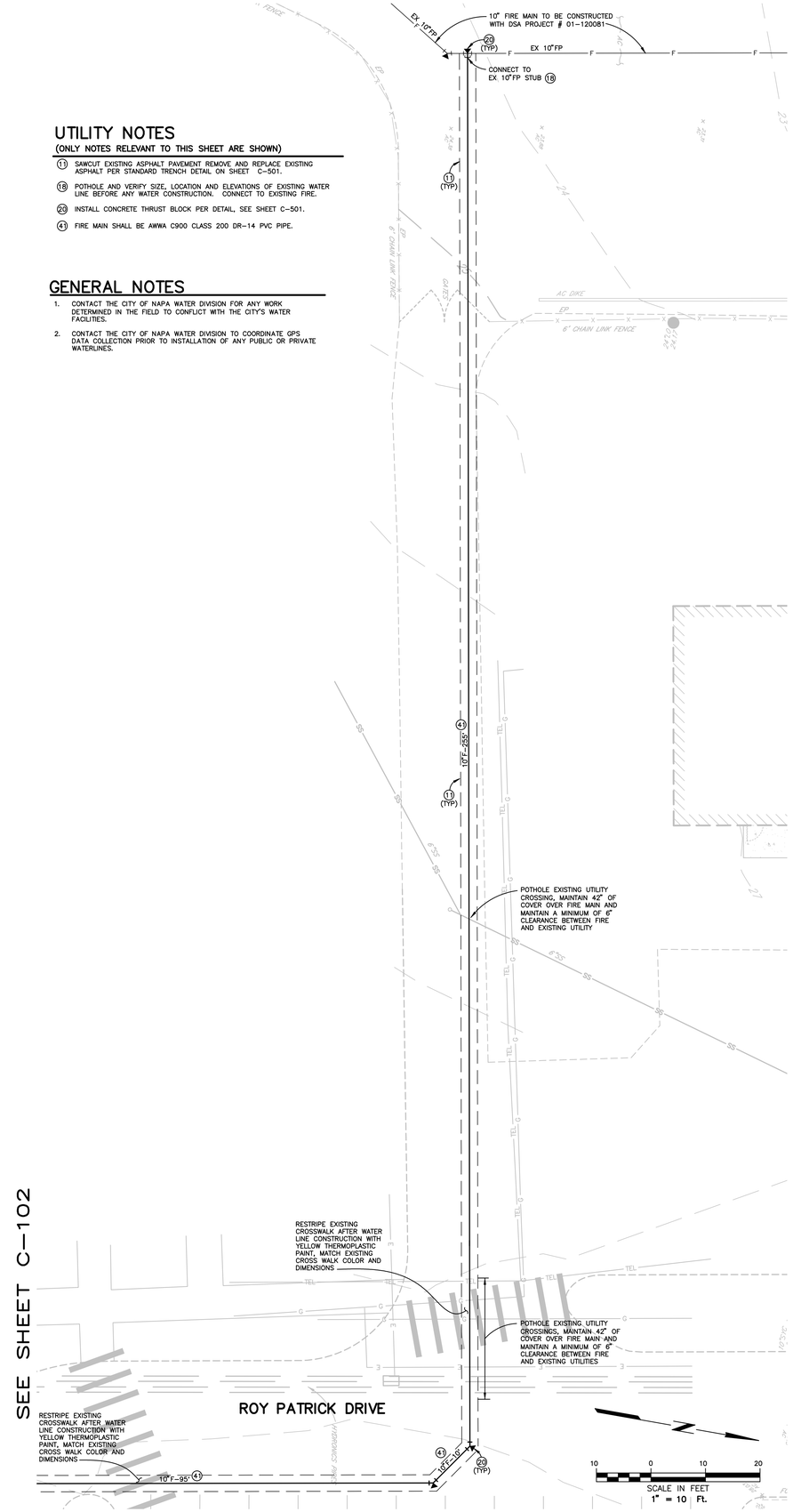

SEE SHEET C-102

UTILITY NOTES

(ONLY NOTES RELEVANT TO THIS SHEET ARE SHOWN)

(11) SAWCUT EXISTING ASPHALT PAVEMENT REMOVE AND REPLACE EXISTING ASPHALT PER STANDARD TRENCH DETAIL ON SHEET C-501.

(18) POTHOLE AND VERIFY SIZE, LOCATION AND ELEVATIONS OF EXISTING WATER LINE BEFORE ANY WATER CONSTRUCTION. CONNECT TO EXISTING FIRE.

(20) INSTALL CONCRETE THRUST BLOCK PER DETAIL, SEE SHEET C-501.

(41) FIRE MAIN SHALL BE AWWA C900 CLASS 200 DR-14 PVC PIPE.

GENERAL NOTES

1. CONTACT THE CITY OF NAPA WATER DIVISION FOR ANY WORK DETERMINED IN THE FIELD TO CONFLICT WITH THE CITY'S WATER FACILITIES.
2. CONTACT THE CITY OF NAPA WATER DIVISION TO COORDINATE GPS DATA COLLECTION PRIOR TO INSTALLATION OF ANY PUBLIC OR PRIVATE WATERLINES.

GRADING NOTES

(ONLY NOTES RELEVANT TO THIS SHEET ARE SHOWN)

(1) SAWCUT AND MATCH EXISTING IMPROVEMENTS.

(38) INSTALL EMBEDDED DETECTABLE WARNING SURFACE PER DETAIL SHEET C-502.

(39) SAWCUT AND REMOVE EXISTING DETECTABLE WARNING SURFACE AND CONCRETE. INSTALL NEW CONCRETE PER PEDESTRIAN PCC WALK SECTION DETAIL SHEET C-501, MATCH EXISTING SURROUNDING CONCRETE COLOR AND FINISH.

(40) SAWCUT REMOVE EXISTING CONCRETE, INSTALL NEW CONCRETE PER PEDESTRIAN PCC WALK SECTION DETAIL SHEET C-501. INSTALL 3' WIDE EMBEDDED DETECTABLE WARNING SURFACE PER DETAIL SHEET C-502.

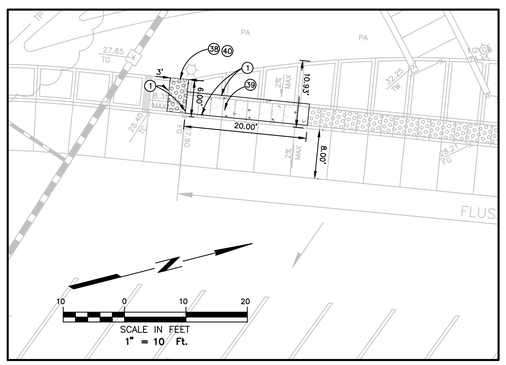

GRADING PLAN

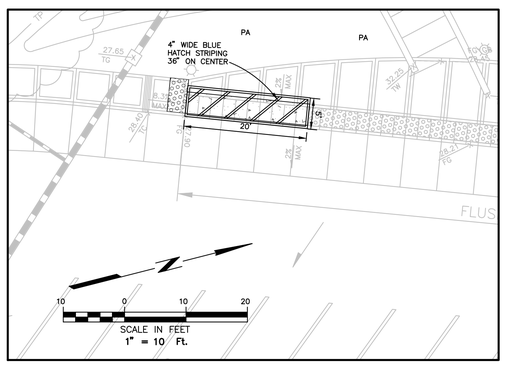

STRIPING PLAN

ACCESSIBLE DROP OFF AREA EAST

(REFERENCE ARCHITECTURAL PLAN SHEET G-002)

AGENCY APPROVAL STAMP:

IDENTIFICATION STAMP
DIV. OF THE STATE ARCHITECT
APP: 01-120890 INC:
REVIEWED FOR
SS ☑ FLS ☑ ACS ☑
DATE: 10/25/2023

TLCDARCHITECTURE
520 Third St. #250
Santa Rosa, CA 95401
o: 707.525.5600
f: 707.525.5616
tlcd.com

CONSULTANT:

Brelje & Race
CONSULTING ENGINEERS
475 Aviation Boulevard, Suite 120
Santa Rosa, CA 95403
v: 707-576-1322
f: 707-576-0469
www.brce.com

STAMP:

REGISTERED PROFESSIONAL ENGINEER
RICHARD C. BARTHEL
No. 40512
Exp. 3-31-25
CIVIL
STATE OF CALIFORNIA
10/02/23

REVISIONS:

Number	Date	Description

NAPA VALLEY COLLEGE WINE EDUCATION CENTER

2277 NAPA VALLEJO HWY
NAPA, CA 94558

NAPA VALLEY COLLEGE

DSA APPLICATION NUMBER
01-120890

TLCD PROJECT NUMBER:
21062/2701.17

DATE:
8/30/2023

DRAWN BY:
PIT

CHECKED BY:
RG

PHASE 1
UTILITY PLAN
FIRE LINE &
EAST DROP OFF
AREA

C-103

© THESE DRAWINGS ARE INSTRUMENTS OF SERVICE AND ARE THE SOLE PROPERTY OF TLCD ARCHITECTURE. ANY USE WITHOUT WRITTEN CONSENT IS PROHIBITED.

TAB: C-103 UTIL WEST PH1
08-29-23 glesson \2701\dwg\2701 17\2701.17 PLAN.dwg

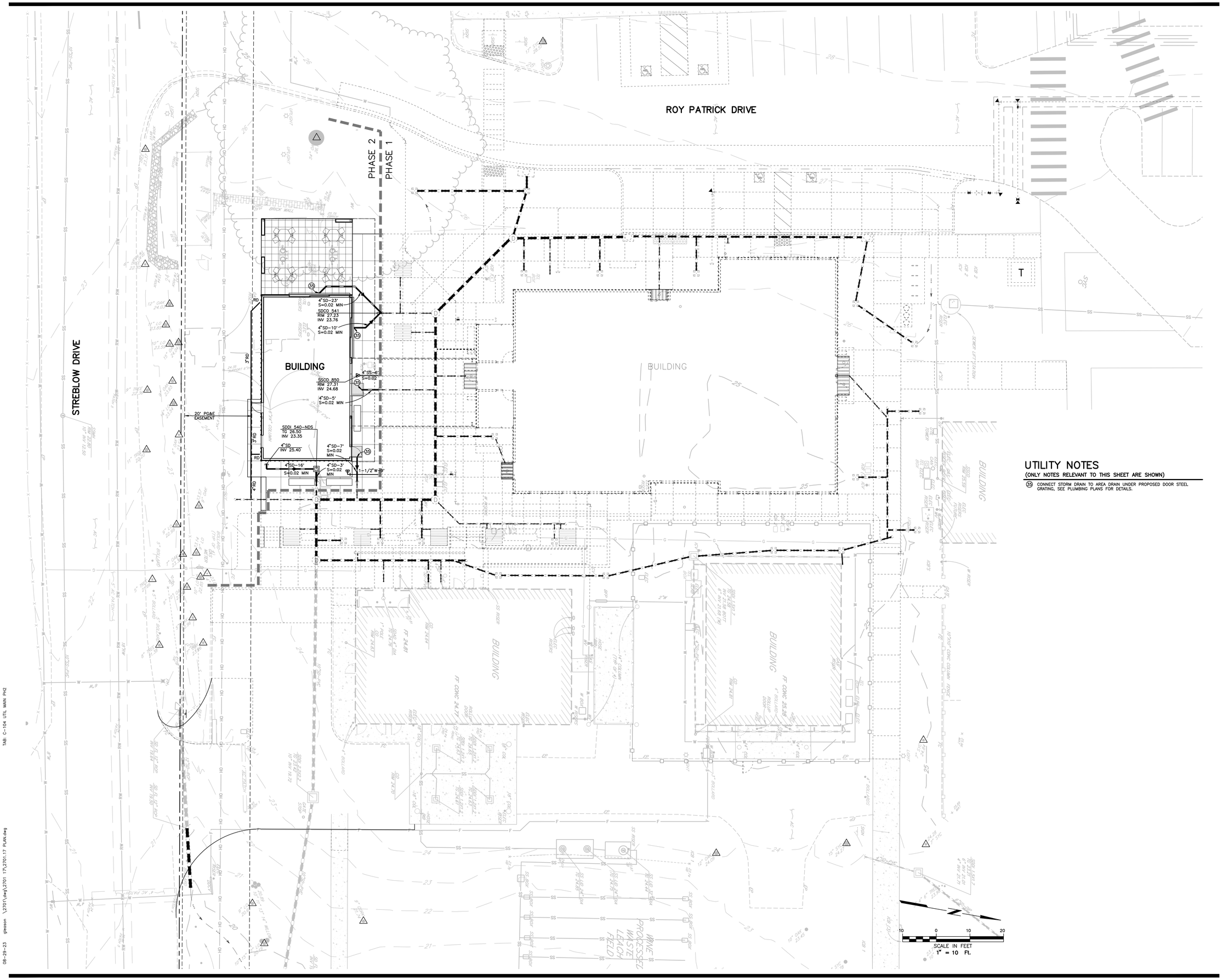

UTILITY NOTES

(ONLY NOTES RELEVANT TO THIS SHEET ARE SHOWN)

(59) CONNECT STORM DRAIN TO AREA DRAIN UNDER PROPOSED DOOR STEEL GRATING, SEE PLUMBING PLANS FOR DETAILS.

AGENCY APPROVAL STAMP:

IDENTIFICATION STAMP
DIV. OF THE STATE ARCHITECT
APP: 01-120890 INC:
REVIEWED FOR
SS ☑ FLS ☑ ACS ☑
DATE: 10/25/2023

TLCDARCHITECTURE
520 Third St. #250
Santa Rosa, CA 95401
o: 707.525.5600
f: 707.525.5616
tlcd.com

CONSULTANT:

Brelje & Race
CONSULTING ENGINEERS
475 Aviation Boulevard, Suite 120
Santa Rosa, CA 95403
v: 707-576-1322
f: 707-576-0469
www.brce.com

STAMP:

REGISTERED PROFESSIONAL ENGINEER
PAUL T. BARTHEL
No. 40512
Exp. 3-31-25
CIVIL
STATE OF CALIFORNIA
10/02/23

REVISIONS:

Number	Date	Description

NAPA VALLEY COLLEGE WINE EDUCATION CENTER

2277 NAPA VALLEJO HWY
NAPA, CA 94558

NAPA VALLEY COLLEGE

DSA APPLICATION NUMBER
01-120890

TLCD PROJECT NUMBER:
21062/2701.17

DATE:
8/30/2023

DRAWN BY:
PIT

CHECKED BY:
RG

PHASE 2 UTILITY PLAN EDUCATION COMPLEX

C-104

© THESE DRAWINGS ARE INSTRUMENTS OF SERVICE AND ARE THE SOLE PROPERTY OF TLCD ARCHITECTURE. ANY USE WITHOUT WRITTEN CONSENT IS PROHIBITED.

08-29-23 gleason \2701\dwg\2701 17\2701.17 PLAN.dwg TAB: C-104 UTIL MAIN PH2

PAVEMENT STRUCTURAL SECTION

LOCATION	AC*	CL2 AB**	PCC***
CONCRETE (PEDESTRIAN) PER DETAIL SHEET C-501 SEE LANDSCAPE PLANS FOR PEDESTRIAN CONCRETE COLOR AND FINISH REQUIREMENTS.	–	0.33'	0.33'
CONCRETE (VEHICULAR) PER DETAIL SHEET C-501	–	0.50'	0.50'
ASPHALT CONCRETE (AC) PARKING STALL – TI=4	0.21'	0.63'	–
ASPHALT CONCRETE (AC) PARKING AISLE – TI=5	0.25'	0.83'	–
ASPHALT CONCRETE (AC) DRIVE AISLE – TI=6	0.29'	1.08'	–

* TYPE A 1/2 MAX MEDIUM ASPHALT

** 3/4" CLASS 2 AGGREGATE BASE PER CALTRANS SECTION 26, COMPACTED TO 95% RELATIVE COMPACTION

*** CONCRETE PER CALTRANS STANDARD SPECIFICATIONS SECTION 90-2 "MINOR CONCRETE". SEE CIVIL CONCRETE SPECIFICATIONS FOR MORE DETAIL.

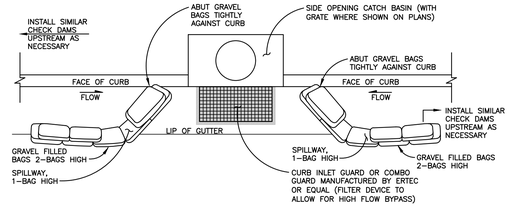

CATCH BASIN PROTECTION – AT SUMP

NOT TO SCALE

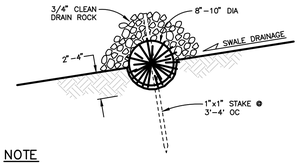

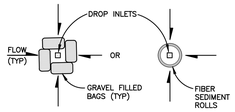

MINOR INLET PROTECTION

NOT TO SCALE

NOTE

1. FIBER ROLL INSTALLATION REQUIRES THE PLACEMENT AND SECURE STAKING OF THE ROLL IN A TRENCH, 2"–4" DEEP, DUG ON A "V" PATTERN INTO THE SIDES AND BOTTOM OF THE SWALE. RUNOFF MUST NOT BE ALLOWED TO RUN UNDER OR AROUND ROLL. COVER THE FIBER ROLL IN THE FLOWLINE OF THE SWALE WITH 3/4" CLEAN DRAIN ROCK TO PROVIDE ADDITIONAL FILTERING.

FIBER ROLL SWALE CHECK

NOT TO SCALE

NOTES

1. SILT FENCE SHALL BE PLACED ON SLOPE CONTOURS TO MAXIMIZE PONDING EFFICIENCY.
2. INSPECT AND REPAIR FENCE AFTER EACH STORM EVENT AND REMOVE SEDIMENT WHEN NECESSARY. 9" (225mm) MAXIMUM RECOMMENDED STORAGE HEIGHT.
3. REMOVED SEDIMENT SHALL BE DEPOSITED TO AN AREA THAT WILL NOT CONTRIBUTE SEDIMENT OFF-SITE AND CAN BE PERMANENTLY STABILIZED.

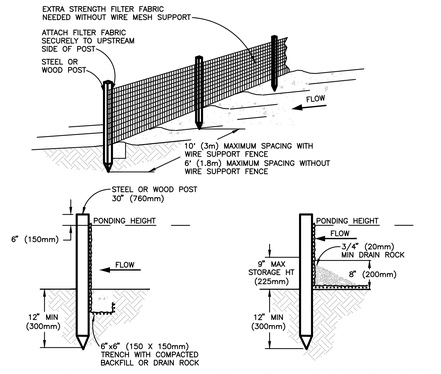

TRENCH

INSTALLATION WITHOUT TRENCHING

SILT FENCE

NOT TO SCALE

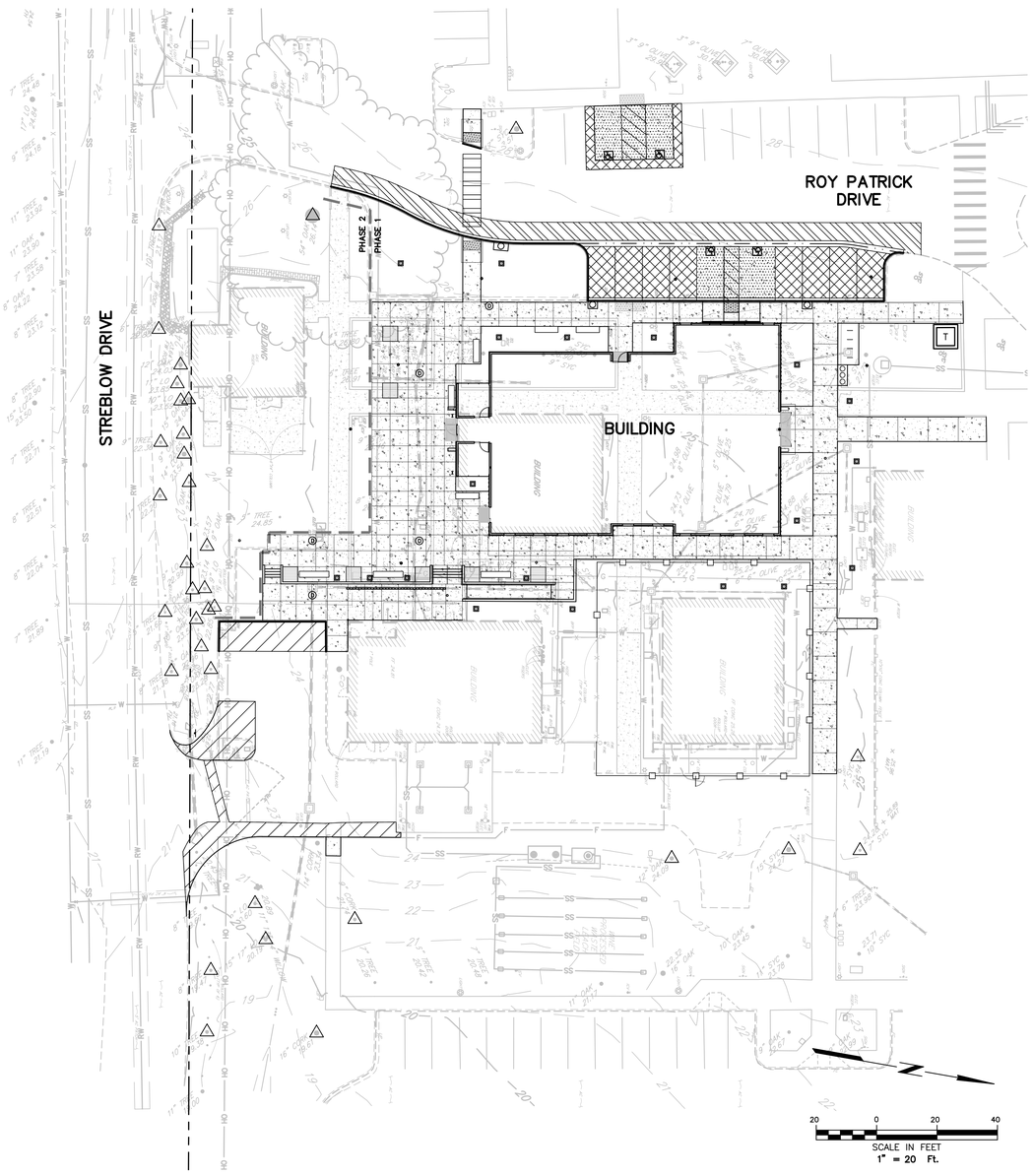

PAVEMENT STRUCTURAL SECTION PLAN

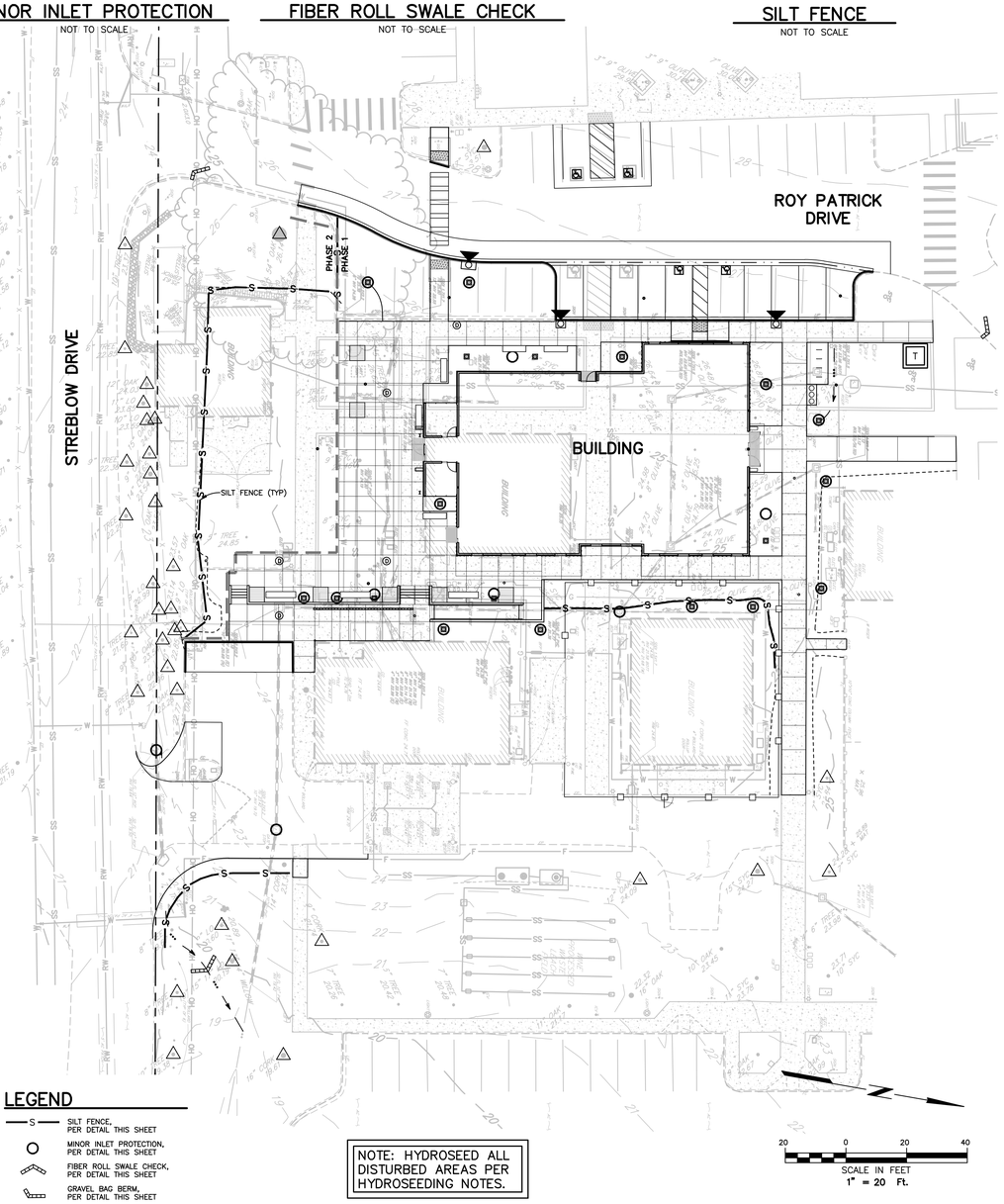

LEGEND

- S — SILT FENCE, PER DETAIL THIS SHEET
- MINOR INLET PROTECTION, PER DETAIL THIS SHEET
- FIBER ROLL SWALE CHECK, PER DETAIL THIS SHEET
- GRAVEL BAG BERM, PER DETAIL THIS SHEET
- CATCH BASIN PROTECTION, PER DETAIL THIS SHEET

NOTE: HYDROSEED ALL DISTURBED AREAS PER HYDROSEEDING NOTES.

EROSION CONTROL PLAN

AGENCY APPROVAL STAMP:

IDENTIFICATION STAMP
DIV. OF THE STATE ARCHITECT
APP: 01-120890 INC:
REVIEWED FOR
SS ☑ FLS ☑ ACS ☑
DATE: 10/25/2023

TLCDARCHITECTURE
520 Third St. #250
Santa Rosa, CA 95401
o: 707.525.5600
f: 707.525.5616
tlcd.com

CONSULTANT:

Brelje & Race
CONSULTING ENGINEERS
475 Aviation Boulevard, Suite 120
Santa Rosa, CA 95403
v: 707-576-1322
f: 707-576-0469
www.brce.com

STAMP:

REGISTERED PROFESSIONAL ENGINEER
RYAN L. BARTHEL
No. 40512
Exp. 3-31-25
CIVIL
STATE OF CALIFORNIA
10/02/23

REVISIONS:

Number	Date	Description

NAPA VALLEY COLLEGE WINE EDUCATION CENTER

2277 NAPA VALLEJO HWY
NAPA, CA 94558

NAPA VALLEY COLLEGE

DSA APPLICATION NUMBER
01-120890

TLCD PROJECT NUMBER
21062/2701.17

DATE:
8/30/2023

DRAWN BY:
PIT

CHECKED BY:
RG

PHASE 1 PAVEMENT STRUCTURAL SECTION & EROSION CONTROL PLAN

C-201

© THESE DRAWINGS ARE INSTRUMENTS OF SERVICE AND ARE THE SOLE PROPERTY OF TLCD ARCHITECTURE. ANY USE WITHOUT WRITTEN CONSENT IS PROHIBITED.

08-29-23 Pothesi \2701\dwg\2701 17\2701.17 PAVEMENT.dwg TAB: C-201 PAVE EROS PH1

PAVEMENT STRUCTURAL SECTION

LOCATION	AC*	CL2 AB**	PCC***
CONCRETE (PEDESTRIAN) PER DETAIL SHEET C-501 SEE LANDSCAPE PLANS FOR PEDESTRIAN CONCRETE COLOR AND FINISH REQUIREMENTS.	–	0.33'	0.33'
CONCRETE PAVERS, SEE LANDSCAPE PLANS FOR DETAILS	–	–	–

* TYPE A 1/2 MAX MEDIUM ASPHALT

** 3/4" CLASS 2 AGGREGATE BASE PER CALTRANS SECTION 26, COMPACTED TO 95% RELATIVE COMPACTION

*** CONCRETE PER CALTRANS STANDARD SPECIFICATIONS SECTION 90-2 "MINOR CONCRETE". SEE CIVIL CONCRETE SPECIFICATIONS FOR MORE DETAIL.

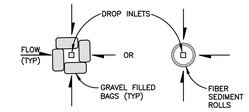

MINOR INLET PROTECTION

NOT TO SCALE

LEGEND

—— S —— SILT FENCE, PER DETAIL THIS SHEET

○ MINOR INLET PROTECTION, PER DETAIL THIS SHEET

NOTE: HYDROSEED ALL DISTURBED AREAS PER HYDROSEEDING NOTES.

NOTES

1. SILT FENCE SHALL BE PLACED ON SLOPE CONTOURS TO MAXIMIZE PONDING EFFICIENCY.
2. INSPECT AND REPAIR FENCE AFTER EACH STORM EVENT AND REMOVE SEDIMENT WHEN NECESSARY. 9" (225mm) MAXIMUM RECOMMENDED STORAGE HEIGHT.
3. REMOVED SEDIMENT SHALL BE DEPOSITED TO AN AREA THAT WILL NOT CONTRIBUTE SEDIMENT OFF-SITE AND CAN BE PERMANENTLY STABILIZED.

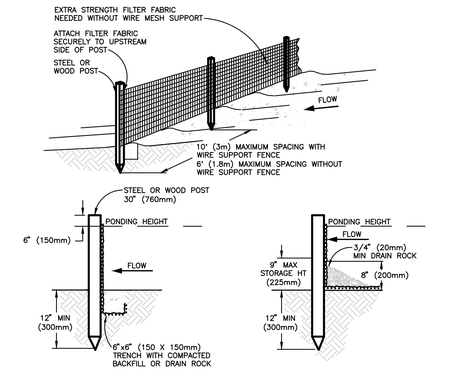

SILT FENCE

NOT TO SCALE

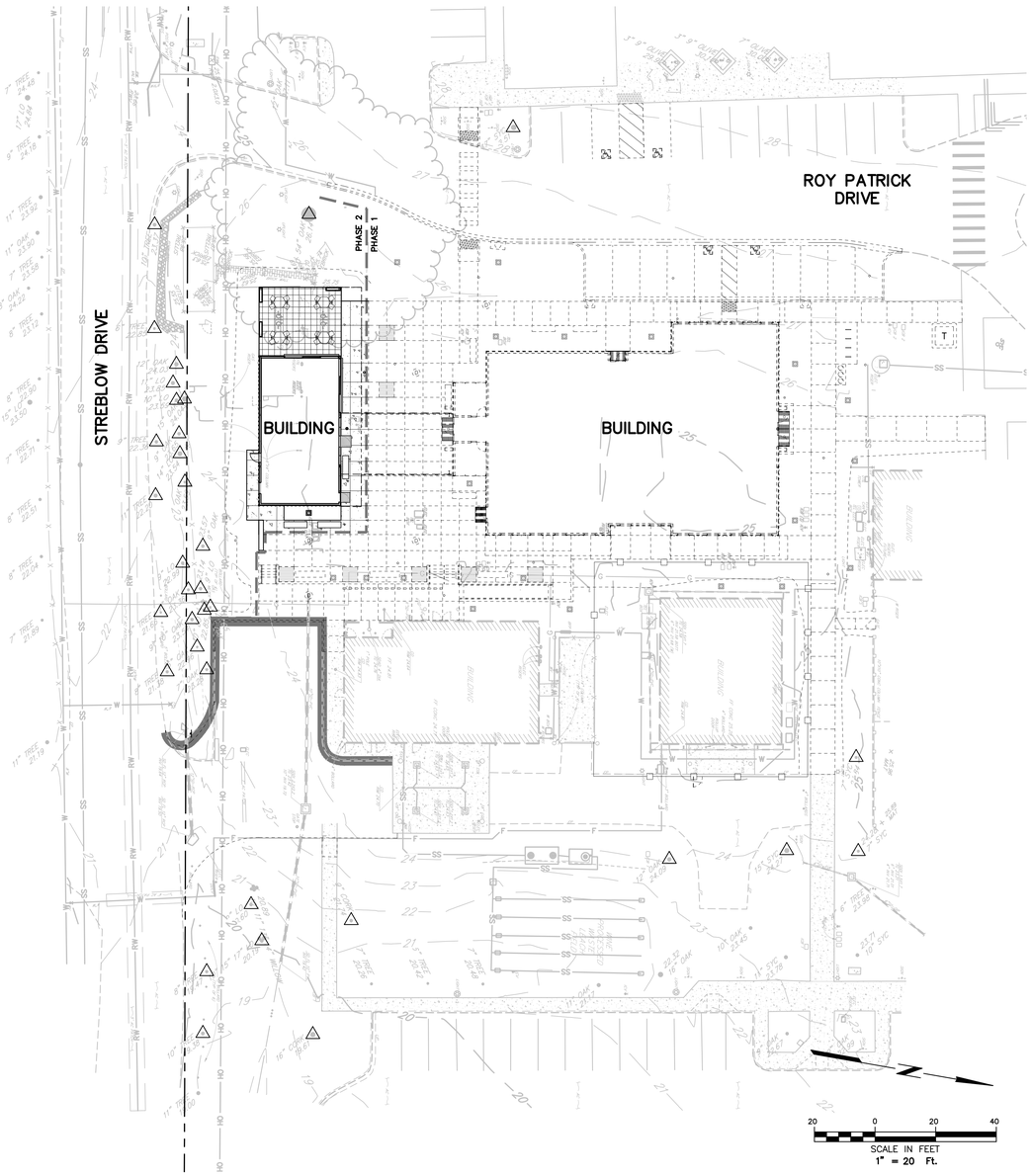

PAVEMENT STRUCTURAL SECTION PLAN

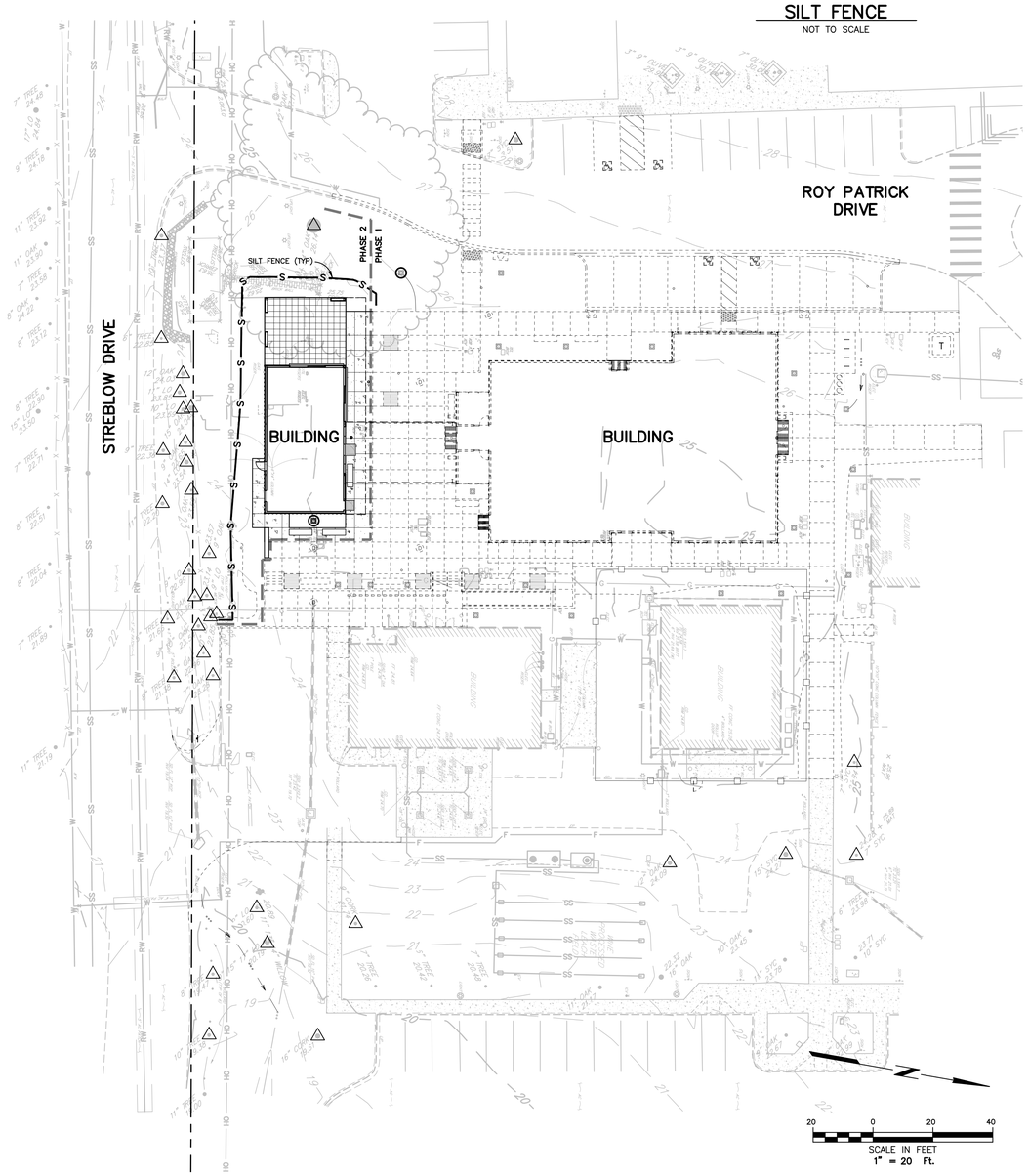

EROSION CONTROL PLAN

AGENCY APPROVAL STAMP:

IDENTIFICATION STAMP
DIV. OF THE STATE ARCHITECT
APP: 01-120890 INC:
REVIEWED FOR
SS ☑ FLS ☑ ACS ☑
DATE: 10/25/2023

TLCDARCHITECTURE
520 Third St. #250
Santa Rosa, CA 95401
o: 707.525.5600
f: 707.525.5616
tlcd.com

CONSULTANT:

Brelje & Race
CONSULTING ENGINEERS
475 Aviation Boulevard, Suite 120
Santa Rosa, CA 95403
v: 707-576-1322
f: 707-576-0469
www.brce.com

STAMP:

REGISTERED PROFESSIONAL ENGINEER
RICHARD L. BARTHOLOMEW
No. 40512
Exp. 3-31-25
CIVIL
STATE OF CALIFORNIA
10/10/23

REVISIONS:

Number	Date	Description

NAPA VALLEY COLLEGE WINE EDUCATION CENTER

2277 NAPA VALLEJO HWY
NAPA, CA 94558

NAPA VALLEY COLLEGE

DSA APPLICATION NUMBER
01-120890

TLCD PROJECT NUMBER:
21062/2701.17

DATE:
8/30/2023

DRAWN BY:
PIT

CHECKED BY:
RG

PHASE 2 PAVEMENT STRUCTURAL SECTION & EROSION CONTROL PLAN

C-202

© THESE DRAWINGS ARE INSTRUMENTS OF SERVICE AND ARE THE SOLE PROPERTY OF TLCD ARCHITECTURE. ANY USE WITHOUT WRITTEN CONSENT IS PROHIBITED.

08-29-23 Potheol \2701\dwg\2701 17\2701.17 PAVEMENT.dwg TAB: C-202 PAVE EROS PH2

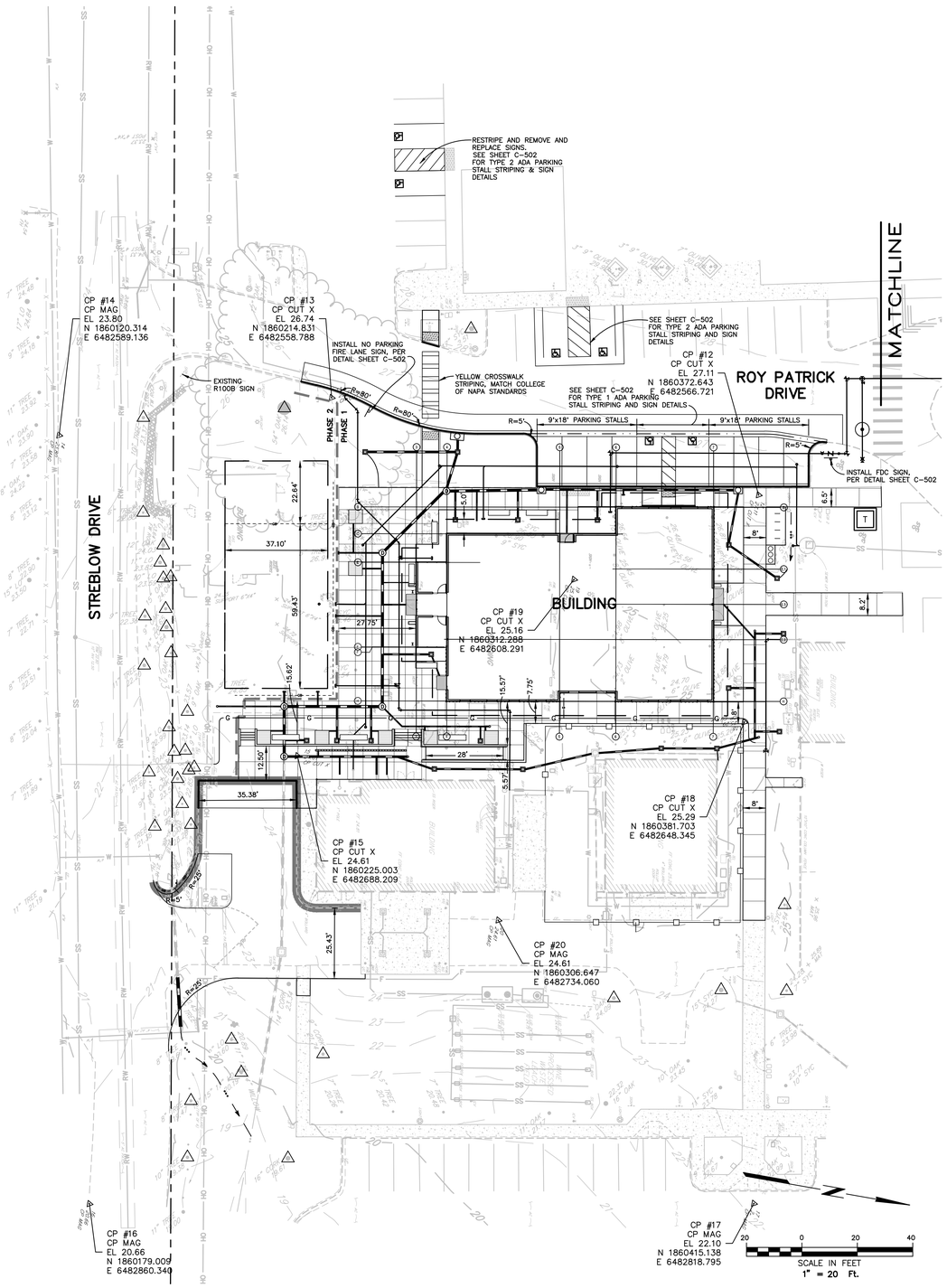

LAYOUT PLAN EDUCATION COMPLEX

LEGEND

- BLUE RETROREFLECTIVE FIRE HYDRANT PAVEMENT MARKER
- RED CURB WHERE SHOWN ON PLAN
- PROPOSED SIGN
- TREE TO BE SAVED

SIGNING AND STRIPING NOTES

1. ALL CURBS (TOP AND SIDES) ADJACENT TO FIRE LANES SHALL BE PAINTED RED WITH ACCEPTABLE RED CURB PAINT. THE WORDS "FIRE LANE – NO PARKING" SHALL BE STENCILED ON THE TOP OF ALL RED PAINTED. LETTERING SHALL BE WHITE IN COLOR, 3" HIGH AND HAVE 3/4" STROKE.
2. PARKING STALL STRIPING SHALL BE 4" WIDE WHITE, SPACING AND LENGTH AS INDICATED ON THE PLAN.

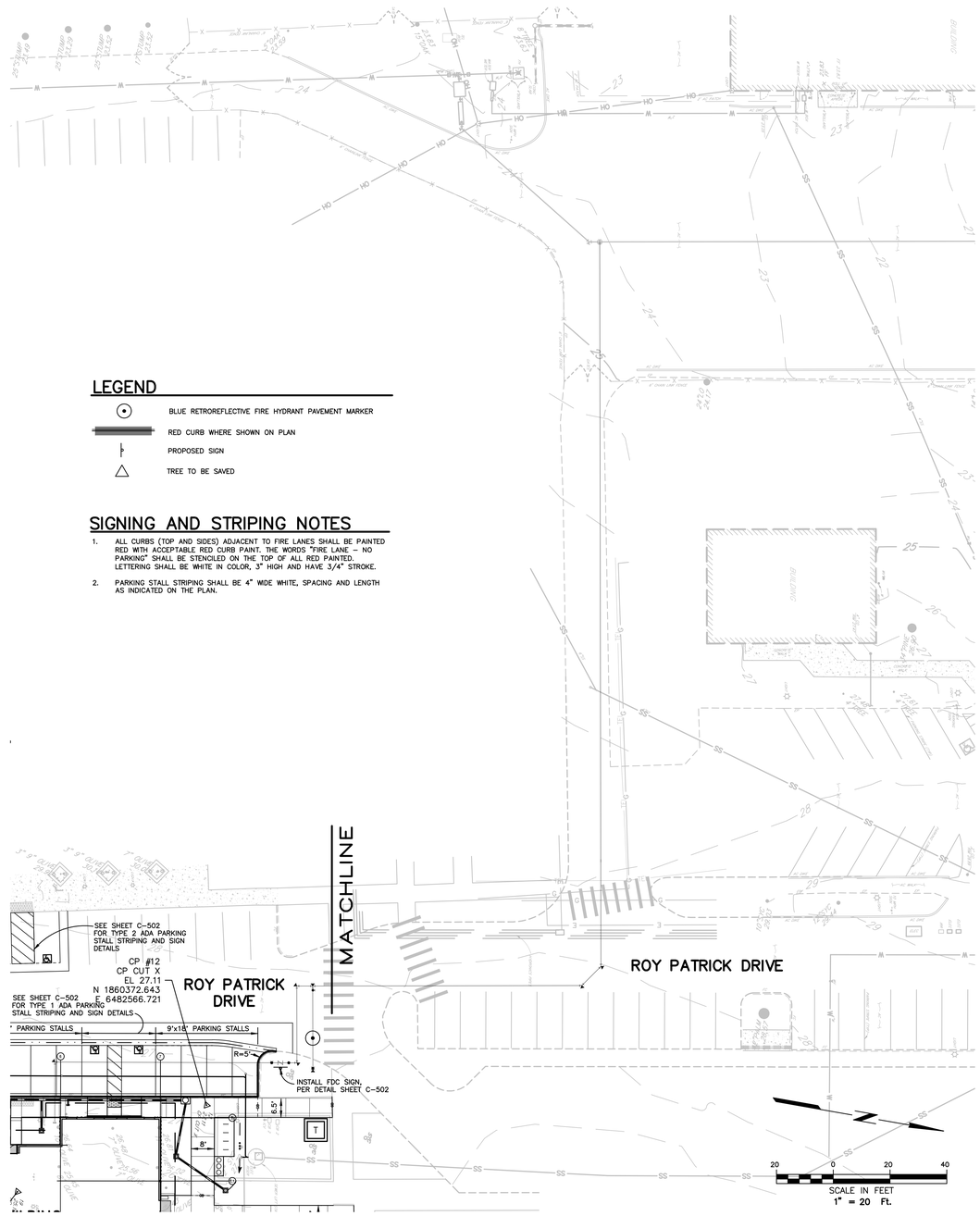

LAYOUT PLAN FIRE LINE

AGENCY APPROVAL STAMP:

IDENTIFICATION STAMP
DIV. OF THE STATE ARCHITECT
APP: 01-120890 INC:
REVIEWED FOR
SS ☑ FLS ☑ ACS ☑
DATE: 10/25/2023

TLCDARCHITECTURE
520 Third St. #250
Santa Rosa, CA 95401
o: 707.525.5600
f: 707.525.5616
tlcd.com

CONSULTANT:

Brelje & Race
CONSULTING ENGINEERS
475 Aviation Boulevard, Suite 120
Santa Rosa, CA 95403
v: 707-576-1322
f: 707-576-0469
www.brce.com

STAMP:

REGISTERED PROFESSIONAL ENGINEER
PAUL V. BARTHOLOMEW
No. 40512
Exp. 3-31-25
CIVIL
STATE OF CALIFORNIA
10/02/23

REVISIONS:

Number	Date	Description

NAPA VALLEY COLLEGE WINE EDUCATION CENTER

2277 NAPA VALLEJO HWY
NAPA, CA 94558

NAPA VALLEY COLLEGE

DSA APPLICATION NUMBER: 01-120890
TLCD PROJECT NUMBER: 21062/2701.17
DATE: 8/30/2023
DRAWN BY: PIT
CHECKED BY: RG

PHASE 1
LAYOUT PLAN

C-203

© THESE DRAWINGS ARE INSTRUMENTS OF SERVICE AND ARE THE SOLE PROPERTY OF TLCD ARCHITECTURE. ANY USE WITHOUT WRITTEN CONSENT IS PROHIBITED.

TAB: C-203 LAYOUT PH1

09-29-23 Patheal \2701\dwg\2701 17\2701.17 PAVEMENT.dwg

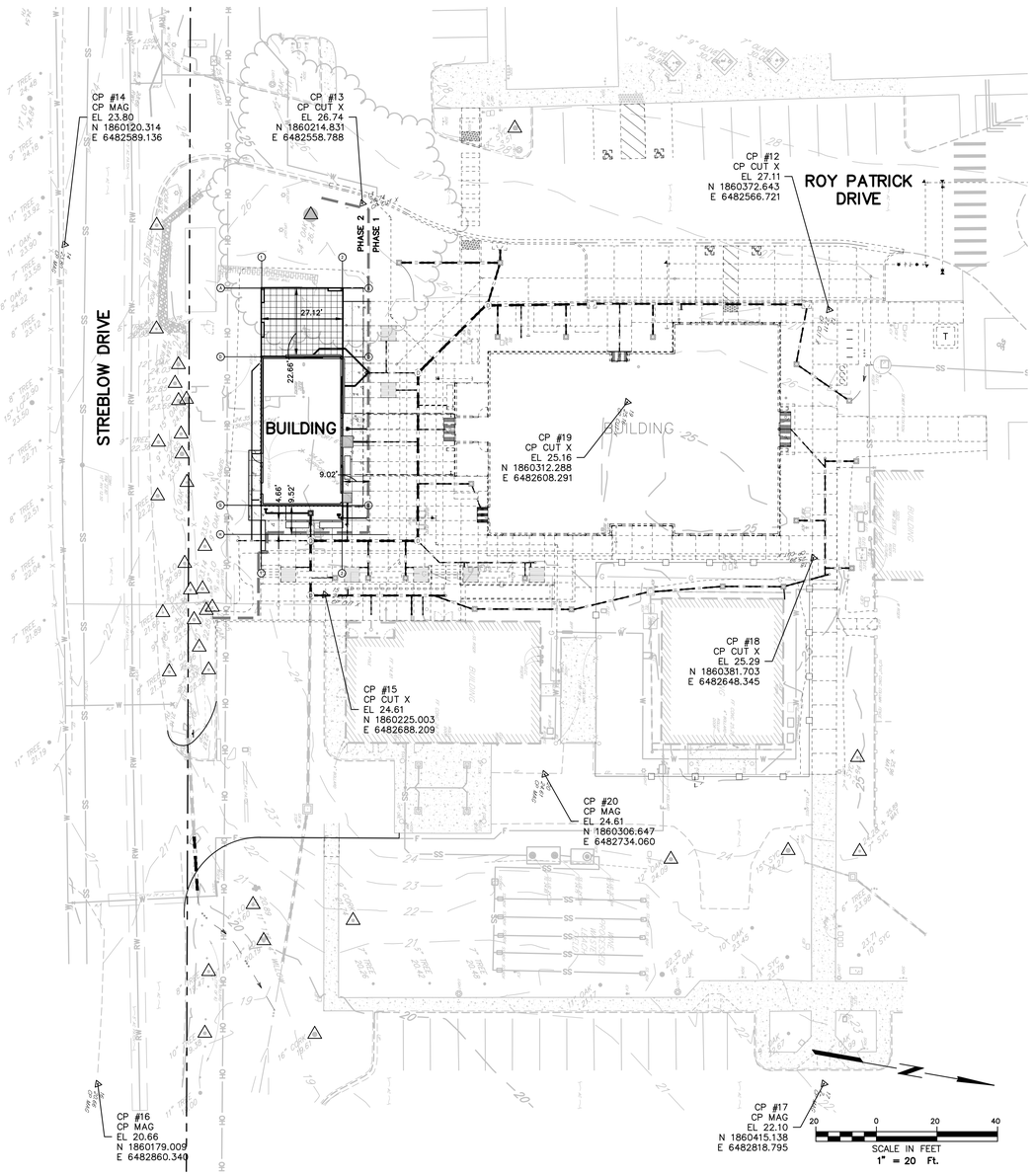

LAYOUT PLAN EDUCATION COMPLEX

AGENCY APPROVAL STAMP:

IDENTIFICATION STAMP
DIV. OF THE STATE ARCHITECT
APP: 01-120890 INC:
REVIEWED FOR
SS ☑ FLS ☑ ACS ☑
DATE: 10/25/2023

TLCDARCHITECTURE
520 Third St. #250
Santa Rosa, CA 95401
o: 707.525.5600
f: 707.525.5616
tlcd.com

CONSULTANT:

Brelje & Race
CONSULTING ENGINEERS
475 Aviation Boulevard, Suite 120
Santa Rosa, CA 95403
v: 707-576-1322
f: 707-576-0469
www.brce.com

STAMP:

REGISTERED PROFESSIONAL ENGINEER
PAUL V. BARTHELMI
No. 40512
Exp. 3-31-25
CIVIL
STATE OF CALIFORNIA
10/02/23

REVISIONS:

Number	Date	Description

NAPA VALLEY COLLEGE WINE EDUCATION CENTER

2277 NAPA VALLEJO HWY
NAPA, CA 94558

NAPA VALLEY COLLEGE

DSA APPLICATION NUMBER
01-120890

TLCD PROJECT NUMBER:
21062/2701.17

DATE:
8/30/2023

DRAWN BY:
PIT

CHECKED BY:
RG

PHASE 2 LAYOUT PLAN

C-204

© THESE DRAWINGS ARE INSTRUMENTS OF SERVICE AND ARE THE SOLE PROPERTY OF TLCD ARCHITECTURE. ANY USE WITHOUT WRITTEN CONSENT IS PROHIBITED.

08-29-23 Patheal \2701\dwg\2701 17\2701.17 PAVEMENT.dwg TAB: C-204 LAYOUT PH2

CURB AND GUTTER NOTES

1. SUBGRADE SHALL BE COMPACTED TO 95% RELATIVE COMPACTION.
2. CLASS 2 AGGREGATE BASE SHALL BE COMPACTED TO 95% RELATIVE COMPACTION.
3. CONCRETE SHALL BE CLASS B, CONTAINING NOT LESS THAN 5 SACKS CEMENT PER CUBIC YARD AND MINIMUM F'C=3,000 PSI.
4. FINISHED PAVEMENT GRADE SHALL BE 1/4" ABOVE LIP OF GUTTER.
5. EXPANSION JOINTS, 1/4 INCH WIDE, SHALL BE INSTALLED AT EACH SIDE OF STRUCTURES, AT ENDS OF CURB RETURNS AND AT THE TOP OF DRIVEWAY TAPERS.
6. EXPANSION JOINTS SHALL BE INSTALLED AT 50 FOOT INTERVALS, WITH WEAKENED PLANE JOINTS EVERY 15 FEET.
7. GUTTER SLOPE SHALL BE 5% MAXIMUM (9/16" PER FOOT) AT ALL WALKWAYS FOR ADA COMPLIANCE.

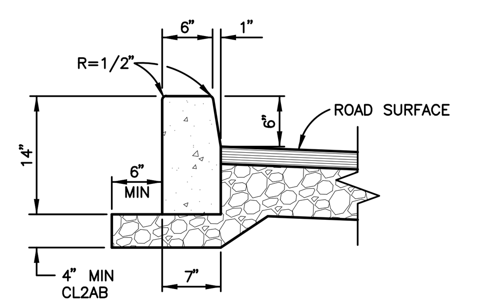

TYPE ⟨1⟩ STANDARD VERTICAL CURB

NOT TO SCALE

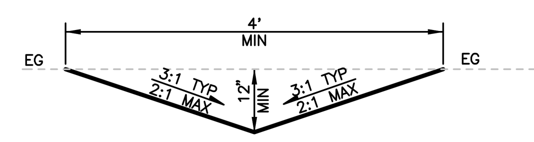

NOTE
ALL SWALES SHALL HAVE SLOPES ≥ 0.5%

TYPICAL SWALE

NOT TO SCALE

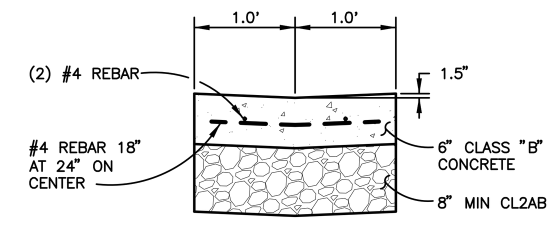

VALLEY GUTTER

NOT TO SCALE

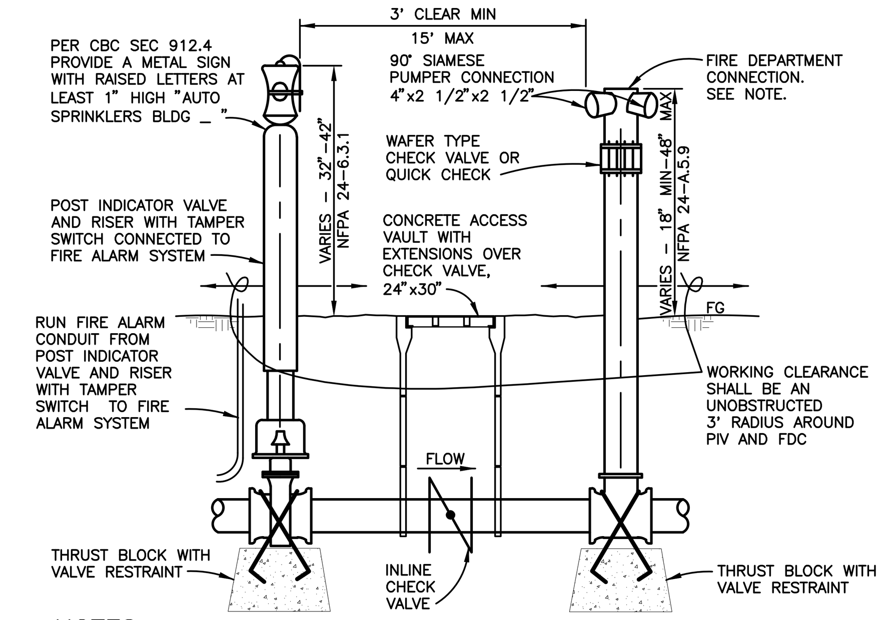

NOTES

1. ALL BELOW GRADE PIPE SHALL BE DUCTILE IRON.
2. PROVIDE SIGN IDENTIFYING THAT THIS FDC'S SERVES THE BUILDING SPRINKLERS. SIGNS SHALL HAVE A MINIMUM DIMENSION OF 18" BY 18" AND BE CONSTRUCTED OF STEEL OR ALUMINUM AND HAVE A RED REFLECTIVE BACKGROUND AND WHITE REFLECTIVE LETTERS AND A 3/8" WIDE WHITE REFLECTIVE BORDER. FDC SIGN SHALL BE INSTALLED NEAR THE FDC BUT SHALL NOT BE PLACED IN A AREA THAT WILL INTERFERE WITH THE OPERATION OF THE FDC. FDC SIGN SHALL BE INSTALLED TO FACE THE MAIN ENTRY ROAD.
3. RESTRAINED JOINTS ARE REQUIRED FOR ALL NEW CONSTRUCTION FROM GATE VALVE TO FDC. PIPE JOINTS SHALL BE RESTRAINED WITH EBAA IRON SERIES 2000PV OR EBAA IRON MEGALUG SERIES 1100 PIPE RESTRAINTS AND EBAA IRON SERIES 1500TD BELL RESTRAINT HARNESS.

PIV/CV/FDC

NOT TO SCALE

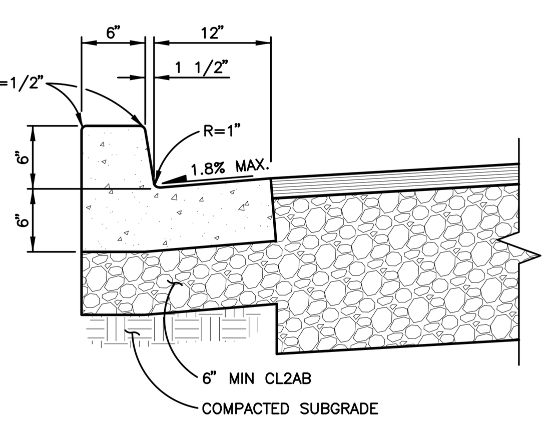

TYPE ⟨2⟩ CURB AND GUTTER

NOT TO SCALE

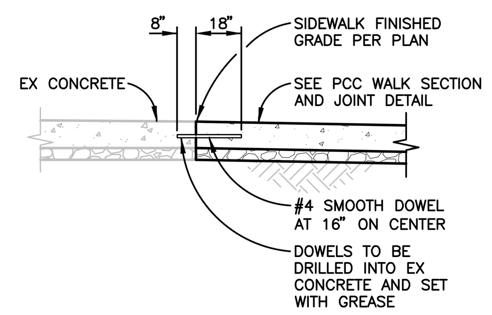

SIDEWALK DOWELING

NOT TO SCALE

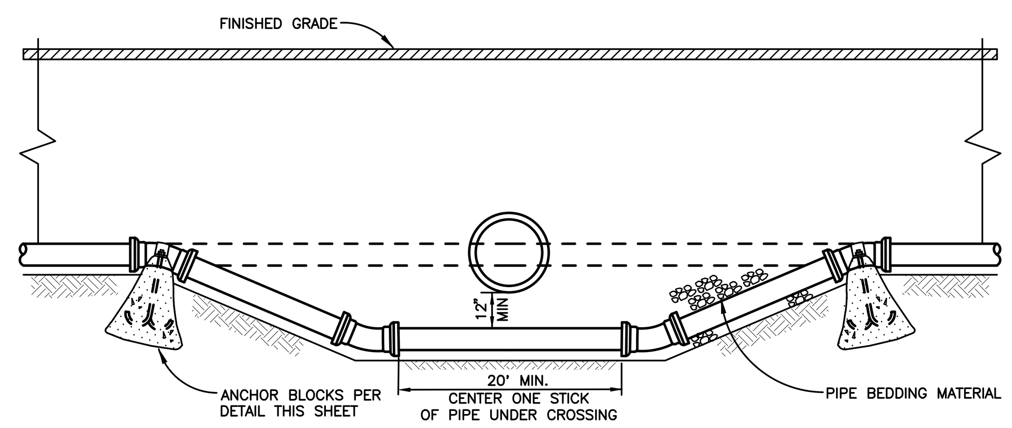

NOTES

1. ALL PIPE AND FITTINGS SHALL BE DUCTILE IRON AND SHALL BE WRAPPED IN POLYETHELENE.
2. ONLY MECHANICAL JOINT FITTINGS WITH RETAINER GLANDS OR FLANGED FITTINGS MAY BE USED.
3. ALL BENDS SHALL BE 45° OR 22 1/2° FITTINGS.
4. PVC WITH TIE RODS MAY BE SUBSTITUTED FOR DIP AND RETAINER GLANDS OR FLANGED FITTINGS.

TYPICAL WATER/FIRE MAIN LOWERING

NOT TO SCALE

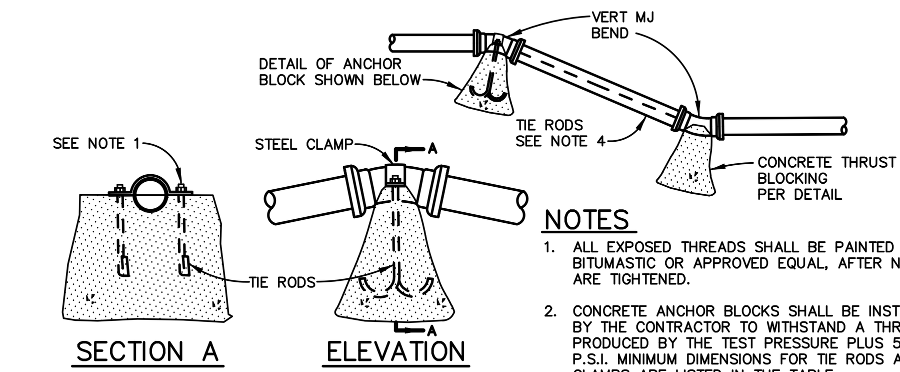

TYPICAL CONCRETE ANCHOR BLOCK FOR VERTICAL BEND

NOTES

1. ALL EXPOSED THREADS SHALL BE PAINTED WITH BITUMASTIC OR APPROVED EQUAL, AFTER NUTS ARE TIGHTENED.
2. CONCRETE ANCHOR BLOCKS SHALL BE INSTALLED BY THE CONTRACTOR TO WITHSTAND A THRUST PRODUCED BY THE TEST PRESSURE PLUS 50 P.S.I. MINIMUM DIMENSIONS FOR TIE RODS AND CLAMPS ARE LISTED IN THE TABLE.
3. USE MECHANICAL JOINT RETAINER GLANDS AT ALL FITTINGS.
4. FOR PVC PIPE, TIE RODS (THREADED FULL LENGTH) BETWEEN FITTINGS (MIN 2 REQD) MAY BE USED IN LIEU OF RETAINING GLANDS.
5. TIE ROD STEEL SHALL BE A.S.T.M. A615 GRADE 40 STEEL.

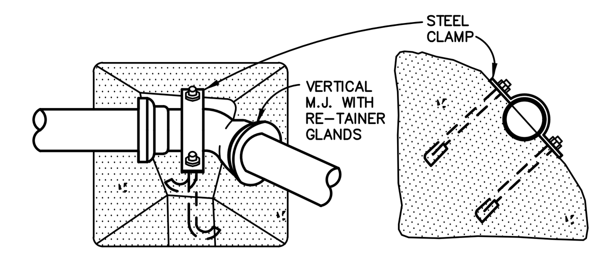

TYPICAL CONCRETE ANCHOR BLOCK FOR COMBINATION HORIZONTAL–VERTICAL BEND

PIPE SIZE	TIE RODS	STEEL CLAMPS
6"	5/8"	3" X 1/4"
8"	3/4"	3-1/4" X 1/4"
10"	1-1/4"	4" X 1/2"
12"	1-1/4"	4" X 1/2"
16"	1-3/8"	5" X 1/2"

CONCRETE ANCHOR BLOCKS FOR VERTICAL BENDS

NOT TO SCALE

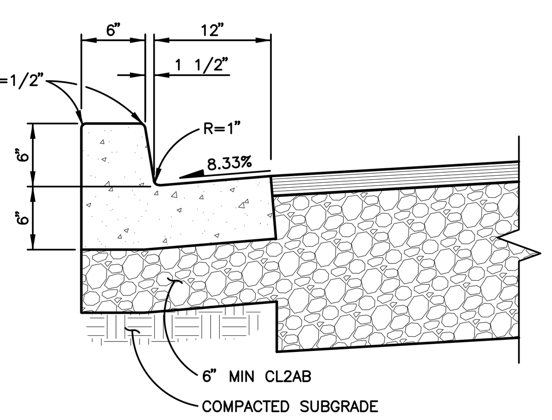

TYPE ⟨3⟩ CURB AND GUTTER

NOT TO SCALE

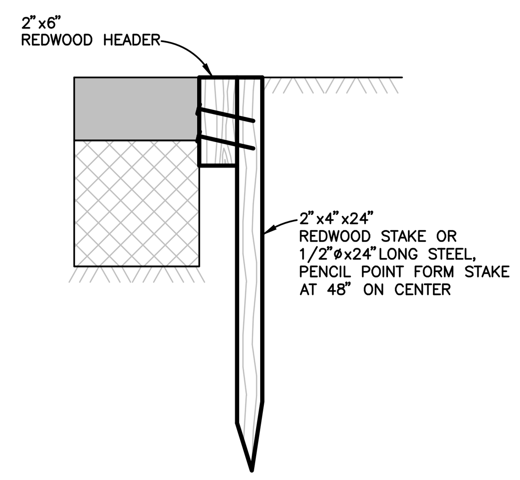

REDWOOD HEADER

NOT TO SCALE

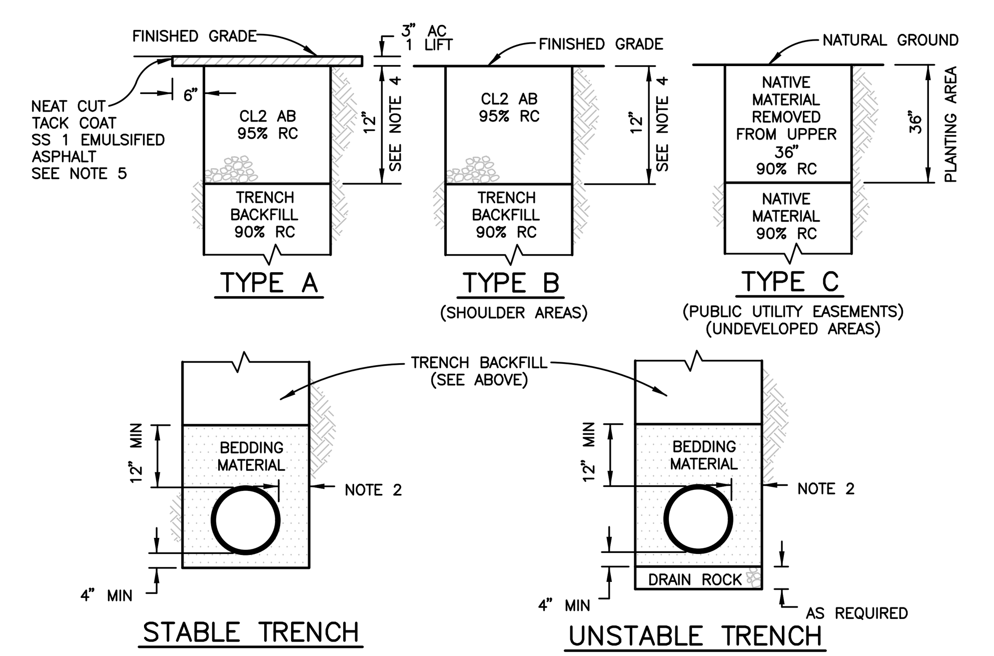

NOTES

1. **MATERIAL SPECIFICATIONS:**

   DRAIN ROCK SHALL BE EITHER OF THE NOMINAL SIZES DESIGNATED AS 1 1/2" BY 3/4" OR 2 1/2" BY 1 1/2".

   PIPE BEDDING AND TRENCH BACKFILL MATERIAL SHALL BE A WELL GRADED MATERIAL AND SHALL HAVE A MINIMUM SAND EQUIVALENT VALUE OF 30 AND SHALL CONFORM TO THE FOLLOWING GRADINGS:

	PERCENT PASSING					
	3"	3/4"	3/8"	NO. 4	NO. 30	NO. 200
PIPE BEDDING	–	90–100	65–100	30–100	–	0–5
TRENCH BACKFILL	100	100	–	40–100	10–100	–

   IN ADDITION, WHEN TESTED WITH THE FOLLOWING SERIES OF SIEVES, NO MORE THAN 25% OF THE MATERIAL WILL BE RETAINED BETWEEN ANY ADJACENT SIEVES: 3", 2 1/2", 2", 1 1/2", 1", 3/4", 1/2", 3/8", NO. 4, NO. 8, NO. 16, NO. 30, NO. 50, NO. 100, AND NO. 200.

   AGGREGATE BASE SHALL BE CLASS 2 AND SHALL CONFORM TO THE PROVISIONS OF SECTION 26, "AGGREGATE BASE", OF THE CALTRANS STANDARD SPECIFICATIONS, LATEST EDITION

   NATIVE MATERIAL SHALL NOT CONTAIN ROCKS LARGER THAN 3" IN LEAST DIMENSION.

2. PIPE DIAMETER 18" OR LESS: 6" MIN, 9" MAX PIPE DIAMETER GREATER THAN 18": 9" MIN, 12" MAX.
3. RELATIVE COMPACTION DESIGNATED RC.
4. THE STREET STRUCTURAL SECTION SHALL BE 3" AC ON 12" AB OR MATCH EXISTING PAVEMENT, WHICHEVER IS THICKER OR AS SPECIFIED ON PLANS.
5. NEATLY CUT PAVEMENT SIX INCHES FROM EDGE OF TRENCH AFTER TRENCH IS BACKFILLED.

TRENCH BACKFILL AND PIPE BEDDING

NOT TO SCALE

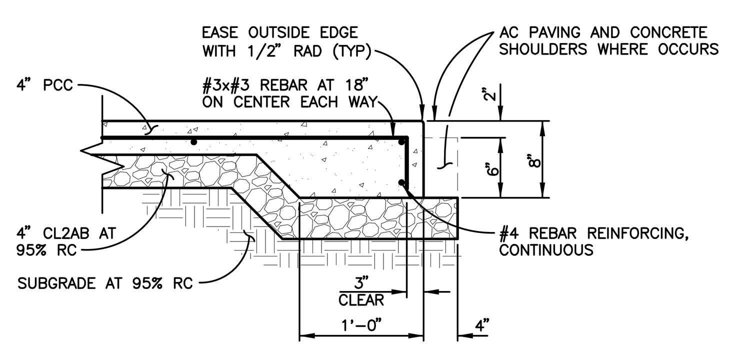

CONCRETE PAVING EDGE

NOT TO SCALE

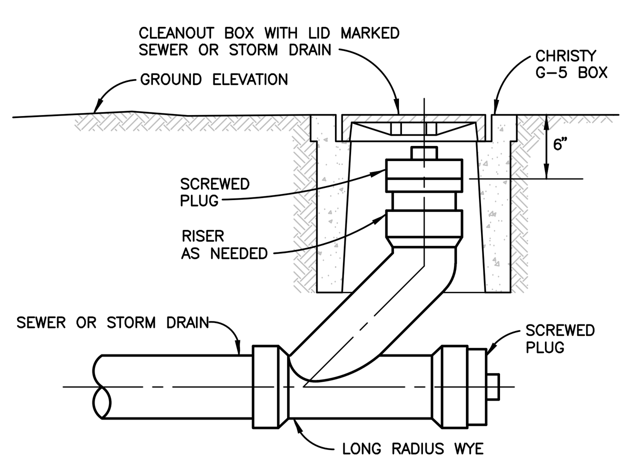

SSCO/SDCO

NOT TO SCALE

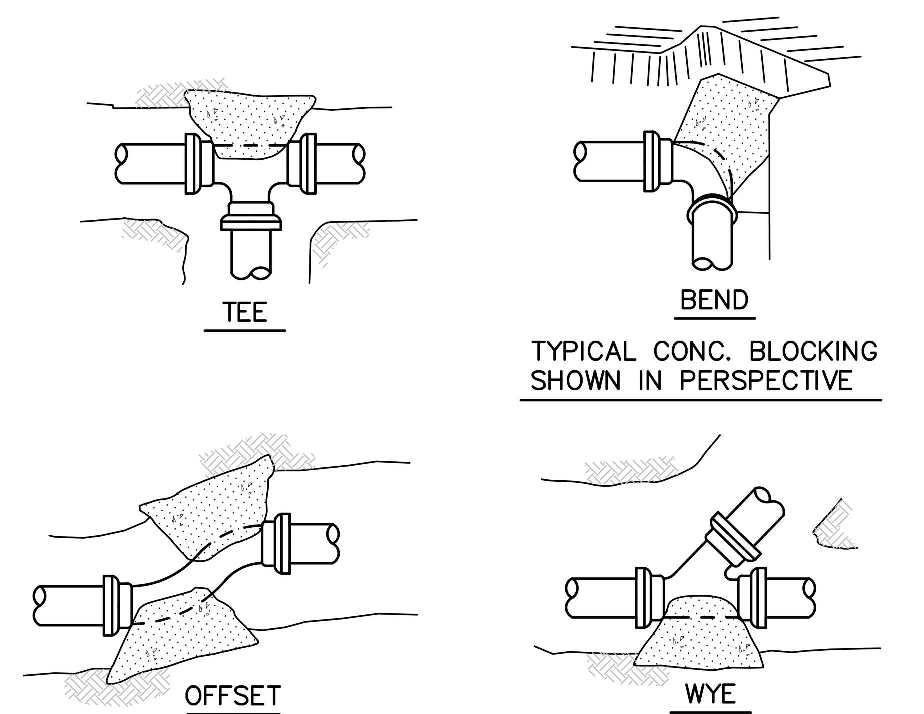

TYPICAL CONC. BLOCKING SHOWN IN PERSPECTIVE

MIN REQUIRED BEARING AREA IN SF FOR 200 PSI TEST PRESSURE						
PIPE SIZE	SOIL BEARING CAPACITY	HARNESS BLOCKS *	TEES & DEAD ENDS	90° BENDS	45° BENDS	22 1/2° BENDS
6"	1500	6	6	9	5	3
8"	1500	11	11	15	8	5
10"	1500	18	18	24	13	8
12"	1500	24	24	33	18	9
14"	1500	33	33	45	24	12

* BEARING AREA BELOW BOTTOM OF TRENCH AGAINST UNDISTURBED GROUND.

NOTES

1. SAFE BEARING LOAD OF SOIL FOR HORIZONTAL THRUST SHALL NOT BE EXCEEDED.
2. CONCRETE BLOCKING, CAST-IN-PLACE, TO EXTEND FROM BELLS OF FITTINGS TO UNDISTURBED SOIL AND ENTIRE BEARING AREA MUST BE AGAINST UNDISTURBED SOIL.
3. IN USING THE THRUST BLOCKING TABLE, ASSUME 1500 P.S.F. BEARING CAPACITY UNLESS OTHERWISE SHOWN ON THE PLANS. THE DESIGN ENGINEER SHALL SPECIFY THRUST BLOCKING REQUIREMENTS FOR ALL OTHER SOIL BEARING CONDITIONS.
4. FOR PLUGGED LEG(S) OF TEE OR CROSS, USE HARNESS TYPE BLOCKING AND CONCRETE BLOCKING INDICATED IN TABLE.

CONCRETE THRUST BLOCKING

NOT TO SCALE

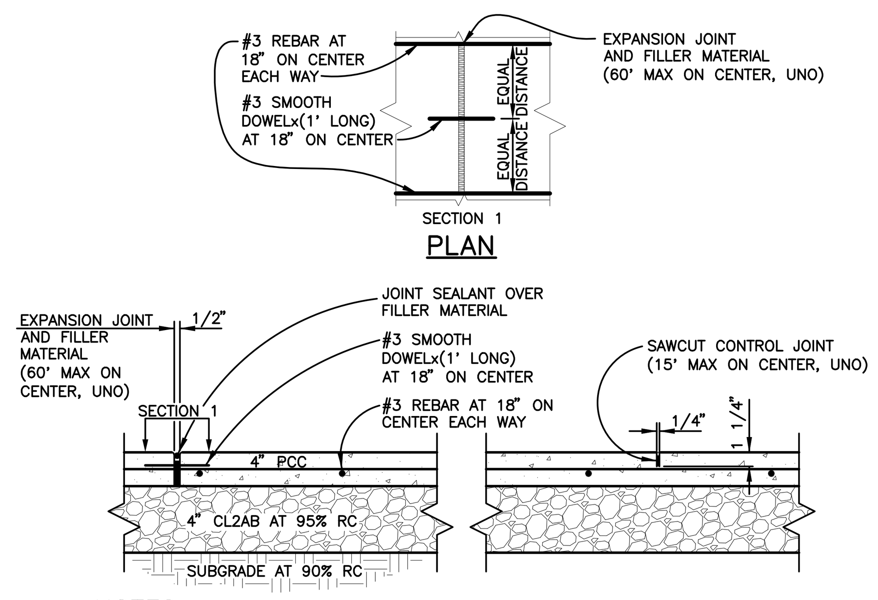

NOTES

1. SCORE MARKS SHALL BE THE SAME WIDTH OF THE SIDEWALK. SCORE MARKS FOR SIDEWALKS WIDER THAN 6' SHALL HAVE A LONGITUDINAL SCORE MARK ALONG THE CENTER OF THE WALK.
2. CONCRETE WALK SHOULD BE DOWELED INTO PROPOSED BUILDING FOUNDATIONS ADJACENT TO DOORWAYS AND INTO CURBS WITH #3 SMOOTH DOWEL @ 18" O.C.
3. EXPANSION JOINTS SHALL BE PLACED IN THE SIDEWALK AT THE SAME LOCATION AS THOSE IN THE CURB AND GUTTER WHEN THE SIDEWALK IS ADJACENT TO THE CURB.

PEDESTRIAN PCC WALK SECTION AND JOINT

NOT TO SCALE

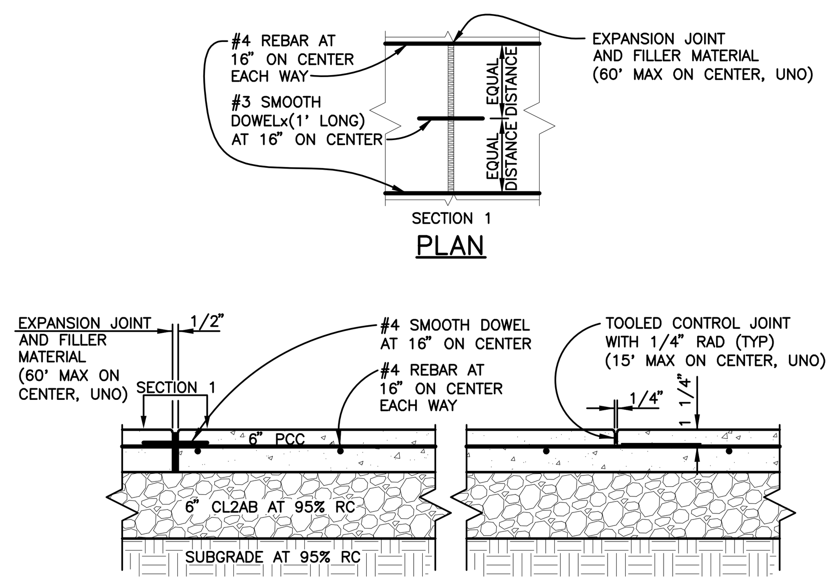

NOTES

1. SCORE MARKS SHALL BE THE SAME WIDTH OF THE SIDEWALK. SCORE MARKS FOR SIDEWALKS WIDER THAN 6' SHALL HAVE A LONGITUDINAL SCORE MARK ALONG THE CENTER OF THE WALK.
2. EXPANSION JOINTS SHALL BE PLACED IN THE SIDEWALK AT THE SAME LOCATION AS THOSE IN THE CURB AND GUTTER WHEN THE SIDEWALK IS ADJACENT TO THE CURB.

VEHICULAR PCC SECTION AND JOINT

NOT TO SCALE

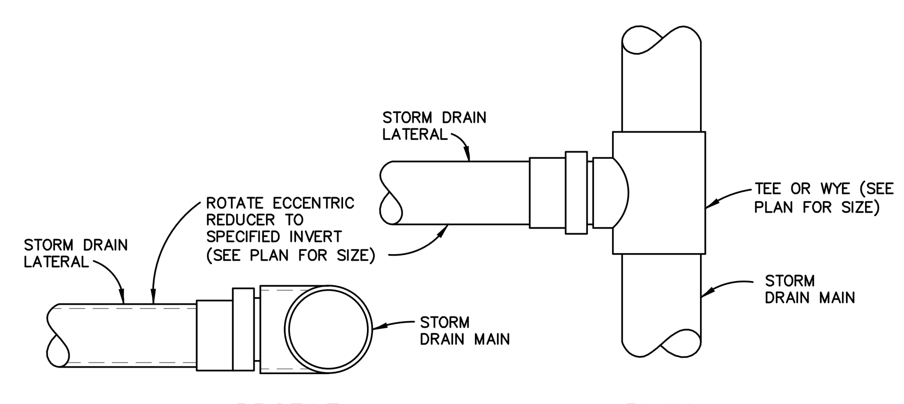

BLIND CONNECTION (NEW SD TO NEW SD)

NOT TO SCALE

TAB: C-501 DETAILS

08-29-23 Patheal \2701\dwg\2701 17\2701.17 DETAIL.dwg

AGENCY APPROVAL STAMP:

IDENTIFICATION STAMP
DIV. OF THE STATE ARCHITECT
APP: 01-120890 INC:
REVIEWED FOR
SS ☑ FLS ☑ ACS ☑
DATE: 10/25/2023

TLCDARCHITECTURE
520 Third St. #250
Santa Rosa, CA 95401
o: 707.525.5600
f: 707.525.5616
tlcd.com

CONSULTANT:

Brelje & Race
CONSULTING ENGINEERS
475 Aviation Boulevard, Suite 120
Santa Rosa, CA 95403
v: 707-576-1322
f: 707-576-0469
www.brce.com

STAMP:

REVISIONS:

Number	Date	Description

NAPA VALLEY COLLEGE WINE EDUCATION CENTER

2277 NAPA VALLEJO HWY
NAPA, CA 94558

NAPA VALLEY COLLEGE

DSA APPLICATION NUMBER: 01-120890
TLCD PROJECT NUMBER: 21062/2701.17
DATE: 8/30/2023
DRAWN BY: PIT
CHECKED BY: RG

DETAILS

C-501

© THESE DRAWINGS ARE INSTRUMENTS OF SERVICE AND ARE THE SOLE PROPERTY OF TLCD ARCHITECTURE; ANY USE WITHOUT WRITTEN CONSENT IS PROHIBITED.

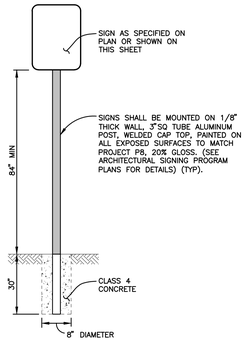

TYPICAL SIGN POST

NOT TO SCALE

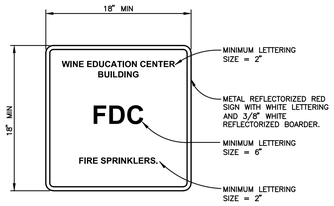

"FDC" SIGN

NOT TO SCALE

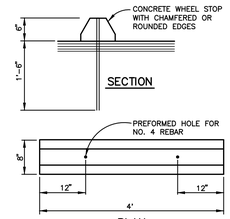

WHEEL STOP

NOT TO SCALE

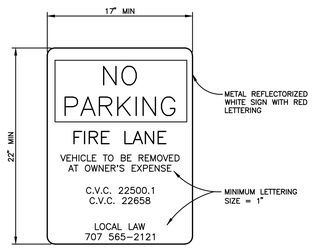

"NO PARKING" FIRE LANE SIGN

NOT TO SCALE

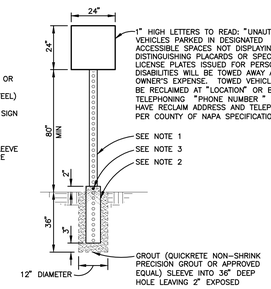

NOTES

1. 1 3/4" SQUARE TELESPAR OR QUICK PUNCH SIGN POST (14-GUAGE GALVANIZED STEEL)
2. 2" SQUARE QUICK PUNCH SIGN POST SLEEVE (12-GUAGE GALVANIZED STEEL)
3. BOLT SIGN POST TO 2" SLEEVE WITH GALVANIZED HARDWARE SUPPLIED FROM POST MANUFACTURE.

UNAUTHORIZED VEHICLES "TOW AWAY" SIGN

NOT TO SCALE

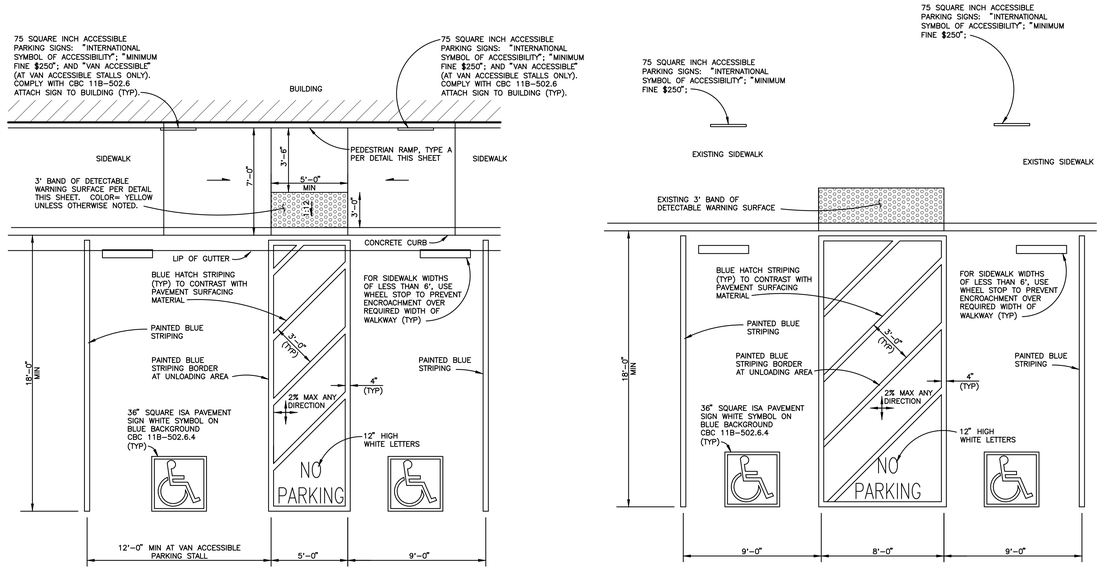

TYPE 1 ACCESSIBLE PARKING STALLS

SCALE: 1/4"=1'

TYPE 2 ACCESSIBLE PARKING STALLS

SCALE: 1/4"=1'

R100B (CA) SIGN

R99C (CA) SIGN

R99B (CA) SIGN

R7-8b SIGN

ACCESSIBLE PARKING SIGNS

NOT TO SCALE

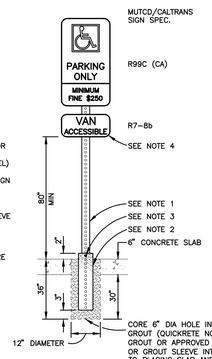

NOTES

1. 1 3/4" SQUARE TELESPAR OR QUICK PUNCH SIGN POST (14-GUAGE GALVANIZED STEEL)
2. 2" SQUARE QUICK PUNCH SIGN POST SLEEVE (12-GUAGE GALVANIZED STEEL)
3. BOLT SIGN POST TO 2" SLEEVE WITH GALVANIZED HARDWARE SUPPLIED FROM POST MANUFACTURE.
4. VAN ACCESSIBLE SIGN, WHERE NOTED ON PLAN.

ACCESSIBLE PARKING SIGN

NOT TO SCALE

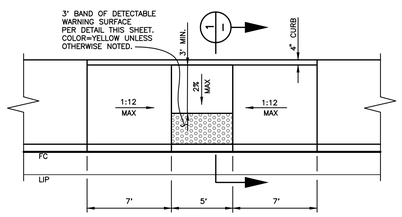

PLAN

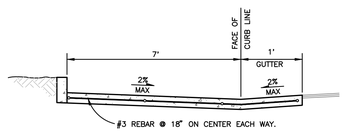

SECTION 1

NOTES

1. THE BOTTOM OF THE RAMP SHALL BE FLUSH WITH THE GUTTER. NO LIP SHALL BE USED.
2. SIDEWALK AND RAMP THICKNESS SHALL BE 4".
3. 8.33% SLOPE EQUALS 1 IN 12.

PEDESTRIAN RAMP TYPE A

NOT TO SCALE

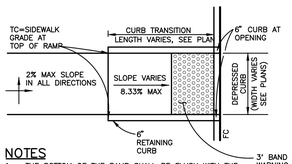

NOTES

1. THE BOTTOM OF THE RAMP SHALL BE FLUSH WITH THE GUTTER. NO LIP SHALL BE USED.
2. SIDEWALK AND RAMP THICKNESS SHALL BE 4".
3. 8.33% SLOPE EQUALS 1 IN 12.
4. DESIGN SHALL CONFORM TO THESE REQUIREMENTS, EXCEPT AS OTHERWISE APPROVED BY ENGINEER.

PEDESTRIAN RAMP TYPE B

NOT TO SCALE

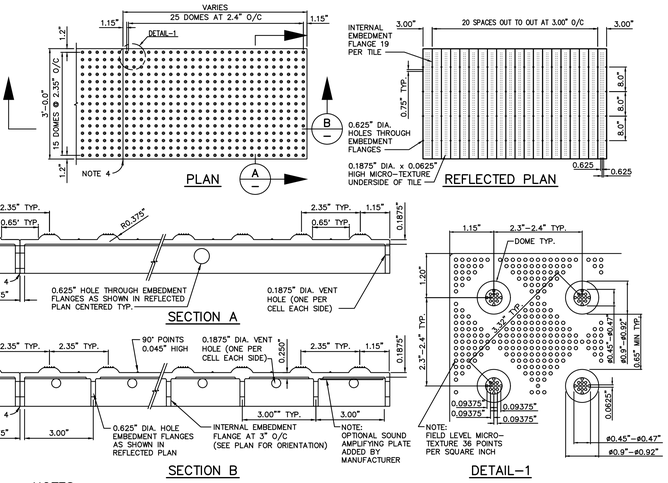

NOTES

1. DETAIL FOR 36"x60" SHOWN. DETAIL FOR OTHER SIZE TILES SIMILAR.
2. TILE COLOR TO BE YELLOW.
3. TILES TO BE PLACED FULL WIDTH OF RAMP, EXCLUDING FLARES, AND A MINIMUM LENGTH OF 3FT IN THE DIRECTION OF TRAVEL.
4. WHEN PLACING SEPARATE TILES TOGETHER, ADJACENT TILES SHALL MAINTAIN TRUNCATED DOMES CENTER-TO-CENTER AND BASE-TO-BASE SPACING BETWEEN THE SQUARE GRIDS, AS WELL AS LINEAL ALIGNMENT.

EMBEDDED DETECTABLE WARNING SURFACE

NOT TO SCALE

TAB: C-502 DETAILS

09-28-23 gleason \2701\dwg\2701 17\2701.17 DETAIL.dwg

AGENCY APPROVAL STAMP:

IDENTIFICATION STAMP
DIV. OF THE STATE ARCHITECT
APP: 01-120890 INC:
REVIEWED FOR
SS ☑ FLS ☑ ACS ☑
DATE: 10/25/2023

TLCDARCHITECTURE
520 Third St. #250
Santa Rosa, CA 95401
o: 707.525.5600
f: 707.525.5616
tlcd.com

CONSULTANT:

Brelje & Race
CONSULTING ENGINEERS
475 Aviation Boulevard, Suite 120
Santa Rosa, CA 95403
v: 707-576-1322
f: 707-576-0469
www.brce.com

STAMP:

REGISTERED PROFESSIONAL ENGINEER
R. C. BARTOLI
No. 40512
Exp. 3-31-25
CIVIL
STATE OF CALIFORNIA
10/26/23

REVISIONS:

Number	Date	Description

NAPA VALLEY COLLEGE WINE EDUCATION CENTER

2277 NAPA VALLEJO HWY
NAPA, CA 94558

NAPA VALLEY COLLEGE

DSA APPLICATION NUMBER
01-120890

TLCD PROJECT NUMBER
2106/2701.17

DATE:
8/30/2023

DRAWN BY:
PIT

CHECKED BY:
RG

DETAILS

C-502

© THESE DRAWINGS AND INSTRUMENTS OF SERVICE ARE AND THE SOLE PROPERTY OF TLCD ARCHITECTURE. ANY USE WITHOUT WRITTEN CONSENT IS PROHIBITED.

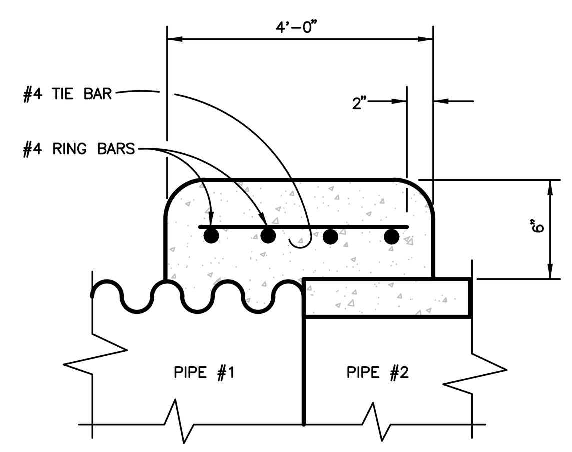

CONCRETE COLLAR
NOT TO SCALE

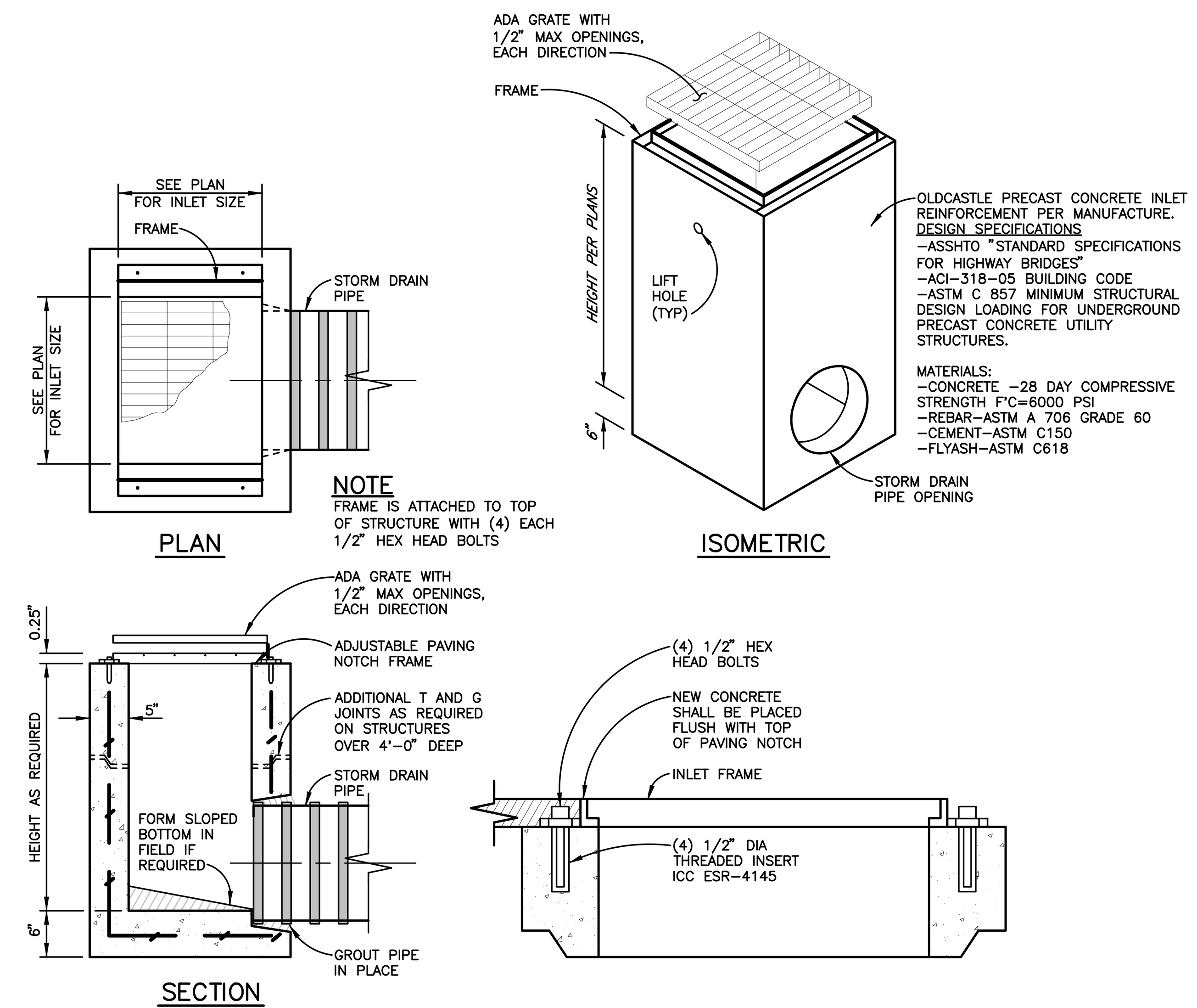

SDDI PAVING NOTCH
NOT TO SCALE

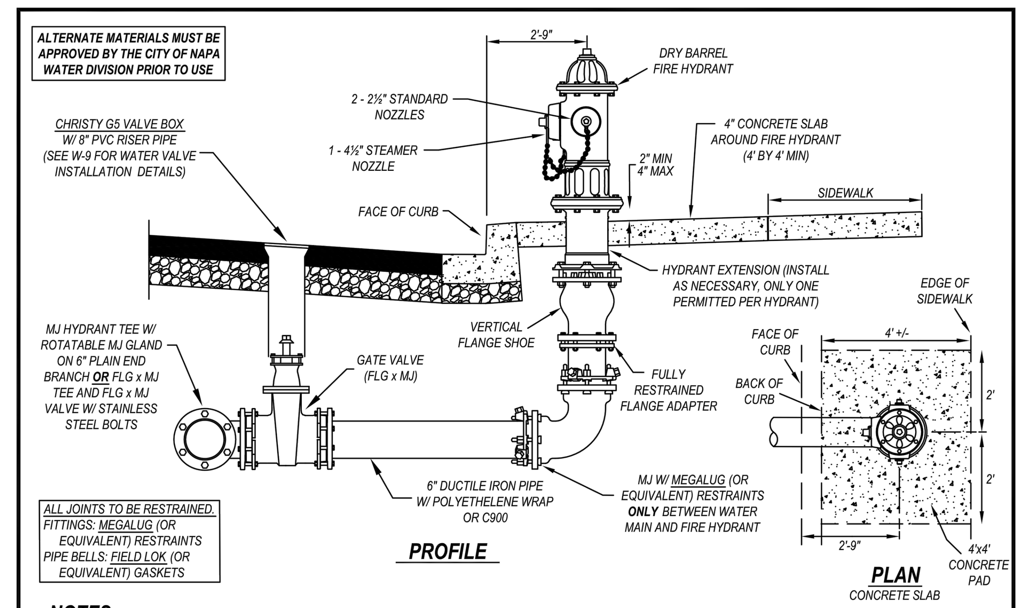

NOTES

1. APPROVED HYDRANTS: MUELLER "SUPER CENTURION", AND AMERICAN-DARLING "B-62-B". **NO SUBSTITUTES WILL BE ACCEPTED.**
2. HYDRANTS SHALL CONFORM TO AWWA STANDARD C 502-85. HYDRANTS SHALL HAVE ONE 4-1/2" OUTLET AND TWO 2-1/2" OUTLETS WITH CHAINED CAPS. MAIN VALVE SIZE SHALL BE 5-1/4". HYDRANTS INSTALLED ON 12" DIAMETER OR LARGER WATER MAINS SHALL BE 8-IN IN DIAMETER.
3. OPERATION: AWWA STANDARD PENTAGON NUT, OPEN LEFT WITH A MAXIMUM 60 FT-LB OPERATING TORQUE.
4. BURY DEPTH: 36" TYPICAL.
5. PUBLIC FIRE HYDRANTS SHALL BE POWDER COATED SILVER COLOR FINISH. FIRE HYDRANTS ON A PRIVATE FIRE SYSTEM SHALL BE PAINTED WITH A PRIME COAT PLUS "OSHA YELLOW" COLOR FINISH.
6. WHERE SIDEWALK IS ADJACENT TO CURB, EXTEND SIDEWALK AND RIGHT-OF-WAY TO PROVIDE A MINIMUM 4 FEET CLEARANCE BEHIND FIRE HYDRANT PER ADA REQUIREMENTS.
7. A 6" VERTICAL CURB IS REQUIRED FOR A MINIMUM OF 10' ON EACH SIDE OF HYDRANT.
8. INSTALL 8 MIL POLYETHYLENE WRAP ON LATERAL, JOINTS, AND VERTICAL RISE.
9. VERTICAL OFFSETS BETWEEN MAIN AND HYDRANT SHALL BE ACHIEVED WITH 45° BENDS W/ RESTRAINED JOINTS.
10. INSTALL PAVEMENT MARKER(S) IN PUBLIC STREET FOR ALL NEW AND RELOCATED FIRE HYDRANTS (SEE W-21).
11. FIRE HYDRANTS THAT ARE NOT IN SERVICE SHALL BE COMPLETELY COVERED.
12. PUBLIC FIRE HYDRANTS THAT ARE IN SERVICE SHALL BE OPERATED BY WATER DIVISION OR FIRE DEPARTMENT STAFF ONLY.
13. WATER USE THROUGH ANY FIRE HYDRANT SHALL BE LIMITED TO WATER SYSTEM MAINTENANCE AND FIRE PREVENTION USES ONLY. FIRE HYDRANTS MAY BE USED FOR CONSTRUCTION WATER PURPOSES WITH THE USE OF A HYDRANT METER OBTAINED FROM THE CITY **AND** IF THE LOCATION IS APPROVED BY THE CITY OF NAPA WATER DIVISION.
14. NO TREES SHALL BE PLANTED WITHIN 10', OR LARGE SHRUBS WITHIN 5', OF FIRE HYDRANTS.

CITY OF NAPA		PUBLIC WORKS DEPARTMENT
TITLE: FIRE HYDRANT	DRAWN BY: DCF	CHECKED BY: MJH
	DATE: 09/2019	APPROVED BY: MJH
	SCALE: NTS	DRAWING NO. W-8
	FIELD NOTES:	

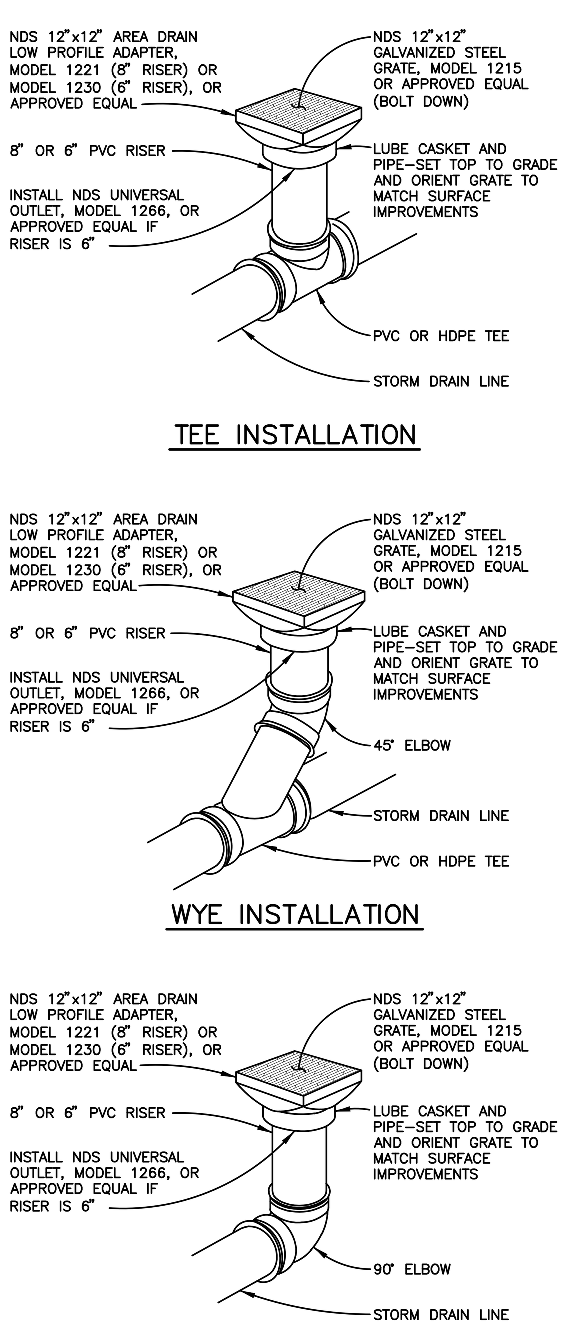

SDDI-NDS
NOT TO SCALE

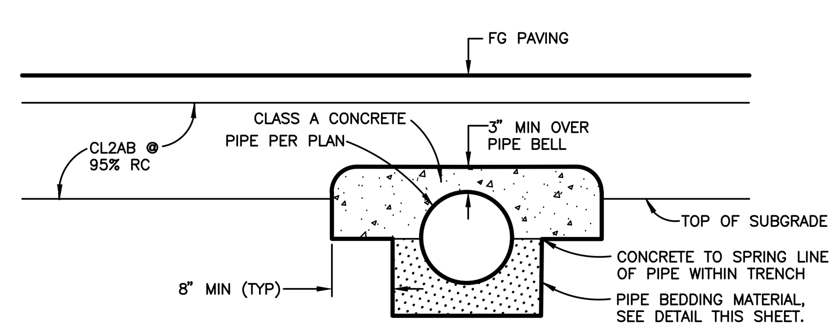

TRENCH SECTION FOR STORM DRAIN WITHIN BASE ROCK SECTION
NOT TO SCALE

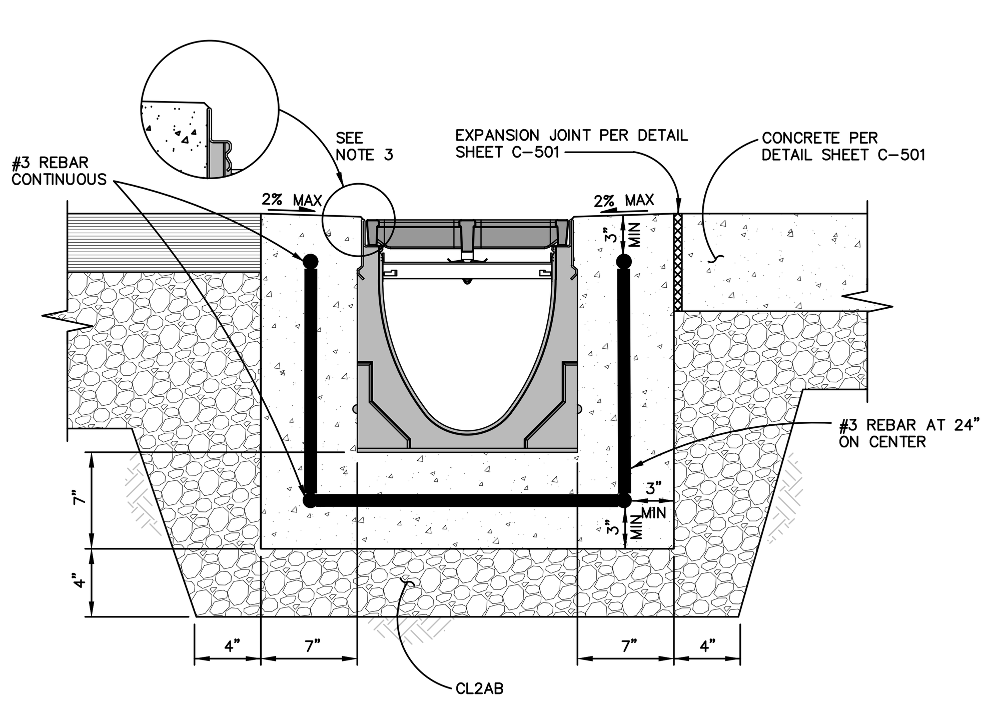

NOTES
1. IT IS NECESSARY TO ENSURE MINIMUM DIMENSIONS ARE ACHIEVED.
2. MINIMUM CONCRETE STRENGTH OF 4,000 PSI IS RECOMMENDED. CONCRETE SHOULD BE VIBRATED TO ELIMINATE AIR POCKETS.
3. THE FINISHED LEVEL OF THE CONCRETE SURROUND MUST BE APPROXIMATE 1/8" ABOVE THE TOP OF THE CHANNEL EDGE.
4. REFER TO ACO'S LATEST INSTALLATION INSTRUCTIONS FOR FURTHER DETAILS.

TRENCH DRAIN (KS100-KLASSIKDRAIN)
NOT TO SCALE

Central Precast

Title: 30"x30" TO 24"ø TRANSITION SLAB	Date: 01/00/02	Dwg. No. 3030-TS24
	Rev.	Page No. 1

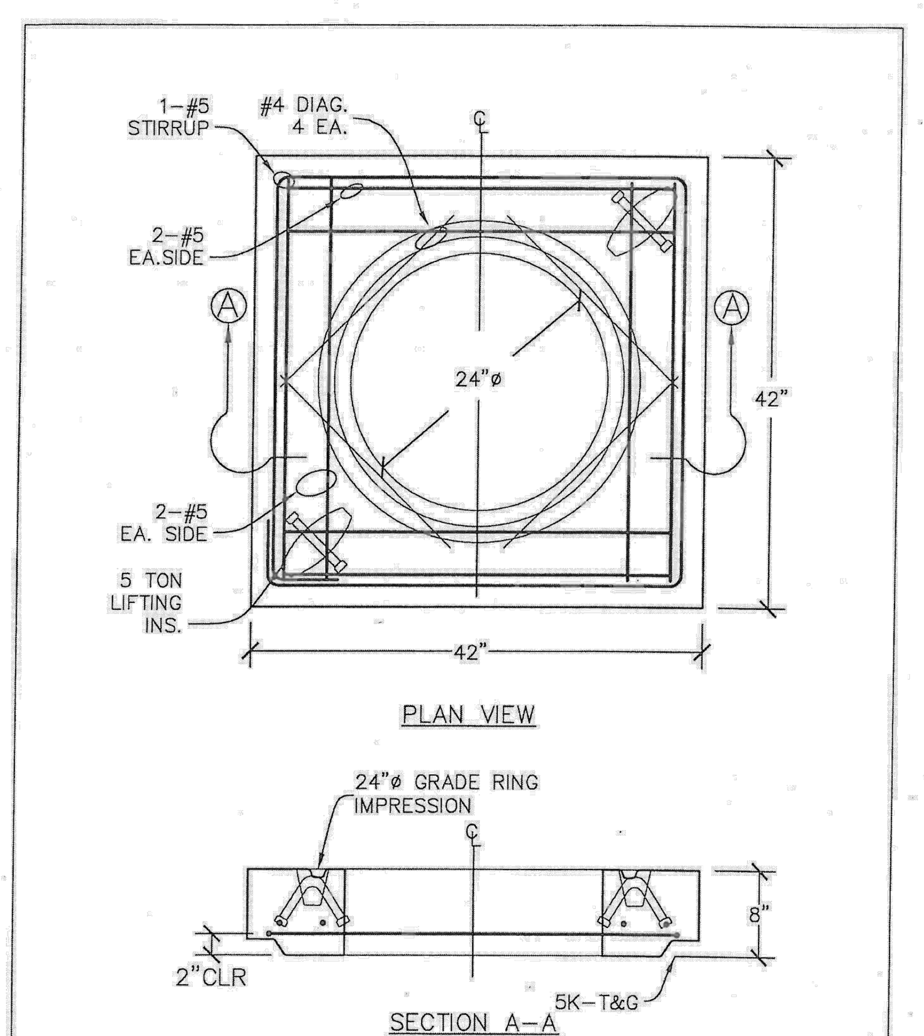

NOTES:
WEIGHT=900 LBS.

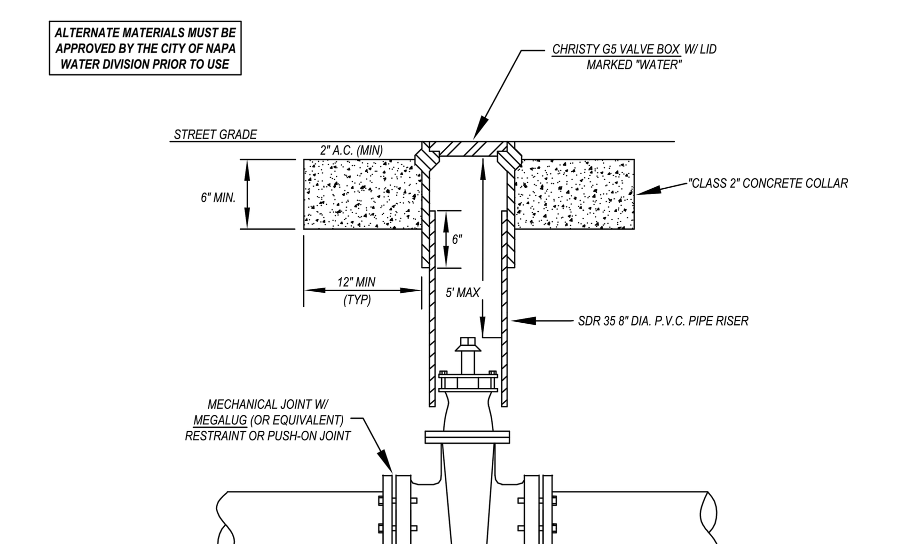

NOTES

1. BUTTERFLY VALVES SHALL BE INSTALLED FOR 12" AND LARGER PIPES. VALVE NUTS SHALL BE PLACED ON THE SIDE OF THE MAIN CLOSEST TO THE NEAREST CURB.
2. VALVE RING SHALL BE SET TO GRADE PRIOR TO PLACING FINISHED PAVEMENT.
3. THE TWO (2) INCH SQUARE OPERATING NUT ON ALL VALVES SHALL BE INSTALLED AT A MAXIMUM OF 5-FEET IN DEPTH MEASURED FROM THE TOP OF THE OPERATING NUT TO FINISHED GRADE. ALL OPERATING NUTS INSTALLED AT A DEPTH GREATER THAN 5-FEET SHALL INCLUDE A VALVE EXTENSION TO RAISE THE OPERATING NUT TO 24-INCHES FROM FINISHED GRADE.
4. VALVE EXTENSIONS (IF REQUIRED) SHALL BE ROUND OR SQUARE 1.5-INCH DIAMETER STEEL ROD, WELDED CONSTRUCTION, AND COATED WITH TOP CENTERING RING AND AWWA 2" OPERATING NUTS TOP AND BOTTOM (PIPELINE PRODUCTS SX-900 OR SIMILAR). SOCKET END SHALL BE DRILLED AND TAPPED WITH TWO (2) 1/4" SET SCREWS INSTALLED ON OPPOSITE SIDES. OPERATING NUT SHALL BE DRILLED WITH RECESSES TO ACCEPT THE TWO (2) 1/4" SET SCREWS. SET SCREWS SHALL BE SECURELY FASTENED TO THE OPERATING NUT.
5. WATER VALVES SHALL BE OPERATED BY WATER DIVISION PERSONNEL ONLY.

CITY OF NAPA		PUBLIC WORKS DEPARTMENT
TITLE: VALVES	DRAWN BY: DCF	CHECKED BY: MJH
	DATE: 07/2017	APPROVED BY: MJH
	SCALE: NTS	DRAWING NO. W-9
	FIELD NOTES:	

AGENCY APPROVAL STAMP:

IDENTIFICATION STAMP
DIV. OF THE STATE ARCHITECT
APP: 01-120890 INC:
REVIEWED FOR
SS ☑ FLS ☑ ACS ☑
DATE: 10/25/2023

TLCDARCHITECTURE
520 Third St. #250
Santa Rosa, CA 95401
o: 707.525.5600
f: 707.525.5616
tlcd.com

CONSULTANT:

Brelje & Race
CONSULTING ENGINEERS
475 Aviation Boulevard, Suite 120
Santa Rosa, CA 95403
v: 707-576-1322
f: 707-576-0469
www.brce.com

STAMP:

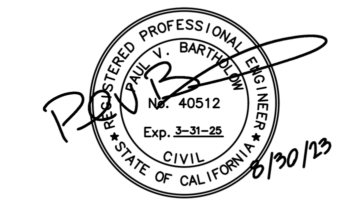

REVISIONS:

Number	Date	Description

NAPA VALLEY COLLEGE WINE EDUCATION CENTER
2277 NAPA VALLEJO HWY
NAPA, CA 94558

NAPA VALLEY COLLEGE

DSA APPLICATION NUMBER
01-120890

TLCD PROJECT NUMBER:
21062/2701.17

DATE:
8/30/2023

DRAWN BY:
PIT

CHECKED BY:
RG

DETAILS

C-503

© THESE DRAWINGS ARE INSTRUMENTS OF SERVICE AND ARE THE SOLE PROPERTY OF TLCD ARCHITECTURE; ANY USE WITHOUT WRITTEN CONSENT IS PROHIBITED.

TREE PROTECTION NOTES

1. REFER TO SPECIFICATIONS FOR PLANT PROTECTION, AND TREE REPLACEMENT REQUIREMENTS.
2. THE CONTRACTOR TO MEET WITH THE PROJECT ARBORIST BEFORE BEGINNING WORK TO DISCUSS WORK PROCEDURES AND TREE PROTECTION.
3. EACH TREE IDENTIFIED FOR PRESERVATION SHALL RECEIVE SUPPLEMENTAL IRRIGATION PRIOR TO AND DURING THE DEMOLITION AND CONSTRUCTION PROCESS.
4. ESTABLISH A TREE PROTECTION ZONE (TPZ) FOR EACH TREE IDENTIFIED FOR PRESERVATION PRIOR BEGINNING ANY DEMOLITION OR CONSTRUCTION WORK. ANY MODIFICATIONS TO THE TPZ MUST BE APPROVED AND MONITORED BY THE PROJECT ARBORIST.
5. PROHIBIT WORK WITHIN THE TREE PROTECTION ZONE. INCLUDING: GRADING AND STORAGE OF SOIL, CONSTRUCTION ACCESS ROUTES, TRAVEL AND PARKING OF ALL VEHICLES AND CONSTRUCTION EQUIPMENT, GRADE CHANGES AND EXCAVATIONS, MATERIAL STORAGE AND STAGING, FUEL AND MIXING AREAS, WASHOUT AREAS FOR CONCRETE AND OTHER MATERIALS.
6. VERIFY THAT ANY HERBICIDES PLACED UNDER PAVING MATERIALS ARE SAFE FOR USE AROUND TREES AND LABELED FOR THAT USE.
7. DO NOT LIME SOIL WITHIN 30' OF ANY TREE DESIGNATED FOR PRESERVATION. LIME IS TOXIC TO TREE ROOTS.
8. NO IRRIGATION TRENCHING SHALL OCCUR WITHIN THE TPZ, SEE IRRIGATION SPECIFICATION.
9. FENCE ALL TREES TO BE RETAINED TO COMPLETELY ENCLOSE THE TREE PROTECTION ZONE PRIOR TO DEMOLITION, GRUBBING, OR GRADING. FENCES SHALL BE 6' CHAIN LINK OR EQUIVALENT AS APPROVED. WHERE POSSIBLE, FENCE GROUP OF TREES TOGETHER. FENCES ARE TO REMAIN IN PLACE UNTIL ALL GRADING AND CONSTRUCTION IS COMPLETED.
10. PROTECT ALL TRUNKS AND LIMBS EXPOSED TO POTENTIAL DAMAGE BY CONSTRUCTION ACTIVITIES WITH TIMBERS SECURED TO TREES WITH METAL STRAPS AS APPROVED BY THE PROJECT ARBORIST.
11. PRUNE TREES TO BE PRESERVED TO CLEAN THE CROWN AND TO PROVIDE CONSTRUCTION CLEARANCE. ALL PRUNING SHALL BE COMPLETED BY A CERTIFIED ARBORIST OR TREE WORKER AND ADHERE TO THE TREE PRUNING GUIDELINES OF THE INTERNATIONAL SOCIETY OF ARBORICULTURE. BRUSH SHALL BE CHIPPED AND SPREAD BENEATH THE TREES WITHIN THE TREE PROTECTION ZONE.
12. ENSURE THAT ANY ROOT PRUNING REQUIRED FOR CONSTRUCTION PURPOSES IS SUPERVISED BY AND RECEIVES THE APPROVAL OF THE PROJECT ARBORIST.
13. APPLY AND MAINTAIN 3" OF WOOD CHIP MULCH WITHIN THE TREE PROTECTION ZONE. KEEP THE MULCH 2' FROM THE BASE OF TREE TRUNKS.
14. EVALUATE ANY INJURY TO TREES THAT SHOULD OCCUR DURING CONSTRUCTION. NOTIFY THE PROJECT ARBORIST SO THAT APPROPRIATE TREATMENTS CAN BE APPLIED.
15. REQUIRE THAT ANY TREE PRUNING NEEDED FOR CLEARANCE DURING CONSTRUCTION BE PERFORMED BY A CERTIFIED ARBORIST AND NOT BY CONSTRUCTION PERSONNEL.
16. AN I.S.A. CERTIFIED ARBORIST OR TREE WORKER SHALL BE PRESENT AT ALL TIMES DURING PRUNING. ALL PRUNING SHALL BE IN ACCORDANCE WITH THE TREE PRUNING GUIDELINES OF THE INTERNATIONAL SOCIETY OF ARBORICULTURE AND ADHERE TO THE MOST RECENT EDITION OF THE AMERICAN NATIONAL STANDARDS FOR TREE CARE OPERATIONS (Z133.1) AND TREE PRUNING (A300).

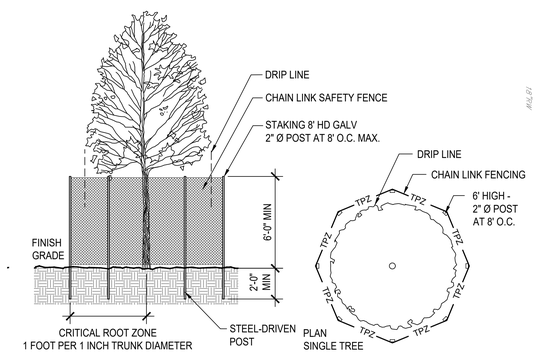

1 TREE PRESERVATION FENCING
SCALE: 1/4" = 1'-0"

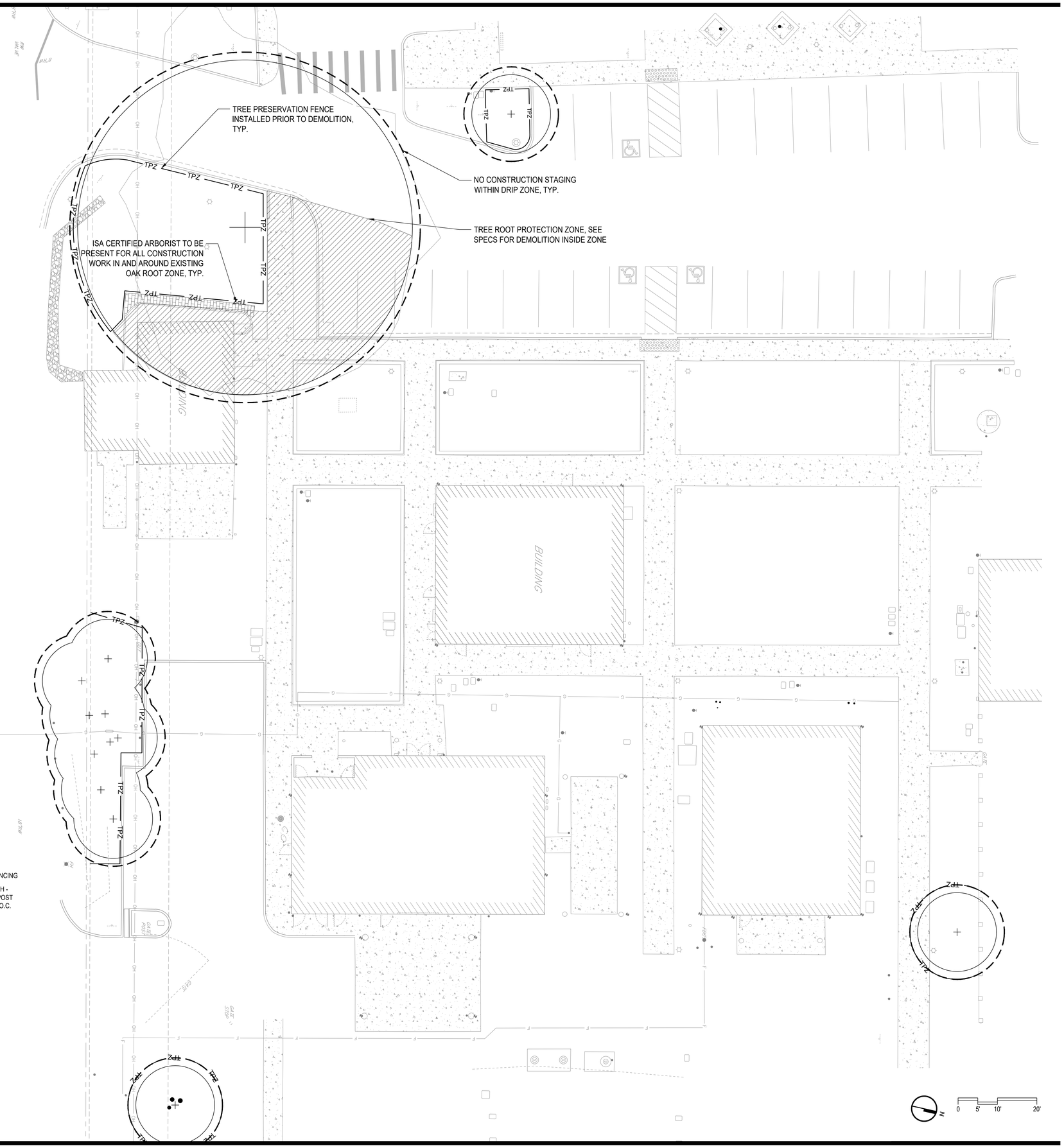

AGENCY APPROVAL STAMP:

IDENTIFICATION STAMP
DIV. OF THE STATE ARCHITECT
APP: 01-120890 INC:
REVIEWED FOR
SS ☑ FLS ☑ ACS ☑
DATE: 10/25/2023

TLCDARCHITECTURE
520 Third St. #250
Santa Rosa, CA 95401
o: 707.525.5600
f: 707.525.5616
tlcd.com

CONSULTANT:

rhaa
Landscape Architecture & Planning
225 Miller Avenue, Mill Valley, CA 94941
T 415 383 7900 rhaa.com

STAMP:

REVISIONS:

Number	Date	Description

NAPA VALLEY COLLEGE WINE EDUCATION CENTER

2277 NAPA VALLEJO HWY
NAPA, CA 94558

NAPA VALLEY COLLEGE

DSA APPLICATION NUMBER:
01-120890

TLCD PROJECT NUMBER:
21062.00

DATE:
08/30/2023

TREE PRESERVATION PLAN - PHASE 1

L-101

© THESE DRAWINGS ARE INSTRUMENTS OF SERVICE AND ARE THE SOLE PROPERTY OF TLCD ARCHITECTURE. ANY USE WITHOUT WRITTEN CONSENT IS PROHIBITED.

6/3/2022 10:51:11 AM

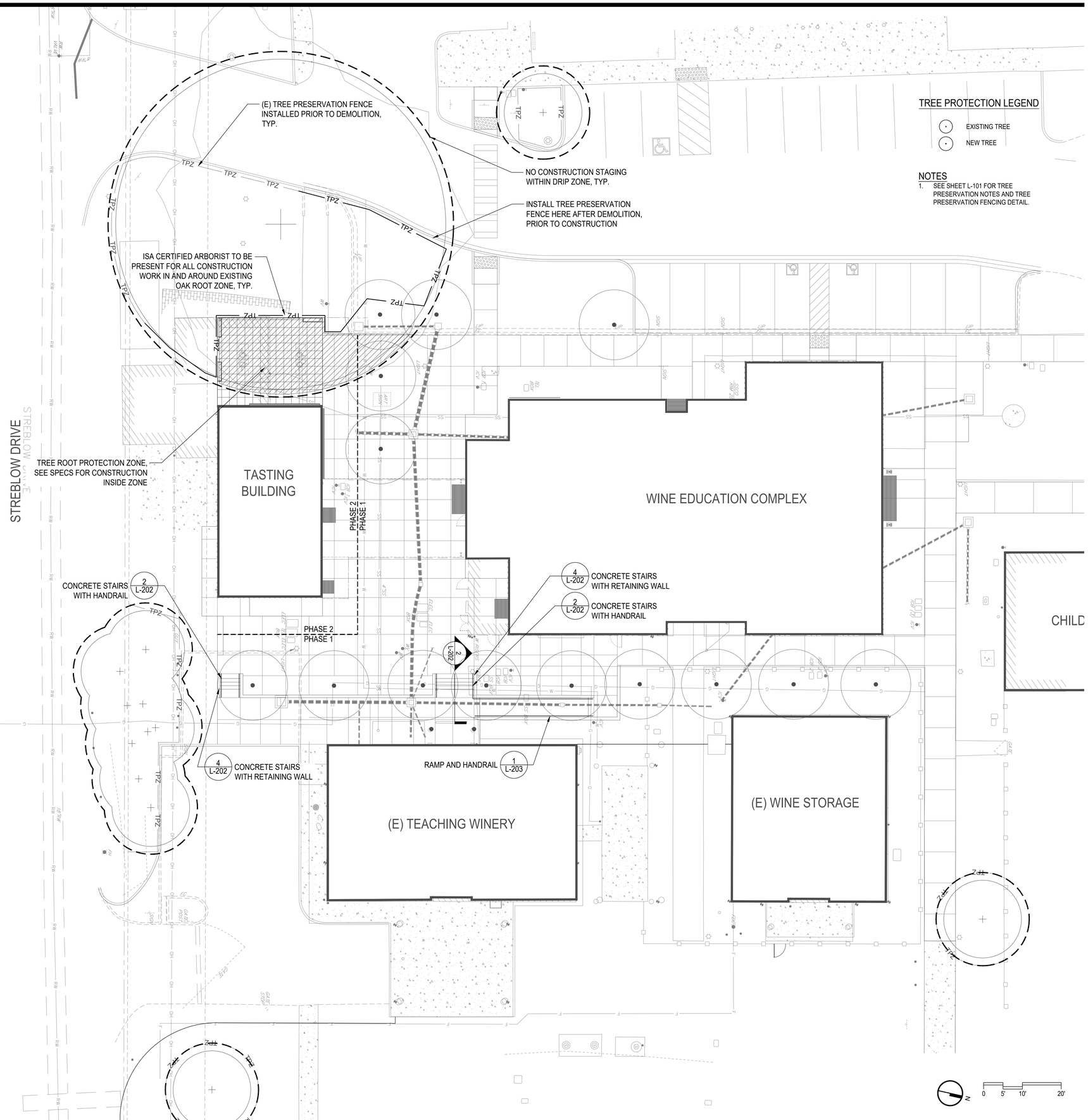

AGENCY APPROVAL STAMP:

IDENTIFICATION STAMP
DIV. OF THE STATE ARCHITECT
APP: 01-120890 INC:
REVIEWED FOR
SS ☑ FLS ☑ ACS ☑
DATE: 10/25/2023

TLCDARCHITECTURE
520 Third St. #250
Santa Rosa, CA 95401
o: 707.525.5600
f: 707.525.5616
tlcd.com

CONSULTANT:

rhaa
Landscape Architecture & Planning
225 Miller Avenue, Mill Valley, CA 94941
T 415 383 7900 rhaa.com

STAMP:

LICENSED LANDSCAPE ARCHITECT
No. 2422 Lindburg Lindsay
Signature
08/04/2024
Renewal Date
08/30/2023
Date
STATE OF CALIFORNIA

REVISIONS:

Number	Date	Description

NAPA VALLEY COLLEGE WINE EDUCATION CENTER

2277 NAPA VALLEJO HWY
NAPA, CA 94558

NAPA VALLEY COLLEGE

DSA APPLICATION NUMBER:
01-120890

TLCD PROJECT NUMBER:
21062.00

DATE:
08/30/2023

TREE PRESERVATION PLAN - PHASE 2

L-102

© THESE DRAWINGS ARE INSTRUMENTS OF SERVICE AND ARE THE SOLE PROPERTY OF TLCD ARCHITECTURE. ANY USE WITHOUT WRITTEN CONSENT IS PROHIBITED.

6/3/2022 10:51:11 AM

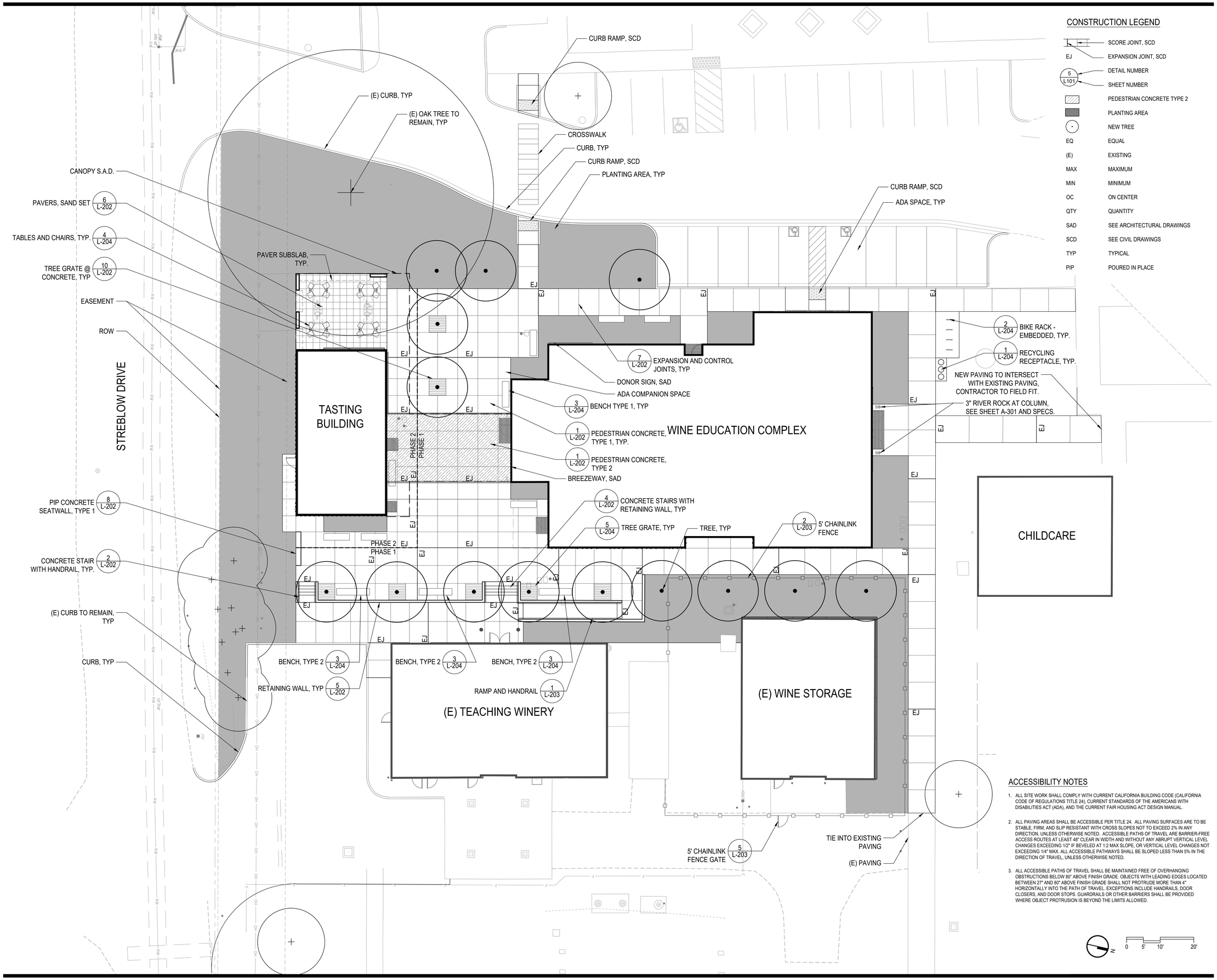

CONSTRUCTION LEGEND

	SCORE JOINT, SCD
EJ	EXPANSION JOINT, SCD
5 / L101	DETAIL NUMBER / SHEET NUMBER
	PEDESTRIAN CONCRETE TYPE 2
	PLANTING AREA
	NEW TREE
EQ	EQUAL
(E)	EXISTING
MAX	MAXIMUM
MIN	MINIMUM
OC	ON CENTER
QTY	QUANTITY
SAD	SEE ARCHITECTURAL DRAWINGS
SCD	SEE CIVIL DRAWINGS
TYP	TYPICAL
PIP	POURED IN PLACE

ACCESSIBILITY NOTES

1. ALL SITE WORK SHALL COMPLY WITH CURRENT CALIFORNIA BUILDING CODE (CALIFORNIA CODE OF REGULATIONS TITLE 24), CURRENT STANDARDS OF THE AMERICANS WITH DISABILITIES ACT (ADA), AND THE CURRENT FAIR HOUSING ACT DESIGN MANUAL.
2. ALL PAVING AREAS SHALL BE ACCESSIBLE PER TITLE 24. ALL PAVING SURFACES ARE TO BE STABLE, FIRM, AND SLIP RESISTANT WITH CROSS SLOPES NOT TO EXCEED 2% IN ANY DIRECTION, UNLESS OTHERWISE NOTED. ACCESSIBLE PATHS OF TRAVEL ARE BARRIER-FREE ACCESS ROUTES AT LEAST 48" CLEAR IN WIDTH AND WITHOUT ANY ABRUPT VERTICAL LEVEL CHANGES EXCEEDING 1/2" IF BEVELED AT 1:2 MAX SLOPE, OR VERTICAL LEVEL CHANGES NOT EXCEEDING 1/4" MAX. ALL ACCESSIBLE PATHWAYS SHALL BE SLOPED LESS THAN 5% IN THE DIRECTION OF TRAVEL, UNLESS OTHERWISE NOTED.
3. ALL ACCESSIBLE PATHS OF TRAVEL SHALL BE MAINTAINED FREE OF OVERHANGING OBSTRUCTIONS BELOW 80" ABOVE FINISH GRADE. OBJECTS WITH LEADING EDGES LOCATED BETWEEN 27" AND 80" ABOVE FINISH GRADE SHALL NOT PROTRUDE MORE THAN 4" HORIZONTALLY INTO THE PATH OF TRAVEL. EXCEPTIONS INCLUDE HANDRAILS, DOOR CLOSERS, AND DOOR STOPS. GUARDRAILS OR OTHER BARRIERS SHALL BE PROVIDED WHERE OBJECT PROTRUSION IS BEYOND THE LIMITS ALLOWED.

AGENCY APPROVAL STAMP:

IDENTIFICATION STAMP
DIV. OF THE STATE ARCHITECT
APP: 01-120890 INC:
REVIEWED FOR
SS ☑ FLS ☑ ACS ☑
DATE: 10/25/2023

TLCDARCHITECTURE
520 Third St. #250
Santa Rosa, CA 95401
o: 707.525.5600
f: 707.525.5616
tlcd.com

CONSULTANT:

rhaa
Landscape Architecture & Planning
225 Miller Avenue, Mill Valley, CA 94941
T 415 383 7900 rhaa.com

STAMP:

REGISTERED LANDSCAPE ARCHITECT
No. 2500 Lindsay Lindsay
Signature
08/04/2024
Renewal Date
08/30/2023
Date
STATE OF CALIFORNIA

REVISIONS:

Number	Date	Description

NAPA VALLEY COLLEGE WINE EDUCATION CENTER

2277 NAPA VALLEJO HWY
NAPA, CA 94558

NAPA VALLEY COLLEGE

DSA APPLICATION NUMBER:
01-120890

TLCD PROJECT NUMBER:
21062.00

DATE:
08/30/2023

CONSTRUCTION PLAN

L-201

© THESE DRAWINGS ARE INSTRUMENTS OF SERVICE AND ARE THE SOLE PROPERTY OF TLCD ARCHITECTURE. ANY USE WITHOUT WRITTEN LICENSE IS PROHIBITED

6/3/2022 10:51:11 AM

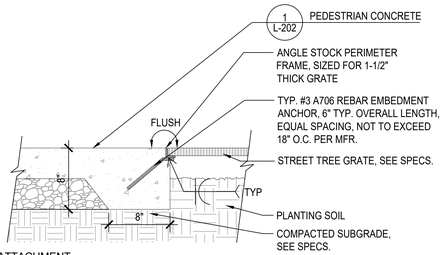

STANDARD ATTACHMENT

10 TREE GRATE AT CONCRETE

SCALE: 1-1/2" = 1'-0"

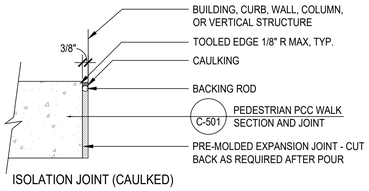

ISOLATION JOINT (CAULKED)

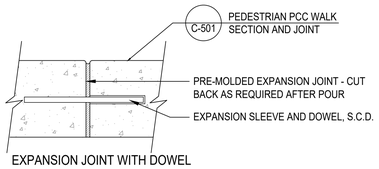

EXPANSION JOINT WITH DOWEL

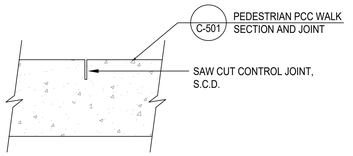

SAW-CUT SCORE / CONTROL JOINT

NOTES:
1. PROVIDE ISOLATION JOINTS AT ALL WALLS, COLUMNS AND SIMILAR VERTICAL STRUCTURES.
2. EXPANSION JOINTS AS SHOWN ON PLAN.
3. DOWEL IS TYPICAL AT ALL EJ'S EXCEPT AGAINST CURBS, WALLS, COLUMNS OR SIMILAR VERTICAL STRUCTURES, UNLESS OTHERWISE NOTED ON THE DRAWING.

7 EXPANSION AND CONTROL JOINTS

SCALE: 3" = 1'-0"

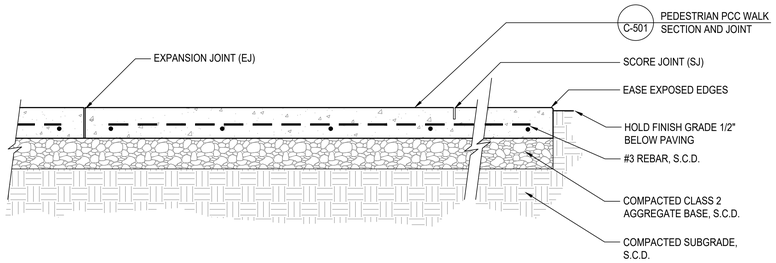

NOTES:
1. MEDIUM BROOM FINISH, UNLESS OTHERWISE NOTED ON PLANS.
2. PROVIDE SCORE JOINTS (SJ) AND EXPANSION JOINTS (EJ) AS SHOWN ON PLAN.
3. PROVIDE (EJ) MAX. 18' O.C. BOTH DIRECTIONS, ADJACENT TO BUILDINGS, WALLS, AND OTHER VERTICAL ELEMENTS, UNLESS OTHERWISE NOTED ON PLANS.

CONCRETE TYPES	
TYPE 1	TYPE 2
STANDARD CONCRETE	INTEGRAL COLOR, PEBBLE SEE SPECS SECTION 32 13 12 LANDSCAPE CONCRETE

1 PEDESTRIAN CONCRETE

SCALE: 1-1/2" = 1'-0"

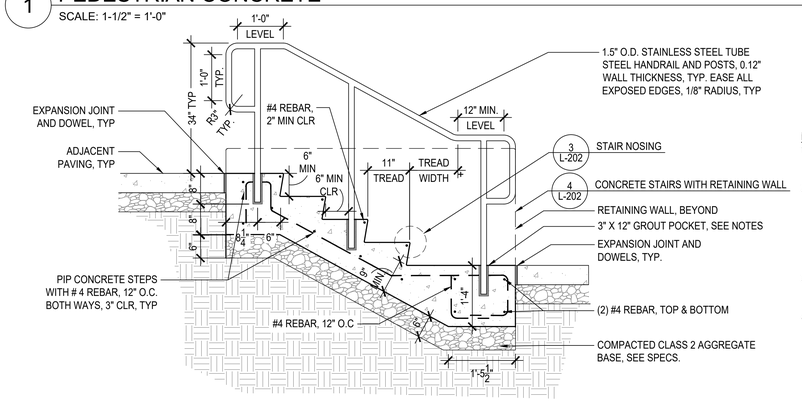

NOTES: .
1. INSTALL HANDRAIL PLUMB AND LEVEL W/ EXTENSIONS IN DIRECTION OF TRAVEL. SEE PLANS FOR LOCATION OF HANDRAILS.
2. EMBED POSTS W/ QUICK SETTING NON-SHRINK GROUT, SEE SECTION 2.1 IN LANDSCAPE METALWORK SPEC 05 70 05. GROUT POCKET 1" LARGER THAN POSTS. KEEP GROUT POCKET 2" CLEAR MIN. OF EDGE OF CONCRETE AND 3" CLEAR MIN OF ALL EXPANSION JOINTS.
3. TREADS TO BE SLIP RESISTANT AND BUILT SO THAT WATER WILL NOT ACCUMULATE ON THEM (1.5% MAX SLOPE)
4. DOWEL TOP AND BOTTOM OF STAIRS TO ADJACENT PAVING AND WALLS, SEE SPECS.

2 CONCRETE STAIR WITH HANDRAIL

SCALE: 3/4" = 1'-0"

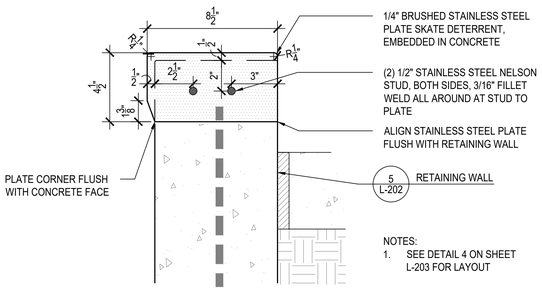

NOTES:
1. SEE DETAIL 4 ON SHEET L-203 FOR LAYOUT

11 SKATE DETERRENT ON RETAINING WALL

3"=1'-0"

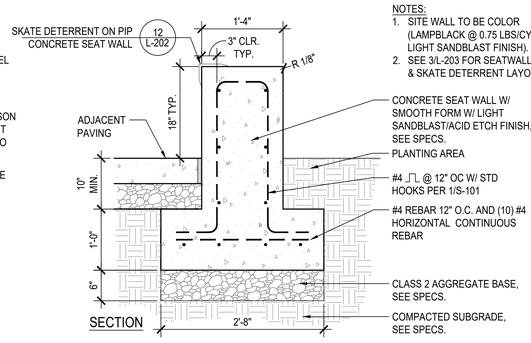

NOTES:
1. SITE WALL TO BE COLOR (LAMPBLACK @ 0.75 LBS/CY W/ LIGHT SANDBLAST FINISH).
2. SEE 3/L-203 FOR SEATWALL TYPES & SKATE DETERRENT LAYOUT

8 PIP CONCRETE SEATWALL

SCALE: 1" = 1'-0"

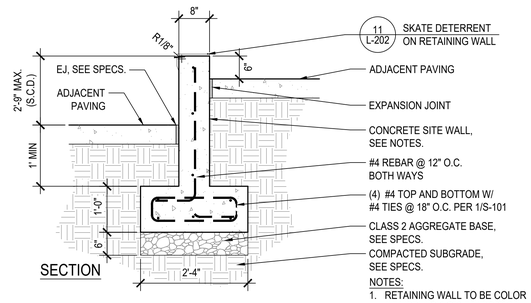

NOTES:
1. RETAINING WALL TO BE COLOR (LAMPBLACK @ 0.75 LBS/CY) W/ LIGHT SANDBLAST/ACID ETCH FINISH.

5 RETAINING WALL

SCALE: 3/4" = 1'-0"

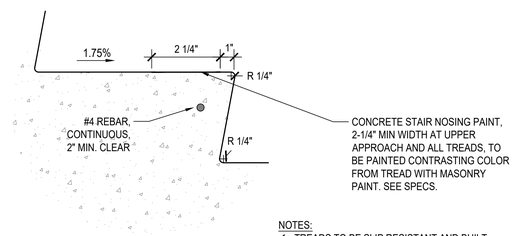

NOTES:
1. TREADS TO BE SLIP RESISTANT AND BUILT SO THAT WATER WILL NOT ACCUMULATE ON THEM (1.8% MAX SLOPE).

3 STAIR AND NOSING DETAIL

SCALE: 3" = 1'-0"

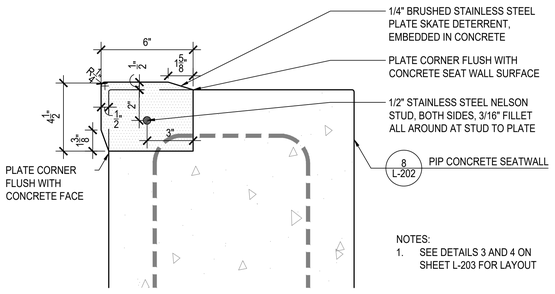

NOTES:
1. SEE DETAILS 3 AND 4 ON SHEET L-203 FOR LAYOUT

12 SKATE DETERRENT ON PIP CONCRETE SEATWALL

3" = 1'-0"

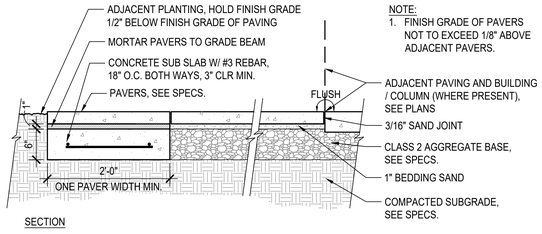

NOTE:
1. FINISH GRADE OF PAVERS NOT TO EXCEED 1/8" ABOVE ADJACENT PAVERS.

6 PAVERS - SAND SET

1" = 1'-0"

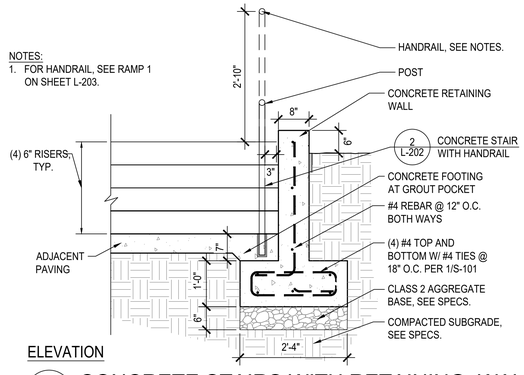

NOTES:
1. FOR HANDRAIL, SEE RAMP 1 ON SHEET L-203.

4 CONCRETE STAIRS WITH RETAINING WALL

SCALE: 3/4" = 1'-0"

6/30/2022 10:51:11 AM

AGENCY APPROVAL STAMP:

IDENTIFICATION STAMP
DIV. OF THE STATE ARCHITECT
APP: 01-120890 INC:
REVIEWED FOR
SS ☑ FLS ☑ ACS ☑
DATE: 10/25/2023

TLCDARCHITECTURE
520 Third St. #250
Santa Rosa, CA 95401
o: 707.525.5600
f: 707.525.5616
tlcd.com

CONSULTANT:

rhaa
Landscape Architecture & Planning
225 Miller Avenue, Mill Valley, CA 94941
T 415 383 7900 rhaa.com

STAMP:

REVISIONS:

Number	Date	Description

NAPA VALLEY COLLEGE WINE EDUCATION CENTER
2277 NAPA VALLEJO HWY
NAPA, CA 94558

NAPA VALLEY COLLEGE

DSA APPLICATION NUMBER: 01-120890
TLCD PROJECT NUMBER: 21062.00
DATE: 08/30/2023

CONSTRUCTION DETAILS

L-202

© THESE DRAWINGS ARE INSTRUMENTS OF SERVICE AND ARE THE SOLE PROPERTY OF TLCD ARCHITECTURE. ANY USE WITHOUT WRITTEN CONSENT IS PROHIBITED.

NOTES:
1. SUBMIT SHOP DRAWINGS FOR APPROVAL BY LANDSCAPE ARCHITECT.
2. FABRIC WIDTH SHALL BE ACCORDING TO FENCE HEIGHT. TOPS OF ALL FABRIC TO BE KNUCKLED. ALL FENCE FABRIC, FRAMES, POSTS AND FASTENERS TO BE VINYL COATED PER SPECS.
3. GATES SHALL BE IN ACCORDANCE WITH CALIFORNIA ACCESSIBILITY REGULATIONS AND CITY OF NAPA REQUIREMENTS. PROVIDE SHOP DRAWINGS FOR APPROVAL.
4. EACH GATE TO HAVE CLEAR OPENING OF 32" MIN.

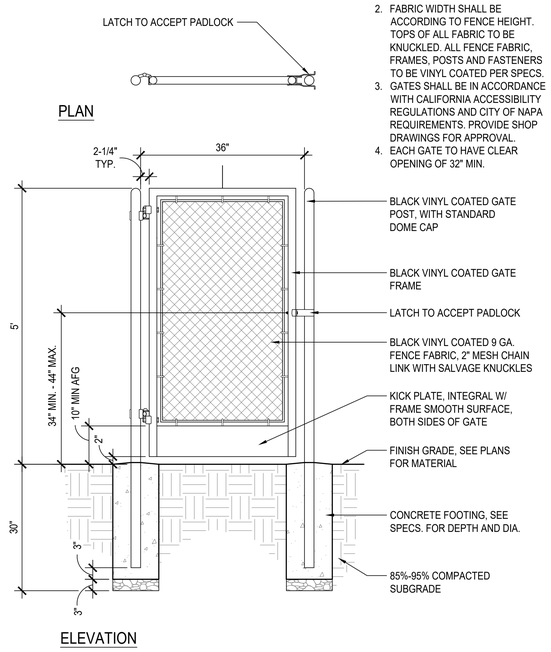

5 5' CHAINLINK FENCE GATE
NOT TO SCALE

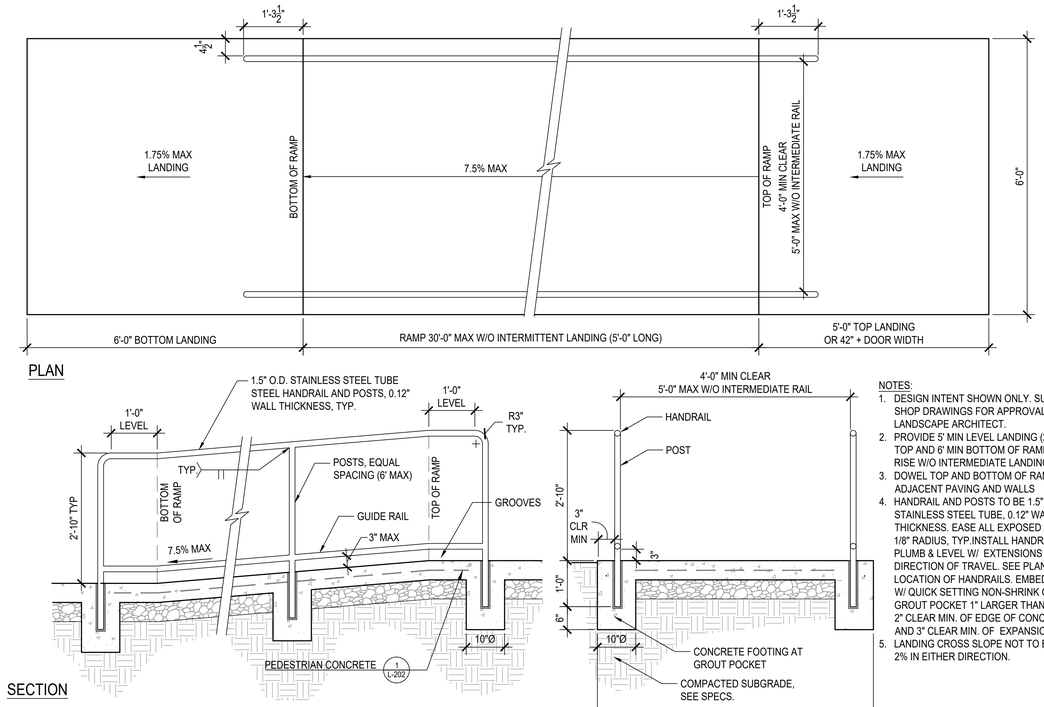

NOTES:
1. DESIGN INTENT SHOWN ONLY. SUBMIT SHOP DRAWINGS FOR APPROVAL BY LANDSCAPE ARCHITECT.
2. PROVIDE 5' MIN LEVEL LANDING (2% MAX) TOP AND 6' MIN BOTTOM OF RAMP. 30" MAX RISE W/O INTERMEDIATE LANDING.
3. DOWEL TOP AND BOTTOM OF RAMP TO ADJACENT PAVING AND WALLS
4. HANDRAIL AND POSTS TO BE 1.5" Ø STAINLESS STEEL TUBE, 0.12" WALL THICKNESS. EASE ALL EXPOSED EDGES, 1/8" RADIUS, TYP.INSTALL HANDRAIL PLUMB & LEVEL W/ EXTENSIONS IN DIRECTION OF TRAVEL. SEE PLANS FOR LOCATION OF HANDRAILS. EMBED POSTS W/ QUICK SETTING NON-SHRINK GROUT. GROUT POCKET 1" LARGER THAN POSTS, 2" CLEAR MIN. OF EDGE OF CONCRETE AND 3" CLEAR MIN. OF EXPANSION JOINTS.
5. LANDING CROSS SLOPE NOT TO EXCEED 2% IN EITHER DIRECTION.

1 RAMP AND HANDRAIL
SCALE: 3/4" = 1'-0"

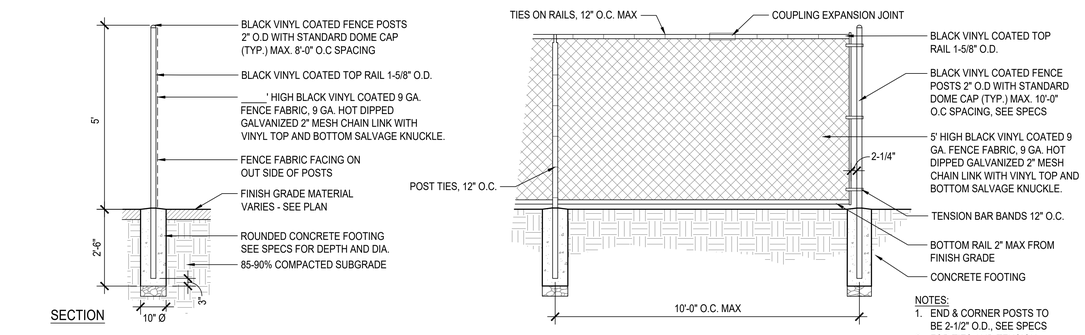

NOTES:
1. END & CORNER POSTS TO BE 2-1/2" O.D., SEE SPECS
2. FOR TIES AND TENSION BARS, SEE SPECS

2 5' CHAINLINK FENCE
SCALE: 1/2" = 1'-0"

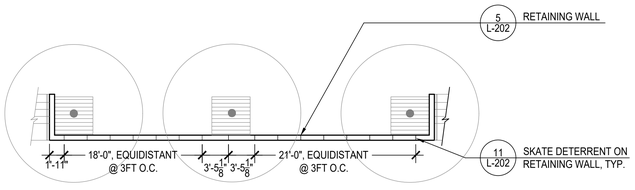

4 DETERRENT LAYOUT @ RETAINING WALL
1/8" = 1'-0"

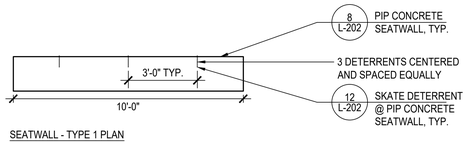

3 SKATE DETERRENT LAYOUT @ SEATWALL
3/8" = 1'-0"

AGENCY APPROVAL STAMP:

IDENTIFICATION STAMP
DIV. OF THE STATE ARCHITECT
APP: 01-120890 INC:
REVIEWED FOR
SS ☑ FLS ☑ ACS ☑
DATE: 10/25/2023

TLCDARCHITECTURE
520 Third St. #250
Santa Rosa, CA 95401
o: 707.525.5600
f: 707.525.5616
tlcd.com

CONSULTANT:

rhaa
Landscape Architecture & Planning
225 Miller Avenue, Mill Valley, CA 94941
T 415 383 7900 rhaa.com

STAMP:

REGISTERED LANDSCAPE ARCHITECT
Benjamin Lindburg Lindburg
Signature
08/04/2024
Renewal Date
08/30/2023
Date
STATE OF CALIFORNIA

REVISIONS:

Number	Date	Description

NAPA VALLEY COLLEGE WINE EDUCATION CENTER
2277 NAPA VALLEJO HWY
NAPA, CA 94558

NAPA VALLEY COLLEGE

DSA APPLICATION NUMBER:
01-120890

TLCD PROJECT NUMBER:
21062.00

DATE:
08/30/2023

CONSTRUCTION DETAILS

L-203

© THESE DRAWINGS ARE INSTRUMENTS OF SERVICE AND ARE THE SOLE PROPERTY OF TLCD ARCHITECTURE. ANY USE WITHOUT WRITTEN CONSENT IS PROHIBITED.

6/2/2022 10:51:11 AM

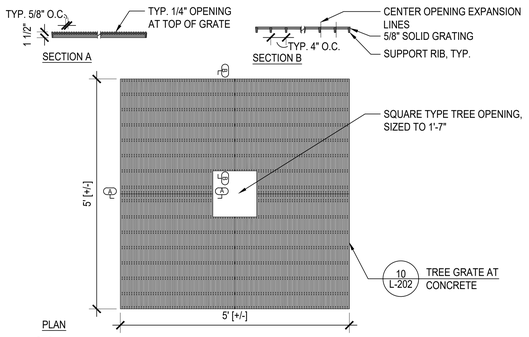

5 TREE GRATE

3/4" = 1'-0"

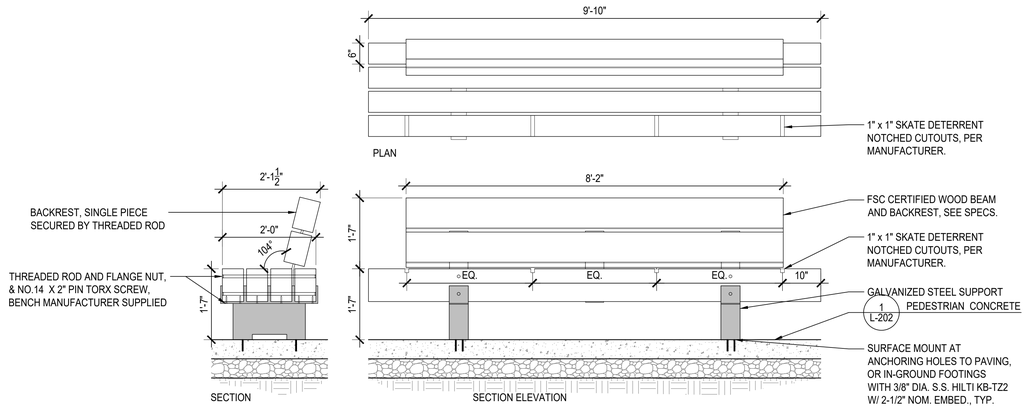

BENCH TYPE 2 IN PAVING

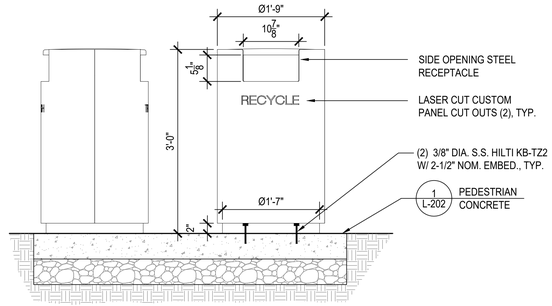

1 RECYCLING RECEPTACLE

1" = 1'-0"

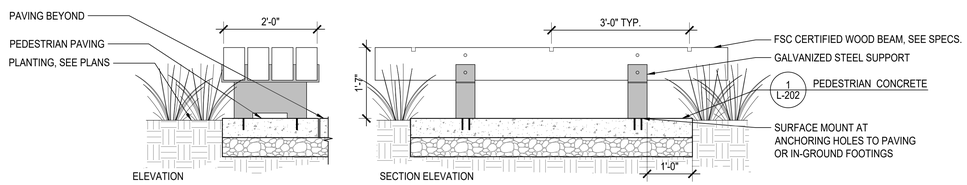

BENCH - TYPE 1 IN PLANTING

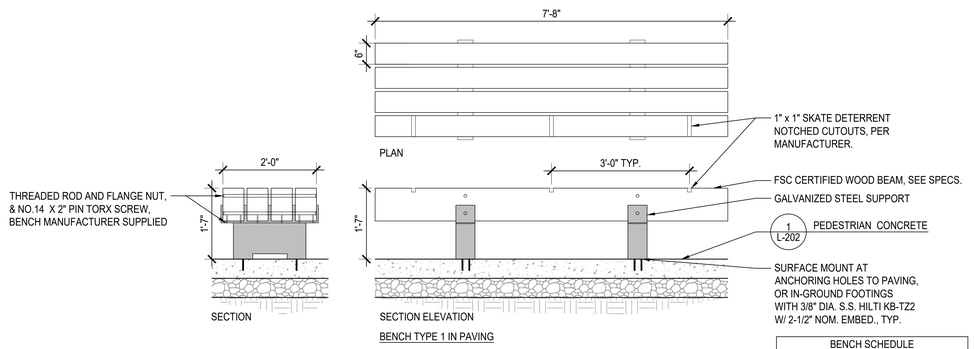

BENCH TYPE 1 IN PAVING

BENCH SCHEDULE			
BENCH	LENGTH	BACKED	QUANTITY
TYPE 1	7'-8"	NO	6
TYPE 2	9'-10"	YES	3

3 BENCH

3/4" = 1'-0"

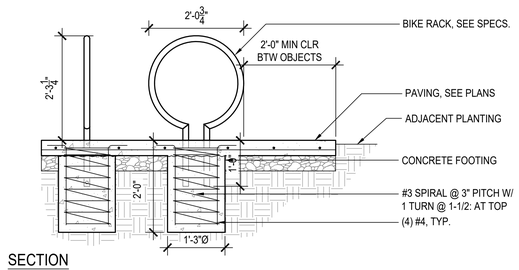

SECTION

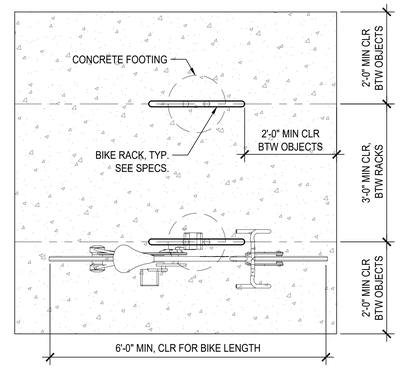

PLAN

2 BIKE RACK - EMBEDDED

SCALE: 3/4" = 1'-0"

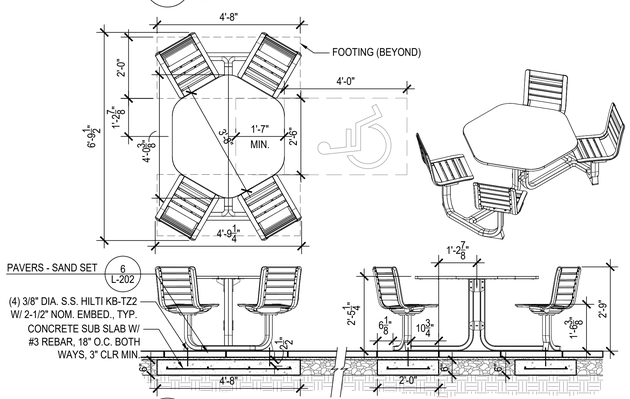

4 TABLES AND CHAIRS

1/2" = 1'-0"

6/2/2022 10:51:11 AM

AGENCY APPROVAL STAMP:

IDENTIFICATION STAMP
DIV. OF THE STATE ARCHITECT
APP: 01-120890 INC:
REVIEWED FOR
SS ☑ FLS ☑ ACS ☑
DATE: 10/25/2023

TLCDARCHITECTURE
520 Third St. #250
Santa Rosa, CA 95401
o: 707.525.5600
f: 707.525.5616
tlcd.com

CONSULTANT:

rhaa
Landscape Architecture & Planning
225 Miller Avenue, Mill Valley, CA 94941
T 415 383 7900 rhaa.com

STAMP:

LICENSED LANDSCAPE ARCHITECT
No. 2457 Lindsay Lister Rhodes
Signature
08/04/2024
Renewal Date
08/30/2023
Date
STATE OF CALIFORNIA

REVISIONS:

Number	Date	Description

NAPA VALLEY COLLEGE WINE EDUCATION CENTER

2277 NAPA VALLEJO HWY
NAPA, CA 94558

NAPA VALLEY COLLEGE

DSA APPLICATION NUMBER:
01-120890

TLCD PROJECT NUMBER:
21062.00

DATE:
08/30/2023

CONSTRUCTION DETAILS

L-204

© THESE DRAWINGS ARE INSTRUMENTS OF SERVICE AND ARE THE SOLE PROPERTY OF TLCD ARCHITECTURE. ANY USE WITHOUT WRITTEN CONSENT IS PROHIBITED.

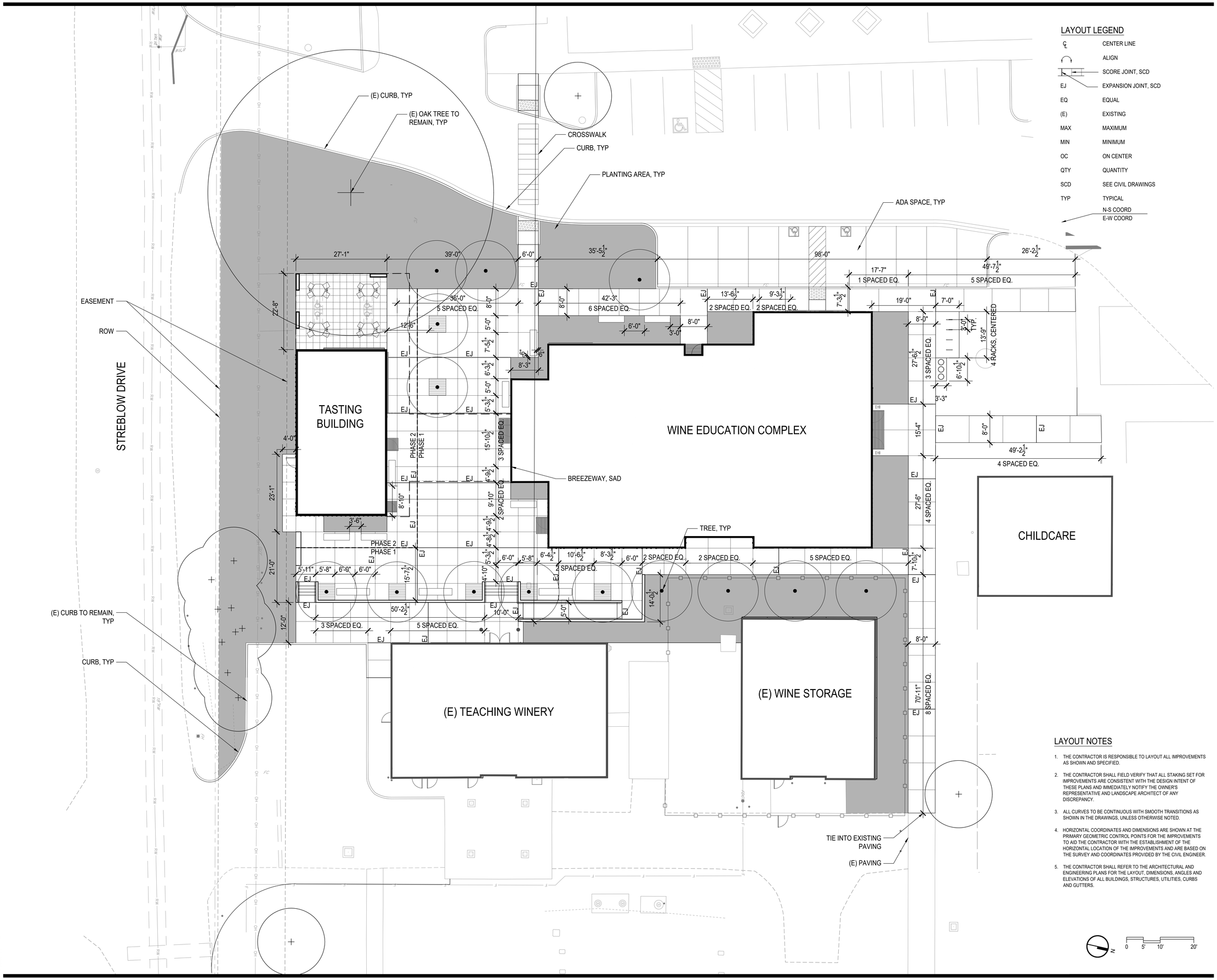

LAYOUT LEGEND

℄	CENTER LINE
	ALIGN
	SCORE JOINT, SCD
EJ	EXPANSION JOINT, SCD
EQ	EQUAL
(E)	EXISTING
MAX	MAXIMUM
MIN	MINIMUM
OC	ON CENTER
QTY	QUANTITY
SCD	SEE CIVIL DRAWINGS
TYP	TYPICAL
	N-S COORD
	E-W COORD

LAYOUT NOTES

1. THE CONTRACTOR IS RESPONSIBLE TO LAYOUT ALL IMPROVEMENTS AS SHOWN AND SPECIFIED.
2. THE CONTRACTOR SHALL FIELD VERIFY THAT ALL STAKING SET FOR IMPROVEMENTS ARE CONSISTENT WITH THE DESIGN INTENT OF THESE PLANS AND IMMEDIATELY NOTIFY THE OWNER'S REPRESENTATIVE AND LANDSCAPE ARCHITECT OF ANY DISCREPANCY.
3. ALL CURVES TO BE CONTINUOUS WITH SMOOTH TRANSITIONS AS SHOWN IN THE DRAWINGS, UNLESS OTHERWISE NOTED.
4. HORIZONTAL COORDINATES AND DIMENSIONS ARE SHOWN AT THE PRIMARY GEOMETRIC CONTROL POINTS FOR THE IMPROVEMENTS TO AID THE CONTRACTOR WITH THE ESTABLISHMENT OF THE HORIZONTAL LOCATION OF THE IMPROVEMENTS AND ARE BASED ON THE SURVEY AND COORDINATES PROVIDED BY THE CIVIL ENGINEER.
5. THE CONTRACTOR SHALL REFER TO THE ARCHITECTURAL AND ENGINEERING PLANS FOR THE LAYOUT, DIMENSIONS, ANGLES AND ELEVATIONS OF ALL BUILDINGS, STRUCTURES, UTILITIES, CURBS AND GUTTERS.

N 0 5' 10' 20'

6/3/2022 10:51:11 AM

AGENCY APPROVAL STAMP:

IDENTIFICATION STAMP
DIV. OF THE STATE ARCHITECT
APP: 01-120890 INC:
REVIEWED FOR
SS ☑ FLS ☑ ACS ☑
DATE: 10/25/2023

TLCDARCHITECTURE
520 Third St. #250
Santa Rosa, CA 95401
o: 707.525.5600
f: 707.525.5616
tlcd.com

CONSULTANT:
rhaa
Landscape Architecture & Planning
225 Miller Avenue, Mill Valley, CA 94941
T 415 383 7900 rhaa.com

STAMP:

LICENSED LANDSCAPE ARCHITECT
No. 2450 Lindburg Lindburg
Signature Date 08/04/2024
Renewal Date 08/30/2023
Date
STATE OF CALIFORNIA

REVISIONS:

Number	Date	Description

NAPA VALLEY COLLEGE WINE EDUCATION CENTER

2277 NAPA VALLEJO HWY
NAPA, CA 94558

NAPA VALLEY COLLEGE

DSA APPLICATION NUMBER:
01-120890

TLCD PROJECT NUMBER:
21062.00

DATE:
08/30/2023

LAYOUT PLAN

L-301

© THESE DRAWINGS ARE INSTRUMENTS OF SERVICE AND ARE THE SOLE PROPERTY OF TLCD ARCHITECTURE. ANY USE WITHOUT WRITTEN LICENSE IS PROHIBITED.

IRRIGATION NOTES

1. REFER TO PLANS, DETAILS AND SPECIFICATIONS FOR IRRIGATION SYSTEM COMPONENTS, INSTALLATION, MAINTENANCE, SCHEDULING, AND REPORTING REQUIREMENTS.
2. THE CONTRACTOR SHALL COMPLY WITH LOCAL WATER DISTRICT PROCEDURES & REQUIREMENTS, ALL CITY OF NAPA REQUIREMENTS, AND THE STATE WATER EFFICIENT LANDSCAPE ORDINANCE. ORDINANCE CRITERIA HAS BEEN APPLIED ACCORDINGLY FOR THE EFFICIENT USE OF WATER IN THE IRRIGATION DESIGN PLAN.
3. THESE IRRIGATION DRAWINGS ARE DIAGRAMMATIC AND INDICATIVE OF THE WORK TO BE INSTALLED. ALL PIPING, VALVES, AND OTHER IRRIGATION COMPONENTS ARE TO BE INSTALLED WITHIN PLANTING AREAS TO THE GREATEST EXTENT POSSIBLE. DUE TO THE SCALE OF THE DRAWINGS, IT IS NOT POSSIBLE TO INDICATE ALL OFFSETS, FITTINGS, SLEEVES, CONDUIT, AND OTHER ITEMS WHICH MAY BE REQUIRED.
4. THE CONTRACTOR IS TO INVESTIGATE THE EXISTING AND PROPOSED FINISHED CONDITION OF THE WORK. THE CONTRACTOR SHALL IMMEDIATE NOTIFY THE OWNER'S REPRESENTATIVE OF ANY CONFLICTS AND/OR DISCREPANCIES BETWEEN EXISTING AND PROPOSED CONDITIONS WHICH WILL AFFECT THE WORK, BEFORE PROCEEDING WITH THE WORK. IN THE EVENT THESE NOTIFICATIONS ARE NOT PERFORMED, THE CONTRACTOR ASSUMES FULL RESPONSIBILITY FOR REQUIRED REVISIONS.
5. THE CONTRACTOR SHALL COORDINATE ALL WORK WITH OTHER TRADES, INCLUDING THE INSTALLATION OF ALL PIPE, CONDUIT AND SLEEVES THROUGH OR UNDER WALLS, ROADWAYS, PAVING AND STRUCTURES.
6. PRIOR TO TRENCHING AND DIGGING, CONTACT USA "811" TO LOCATE ALL UNDERGROUND UTILITIES. THE CONTRACTOR SHALL BE RESPONSIBLE FOR MINOR CHANGES IN THE IRRIGATION LAYOUT DUE TO OBSTRUCTIONS NOT SHOWN ON THE IRRIGATION DRAWINGS SUCH AS UNDERGROUND UTILITIES, VAULTS, ETC. THE CONTRACTOR SHALL AVOID CONFLICTS WITH UNDERGROUND UTILITIES, NEW PLANTING, SITE OR ARCHITECTURAL ELEMENTS, AND EXISTING TREES; ANY DAMAGE TO THESE CAUSED BY THE INSTALLATION OF THE IRRIGATION SYSTEM SHALL BE REPAIRED AND/OR REPLACED AT NO EXPENSE TO THE OWNER.
7. DO NOT TRENCH OR INSTALL IRRIGATION PIPING OR EQUIPMENT IN LIME-TREATED SOIL.
8. THE CONTRACTOR SHALL VERIFY FLOW RATE AND PRESSURE AT THE POINT OF CONNECTION PRIOR TO THE INSTALLATION OF THE IRRIGATION SYSTEM AND NOTIFY THE OWNER'S REPRESENTATIVE OF TEST RESULTS BEFORE CONSTRUCTION BEGINS. NOTIFY LANDSCAPE ARCHITECT IF PRESSURE IS GREATER OR LESS THAN THE STATIC PRESSURE STATED ON THE PLANS TO DETERMINE IF PRESSURE REGULATION OR A BOOSTER PUMP IS REQUIRED.
9. THE CONTRACTOR SHALL OBTAIN AS-BUILT IRRIGATION DRAWINGS OF ALL EXISTING IRRIGATION SYSTEM(S) FROM THE OWNER'S REPRESENTATIVE FOR REFERENCE DURING NEW AND RETROFIT WORK.
10. CONTRACTOR TO FIELD VERIFY CONDITION OF ALL EXISTING IRRIGATION EQUIPMENT IMPACTED BY NEW CONSTRUCTION AND REPAIR AND REPLACE AS NECESSARY.
11. INSTALL ALL IRRIGATION EQUIPMENT PER MANUFACTURER'S RECOMMENDATIONS.
12. WHERE PIPE SIZES HAVE BEEN OMITTED OR THERE IS A CONFLICT, REFER TO THE LATERAL PIPE SIZING CHART FOR SIZES. AS CHANGES IN LAYOUT OCCUR DURING STAKING AND CONSTRUCTION, PIPE SIZES MAY NEED TO BE ADJUSTED ACCORDINGLY. ALL LATERAL END RUNS SHALL BE 1" SIZE UNLESS OTHERWISE NOTED.
13. THE REMOTE CONTROL VALVES SPECIFIED ON THE DRAWINGS ARE PRESSURE REDUCING TYPES. SET THE DISCHARGE PRESSURE AS RECOMMENDED BY MANUFACTURER.
14. CONTRACTOR TO ASSUME (4) ADDITIONAL CONTROL VALVES TO BE INSTALLED AS NEEDED.
15. LARGE AREAS OF ORNAMENTAL GRASSES ARE TO BE IRRIGATED BY A DEDICATED CONTROL VALVE.
16. **NON-POTABLE IRRIGATION NOTE:** THIS SYSTEM IS BEING INSTALLED FOR NON-POTABLE WATER USE. ALL PIPE, EQUIPMENT, HEADS, AND FITTINGS SHALL BE COLOR-CODED AND LABELED FOR NON-POTABLE USE PER ALL APPLICABLE STATE AND LOCAL CODES.
17. LOCATE BUBBLERS AND EMITTERS ON UPHILL SIDE OF PLANT OR TREE.
18. CONTRACTOR TO MAINTAIN EXISTING PLANTED AREAS THROUGHOUT CONSTRUCTION AND COORDINATE OPERATIONS TO KEEP EXISTING PLANTING AREAS ALIVE AND HEALTHY. EXISTING AND NEW IRRIGATION SYSTEMS SHALL BE INSTALLED, ADJUSTED AND MAINTAINED TO PROVIDE 100% COVERAGE OF PLANTING AREAS AND TO PREVENT MISTING, OVERSPRAY AND RUNOFF ONTO BUILDINGS, WALLS WINDOWS, PAVED AREAS, ETC.
19. FLUSH AND ADJUST IRRIGATION EMITTERS, NOZZLES AND OUTLETS FOR OPTIMUM PERFORMANCE AND TO PREVENT OVER SPRAY ONTO WALKS, ROADWAYS, AND/OR BUILDINGS. SELECT THE BEST DEGREE OF ARC AND RADIUS TO FIT THE EXISTING SITE CONDITIONS AND THROTTLE THE FLOW CONTROL AT EACH VALVE TO OBTAIN THE OPTIMUM OPERATING PRESSURE FOR EACH CONTROL ZONE.
20. CONTRACTOR SHALL MAKE FINAL CONNECTION BETWEEN ELECTRICAL SUPPLY AND THE CONTROLLER, AND BETWEEN THE MAIN LINE AND WATER SOURCE AT THE POINT OF CONNECTION(S).
21. THE INTENT OF THIS IRRIGATION SYSTEM IS TO PROVIDE THE MINIMUM AMOUNT OF WATER REQUIRED TO SUSTAIN GOOD PLANT HEALTH. IT IS THE RESPONSIBILITY OF THE LANDSCAPE MAINTENANCE CONTRACTOR TO PROGRAM THE IRRIGATION CONTROLLER(S) TO PROVIDE THE MINIMUM AMOUNT OF WATER NEEDED TO SUSTAIN GOOD PLANT HEALTH. THIS INCLUDES MAKING ADJUSTMENTS TO THE PROGRAM FOR SEASONAL WEATHER CHANGES, PLANT MATERIAL, WATER REQUIREMENTS, MOUNDS AND SLOPES, SUN, SHADE AND WIND EXPOSURE.
22. THE CONTRACTOR SHALL COORDINATE VALVE NUMBERING, CONTROLLER OPERATIONS AND PROGRAMMING WITH OWNER'S REPRESENTATIVE.
23. STATION OPERATION TIMES SHALL NOT DELIVER WATER EXCEED THE SOIL INFILTRATION RATE(S) AS DETERMINED BY THE SOILS REPORT(S).
24. THE CONTRACTOR SHALL PROVIDE THE OWNER'S REPRESENTATIVE WITH CLEAR AS-BUILT PLANS OF THE INSTALLED OF IRRIGATION SYSTEM.

IRRIGATION 2 WIRE SYSTEM

1. INSTALL 2-WIRE CABLE WITHIN SCH.40 1.25" CONDUIT WITH LONG SWEEPS IN AND OUT OF EACH VALVE BOX. SEAL ALL CONDUIT OPENINGS WITH WATERPROOF FOAM.
2. EVERY CHANGE IN DIRECTION. ONLY SPLICE TWO WIRE CABLE AT THREE WAY WIRE CONNECTIONS.
3. IRRIGATION CONTROL WIRES: SOLID COPPER WITH U.L. APPROVAL FOR DIRECT BURIAL IN GROUND. SIZE #14AWG WIRE WITH A JACKETED 2-CONDUCTOR. PREFERRED WIRE MAKE AND MODEL IS THE PAIGE IRRIGATION WIRE, SPEC P7072D. ALL SPLICING SHALL BE MADE WITH 3-M DBR/Y-6 WATERPROOF SPLICE KIT.
4. DECODER GROUNDING SHALL BE PROVIDED EVERY (500 FEET OR EVERY 8 DECODERS, WHICHEVER IS SMALLER, AT THE CONTROLLER AND AT THE LAST DECODER OR AT THE END OF THE 2 WIRE PATH. GROUND WITH A 5/8" X 8' COPPER CLAD GROUNDING ROD. #6 COPPER WIRE TO SURGE DEVICE/DECODER. INCLUDE A SURGE ARRESTOR AT EACH GROUNDING LOCATION. A SPLIT BOLT CONNECTION TO BE USED TO CONNECT THE SURGE DEVICE TO THE GROUND WIRE WITH A DBR/Y-6 WATERPROOF CONNECTOR.
5. SPLICING OF JACKETED 2-WIRE IS PERMITTED IN VALVE BOXES ONLY. LEAVE A 24" LONG COIL OF WIRE AT EACH SPLICE AND A 24" LONG EXPANSION LOOP IN ALL PULL BOXES.

IN-LINE DRIP IRRIGATION NOTES

1. INSTALL IN-LINE DRIP IRRIGATION PER MANUFACTURER'S RECOMMENDATIONS.
2. BURY DRIP LINES PER DETAILS FOR BEST WATER DISTRIBUTION THROUGH THE SOIL AND TO PREVENT POTENTIAL DAMAGE FROM VANDALISM.
3. USE A CENTER FEED LAYOUT WHERE EVER POSSIBLE. INSTALL DRIP LINES IN LONG, LINEAR RUNS WITHOUT EXCEEDING THE RECOMMENDED MAXIMUM LENGTH OF A SINGLE LATERAL BASED ON DESIGN PRESSURE, SPACING AND FLOW RATE.
4. INSTALL MANUAL FLUSH VALVES AT THE LOW ENDS OF EACH ZONE AND SUB ZONE TO FLUSH DEBRIS FROM TECHLINE CV.
5. INSTALL AN AIR RELIEF VALVE AT THE HIGHEST POINT OF EACH ZONE/VALVE.
6. INSTALL DRIP ZONE OPERATION INDICATOR FOR EACH ZONE AS SHOWN ON PLANS.
7. INSTALL PVC SUPPLY AND EXHAUST HEADERS ON ALL ZONES AND SUB ZONES. HEADERS SHOULD BE SIZED PER MANUFACTURER'S SIZING CHART AND BASED ON FLOW RATE.
8. A SINGLE, LARGE DRIP ZONE WILL LIKELY HAVE SEVERAL SMALLER SUB ZONES THAT WILL ALSO REQUIRE CENTER-FEED LAYOUTS, PVC SUPPLY AND EXHAUST HEADERS AND FLUSH VALVES. THE EXACT LAYOUTS OF ZONES AND SUB ZONES SHALL BE DETERMINED BY THE CONTRACTOR IN THE FIELD BASED ON DRIPLINE DETAILS SHOWN ON PLANS.
9. WHERE DRIP LINE ENCOUNTERS A PLANT ROOT BALL, LAY LINE ON TOP OF OR DIRECTLY NEXT TO THE ROOT BALL AS SHOWN ON PLAN DETAILS.
10. INSTALLATION ON SLOPES REQUIRES INSTALLATION OF CHECK VALVES TO PREVENT LOW-END DRAINAGE AS SHOWN ON PLAN DETAILS.

IRRIGATION REFERENCES

- CALIFORNIA WATER EFFICIENT LANDSCAPE ORDINANCE (AB 1881), OR ADOPTED LOCAL ORDINANCE
- LOCAL WATER DISTRICT REQUIREMENTS
- LATEST EDITION OF THE UNIFORM PLUMBING CODE AND THE NATIONAL ELECTRIC CODE

IRRIGATION LEGEND

M — EX. 2" RECYCLED WATER IRRIGATION METER, S.C.D.

MV — MASTER VALVE
GRISWOLD 2000 SERIES NORMALLY OPEN, LINE SIZE

FS — FLOW SENSOR
BASELINE, BL-CP-PFS 200, 2" SIZE. FACTORY ASSEMBLY INCLUDES MASTER VALVE BICODER, CST FLOWMETER W/ BICODER, AND PRESSURE SENSOR W/ BICODER

A — CONTROLLER
BASELINE BL-3200-XS-CM4G-AT-BMW2-PLUS-5Y 2-WIRE WEATHER-BASED CONTROLLER WITH BASEMANAGER™ WEB-BASED TECH SUPPORT. INCLUDE 5-YEAR ANNUAL SUBSCRIPTION. #24 STATIONS. WALL MOUNTED 304-GRADE STAINLESS STEEL ENCLOSURE. PROVIDE FIRST GROUND 25' AWAY FROM CONTROLLER, THEN 600' THEREAFTER, AND AT SPURS OVER 50'. PROVIDE GROUND 8' OFF 2-WIRE PATH. INSTALL PER MANUFACTURER'S RECOMMENDATIONS. BL-TRAINING-IT, SEE NOTES.

S — SOIL SENSORS
BASELINE BL-5315B SOIL SENSORS. INSTALL PER MANUFACTURER'S RECOMMENDATIONS.

W — WEATHER SENSOR
BASELINE WEATHERACCESS™ SENSOR. LINK TO WEATHER UNDERGROUND STATION KCASANMA307 SUNNYBRAE STATION TO BE SET UP IN BASELINE BASEMANAGER™ WEB WEATHERACCESS™ FOR LOCALIZED WEATHER DATA

MAINLINE PIPE
SCH 40 PVC, 2" AND SMALLER, SEE SIZING CHART

LATERAL LINE PIPE
SCH 40 PVC, 1" AND LARGER, SEE SIZING CHART

6 — SLEEVE
SCH 40 PVC, SIZE AS SHOWN

EMITTER REMOTE CONTROL VALVE - LOW FLOW DRIP ZONES
RAINBIRD XERIGATION CONTROL ZONE KITS
XCZ100PRBCOM-R
PRESSURE REGULATING TYPE

GATE VALVE
NIBCO T113-IRR, LINE SIZE

QUICK COUPLING VALVE
RAINBIRD 33-DNP (PURPLE LOCKING RUBBER COVER)

SUBSURFACE DRIP IRRIGATION
RAINBIRD XFS-CVPS-6-18 DRIPLINE
1/2" POLYETHYLENE DRIP EMITTER LINE W/ PRESSURE REGULATING EMITTERS & COPPER ROOT PROTECTION & QF DRIPLINE FLEX HEADERS. 18" O.C. EMITTER SPACING. RB XFS OPERATION INDICATOR AT END OF EACH DRIP ZONE.

A1 / 0.0 / 1" — CONTROLLER / STATION NUMBER
GALLON PER MINUTE OF ZONE
VALVE SIZE

T — ROOT WATERING TREE BUBBLERS - 2 PER TREE
RAINBIRD: RWS-M-B-C-1402, 0.5 GPM,
CHECK VALVE

SYSTEM INFORMATION
NON-POTABLE WATER

70 PSI	AVAILABLE PSI AT POC
90 GPM	AVAILABLE GPM AT POC
30 PSI	OPERATING PSI FOR SYSTEM
60 GPM	OPERATING GPM FOR SYSTEM

PVC SCH 40 PIPE SIZE	
PIPE SIZE	GPM
1"	0-11
1-1/2"	12-24
2"	24-35
2-1/2"	35-60
3"	60-90

TYPICAL VALVE SIZE	
VALVE SIZE	GPM
1"	0-25
1-1/2"	26-50
2"	50-100

NOTE:
ALL PIPE SHALL BE PURPLE IN COLOR WITH LAEBELING APPROVED FOR USE WITH RECYCLED WATER SYSTEMS.

NAPA VALLEY COLLEGE WINE EDUCATION CENTER

WATER TYPE	RECYCLED
SITE ETO=	49.4

REGULAR LANDSCAPE AREAS

HYDROZONE #	HYDROZONE NAME	PLANT WATER USE TYPE	PLANT FACTOR (PF)	IRRIGATION METHOD	IRRIGATION EFFICIENCY	ETAF (PF/IE)	AREA (SQ. FT) (HA)	ETAF X AREA (HA)	ETWU (GAL/YR)	ACRE FEET/ YEAR	HCF/ YEAR	PERCENTAGE OF LANDSCAPE
1	SHRUBS	LOW	0.3	DRIP	0.81	0.37	7,571	2,804	85,883	0.26	114.82	94.74%
2	TREES	MOD	0.5	BUBBLER	0.81	0.62	420	259	7,941	0.02	10.62	5.26%
						TOTALS	7,991	3,063	93,824	0.29	125.43	100%

SPECIAL LANDSCAPE AREAS

HYDROZONE #	HYDROZONE NAME						AREA					PERCENTAGE
	ALL				1		7,991					100%
					TOTALS		7,991					100%

MAWA		
MAWA	GALLONS/YR	244,748
	ACRE FEET/YR	0.75
	HCF/YR	327.20

ETWU		
ETWU	GALLONS/YR	93,824
	ACRE FEET/YR	0.29
	HCF/YR	125.43

MAWA FORMULA
MAXIMUM APPLIED WATER ALLOWANCE (MAWA) GALLONS PER YEAR
MAWA = (ETo)(0.62)[(LA x 0.45) + (0.55 x SLA)]

ETo = REFERENCE EVAPOTRANSPIRATION
0.55= ET ADJUSTMENT FACTOR
LA=LANDSCAPED AREA (SQUARE FEET)
0.62 = CONVERSION FACTOR (GALLONS/SQ.FT/YR)

ETWU FORMULA
ESTIMATED TOTAL WATER USE (ETWU) GALLONS PER YEAR
ETWU= ((ETO)(.62)(ETAF x LA))

ETo = REFERENCE EVAPOTRANSPIRATION
PF = PLANT FACTOR FOR HYDROZONES
HA = HYDROZONE AREA (SQ.FT)
0.62 = CONVERSION FACTOR (GALLONS/SQ.FT/YR)
IE = IRRIGATION EFFICIENCY (0.81)-BUBBLER/DRIP
IE = IRRIGATION EFFICIENCY (0.75)-ROTORS/SPRAY

SITE IRRIGATION EFFICIENCY	SITE PLANT FACTOR	MAWA COMPLIANT
81.0%	0.31	YES

ETAF Calculations	
REGULAR LANDSCAPE AREAS	
TOTAL ETAF x AREA	3,063
TOTAL AREA	7,991
AVG. ETAF	38.33%

6/3/2022 10:51:11 AM

AGENCY APPROVAL STAMP:
IDENTIFICATION STAMP
DIV. OF THE STATE ARCHITECT
APP: 01-120890 INC:
REVIEWED FOR
SS ☑ FLS ☑ ACS ☑
DATE: 10/25/2023

TLCDARCHITECTURE
520 Third St. #250
Santa Rosa, CA 95401
o: 707.525.5600
f: 707.525.5616
tlcd.com

CONSULTANT:
rhaa Landscape Architecture & Planning
225 Miller Avenue, Mill Valley, CA 94941
T 415 383 7900 rhaa.com

STAMP:
LICENSED LANDSCAPE ARCHITECT
Barbara D. Lundburg License 1
Signature 08/04/2024
Renewal Date 08/30/2023
Date
STATE OF CALIFORNIA

REVISIONS:

Number	Date	Description

NAPA VALLEY COLLEGE WINE EDUCATION CENTER
2277 NAPA VALLEJO HWY
NAPA, CA 94558

NAPA VALLEY COLLEGE

DSA APPLICATION NUMBER: 01-120890
TLCD PROJECT NUMBER: 21062.00
DATE: 08/30/2023

© THESE DRAWINGS ARE INSTRUMENTS OF SERVICE AND ARE THE SOLE PROPERTY OF TLCD ARCHITECTURE; ANY USE WITHOUT WRITTEN CONSENT IS PROHIBITED.

IRRIGATION NOTES AND LEGENDS

L-400

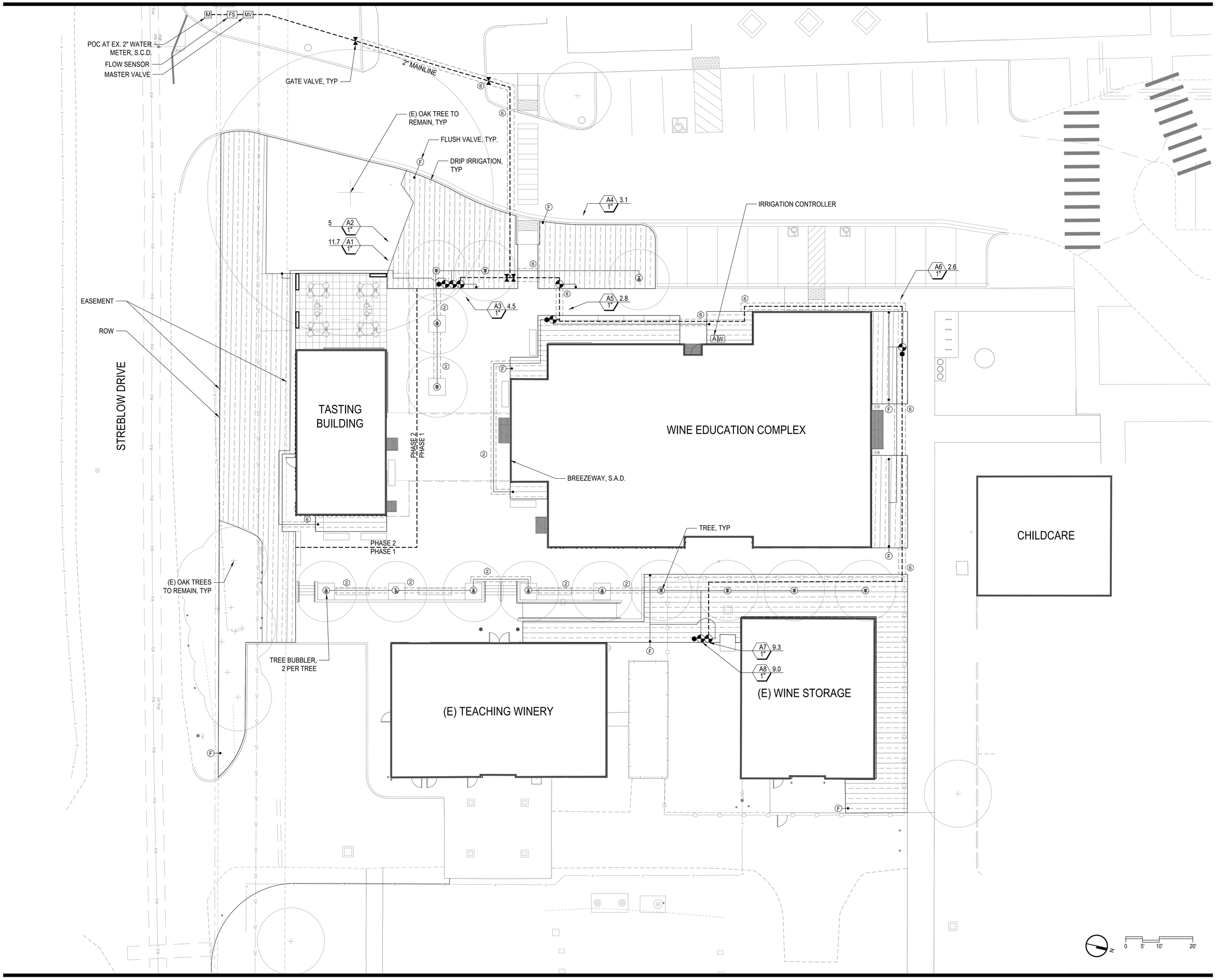

6/3/2022 10:5:11 AM

AGENCY APPROVAL STAMP:

IDENTIFICATION STAMP
DIV. OF THE STATE ARCHITECT
APP: 01-120890 INC:
REVIEWED FOR
SS ☑ FLS ☑ ACS ☑
DATE: 10/25/2023

TLCDARCHITECTURE
520 Third St. #250
Santa Rosa, CA 95401
o: 707.525.5600
f: 707.525.5616
tlcd.com

CONSULTANT:

rhaa
Landscape Architecture & Planning
225 Miller Avenue, Mill Valley, CA 94941
T 415 383 7900 rhaa.com

STAMP:

LICENSED LANDSCAPE ARCHITECT
No. 5145 Lindburg Lindsay
Signature Date
08/04/2024
Renewal Date
08/30/2023
Date
STATE OF CALIFORNIA

REVISIONS:

Number	Date	Description

NAPA VALLEY COLLEGE WINE EDUCATION CENTER

2277 NAPA VALLEJO HWY
NAPA, CA 94558

NAPA VALLEY COLLEGE

DSA APPLICATION NUMBER:
01-120890

TLCD PROJECT NUMBER:
21062.00

DATE:
08/30/2023

IRRIGATION PLAN

L-401

© THESE DRAWINGS ARE INSTRUMENTS OF SERVICE AND ARE THE SOLE PROPERTY OF TLCD ARCHITECTURE. ANY USE WITHOUT WRITTEN CONSENT IS PROHIBITED.

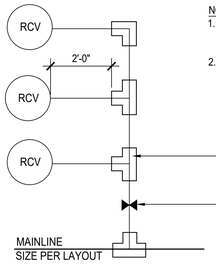

NOTES:
1. SEE IRRIGATION PLAN FOR SUGGESTED VALVE SIZES AND GROUPING. GROUP AS DICTATED BY SITE CONDITIONS.
2. MAXIMUM NUMBER OF VALVES PER MANIFOLD SHALL BE 7.

9 VALVE GROUPINGS
SCALE: 1/2" = 1'-0"

NOTES:
1. BUNDLE AND TAPE WIRE EVERY 10 FEET.
2. PROVIDE 36" EXPANSION LOOP AT EACH WIRE CONNECTION.
3. SIZE BOX TO INCLUDE RCV AND BALL VALVES.
4. CONTRACTOR TO INSTALL NECESSARY SOLENOID ADAPTOR FOR PROPER ATTACHMENT OF ACTUATOR.

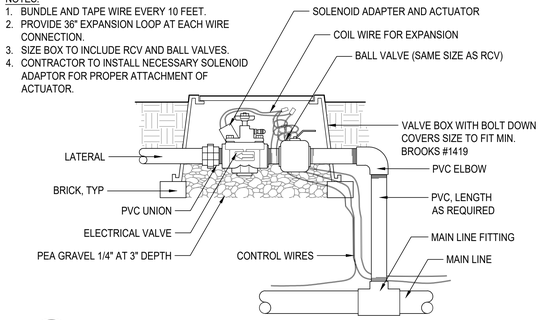

5 REMOTE CONTROL VALVE
SCALE: 3" = 1'-0"

NOTE:
1. INSTALL CONTROLLER PER MANUFACTURERS RECOMMENDATIONS FOLLOW ALL APPLICABLE ELECTRICAL CODES. CONTRACTOR TO COORDINATE IRRIGATION ELECTRICAL AND WATER CONNECTIONS.

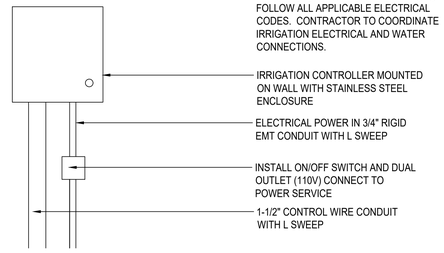

1 WALL-MOUNTED IRRIGATION CONTROL
SCALE: 3" = 1'-0"

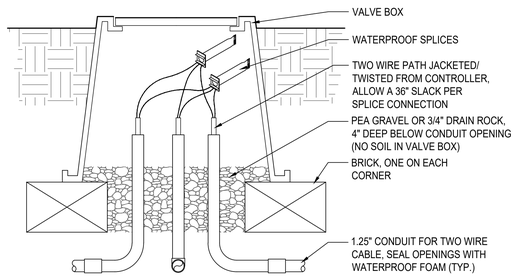

10 TWO WIRE SPLICE BOX AT MAIN LINE TEE OR 3-WAY WIRE BRANCH
NOT TO SCALE

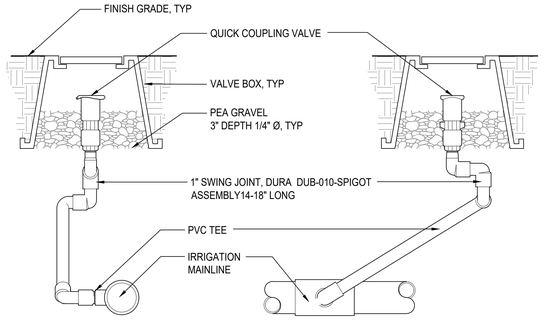

6 QUICK COUPLING VALVE
SCALE: 3" = 1'-0"

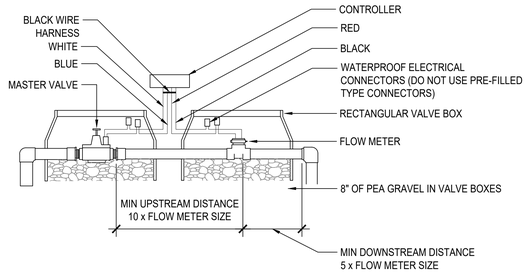

2 MASTER VALVE AND FLOW METER
SCALE: 3/4" = 1'-0"

NOTES:
1. LAY IRRIGATION SUPPLY LINE ON NATIVE SOIL BED UNLESS SAND BED IS SPECIFIED.
2. PROVIDE 36" COVER OVER ALL PIPE AND PIPE SLEEVES UNDER ROADWAYS, PARKING LOTS, ENTRANCES TO PARKING LOTS AND FIRE ACCESS LANES PER NFPA 24, SECTION 10.44.
3. PROVIDE SEPARATE SLEEVES FOR ALL WIRES CROSSING UNDER ROADWAYS, PARKING LOTS AND FIRE ACCESS LANES PER NFPA 24, SECTION 10.44. DO NOT TAPE WIRES WITHIN CONDUIT.

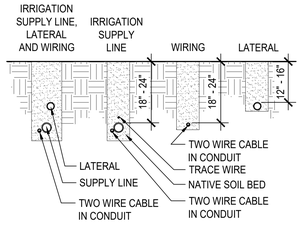

7 IRRIGATION TRENCHING - TWO WIRE
SCALE: 1/2" = 1'-0"

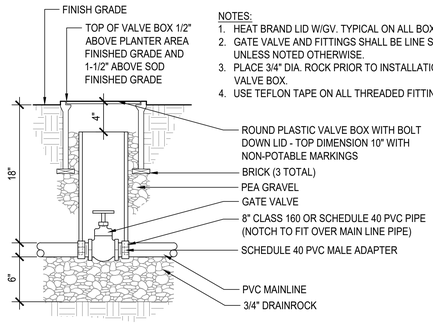

NOTES:
1. HEAT BRAND LID W/GV. TYPICAL ON ALL BOXES.
2. GATE VALVE AND FITTINGS SHALL BE LINE SIZE UNLESS NOTED OTHERWISE.
3. PLACE 3/4" DIA. ROCK PRIOR TO INSTALLATION OF VALVE BOX.
4. USE TEFLON TAPE ON ALL THREADED FITTINGS.

3 ISOLATION GATE VALVE
SCALE: 3" = 1'-0"

NOTES:
1. IDENTIFY CONTROLLER AND STATION NUMBER.
2. IDENTIFY VALVE TYPE.
3. VALVE TYPE ABBREVIATIONS:
   GV - GATE VALVE
   RCV - REMOTE CONTROL VALVE
   IV - ISOLATION VALVE
   QCV - QUICK COUPLING VALVE
4. ALL LETTERS TO BE UNIFORM, 2" IN HEIGHT, AND PARALLEL/PERPENDICULAR TO LID EDGES.
5. IDENTIFY ALL VALVES WITH TAGS.

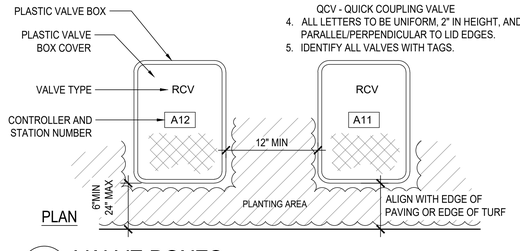

8 VALVE BOXES
SCALE: 1-1/2" = 1'-0"

NOTES:
1. BUNDLE AND TAPE WIRE EVERY 10 FEET.
2. PROVIDE 36" EXPANSION LOOP AT EACH WIRE CONNECTION.
3. SIZE BOX TO INCLUDE RCV
4. CONTRACTOR TO INSTALL NECESSARY SOLENOID ADAPTOR FOR PROPER ATTACHMENT OF ACTUATOR.

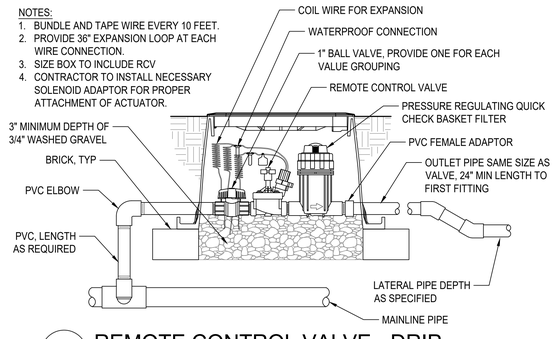

4 REMOTE CONTROL VALVE - DRIP
SCALE: 3" = 1'-0"

6/30/2022 10:51:11 AM

AGENCY APPROVAL STAMP:

IDENTIFICATION STAMP
DIV. OF THE STATE ARCHITECT
APP: 01-120890 INC:
REVIEWED FOR
SS ☑ FLS ☑ ACS ☑
DATE: 10/25/2023

TLCDARCHITECTURE
520 Third St. #250
Santa Rosa, CA 95401
o: 707.525.5600
f: 707.525.5616
tlcd.com

CONSULTANT:
rhaa
Landscape Architecture & Planning
225 Miller Avenue, Mill Valley, CA 94941
T 415 383 7900 rhaa.com

STAMP:

REGISTERED LANDSCAPE ARCHITECT
No. 2142 Lindburg Lindsay
Signature
08/04/2024
Renewal Date
08/30/2023
Date
STATE OF CALIFORNIA

REVISIONS:

Number	Date	Description

NAPA VALLEY COLLEGE WINE EDUCATION CENTER
2277 NAPA VALLEJO HWY
NAPA, CA 94558

NAPA VALLEY COLLEGE

DSA APPLICATION NUMBER:
01-120890

TLCD PROJECT NUMBER:
21062.00

DATE:
08/30/2023

IRRIGATION DETAILS

L-402

© THESE DRAWINGS ARE INSTRUMENTS OF SERVICE AND ARE THE SOLE PROPERTY OF TLCD ARCHITECTURE. ANY USE WITHOUT WRITTEN CONSENT IS PROHIBITED.

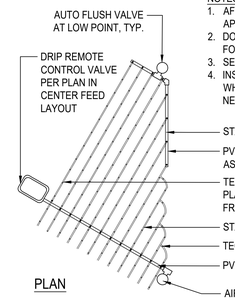

NOTES:
1. AFFIX ALL LINES TO GROUND USING SOIL STAPLES APPROXIMATELY EVERY THREE FEET FROM DRIP VALVE.
2. DO NOT EXCEED THE MANUFACTURER'S RECOMMENDATIONS FOR MAXIMUM LENGTH OF A SINGLE LATERAL.
3. SEE LEGEND FOR EMITTER AND ROW SPACING.
4. INSTALL CHECK VALVES ON SUPPLY AND EXHAUST HEADERS WHERE ELEVATION CHANGE MEETS/EXCEEDS 4-1/2' AND AS NEEDED TO PREVENT LOW-HEAD DRAINAGE.

5 IRREGULAR DRIP TUBING LAYOUT
NTS

NOTE:
1. LOCATE INDICATOR STAKE AT THE FARTHEST AND/OR HIGHEST POINT ON THE ZONE.

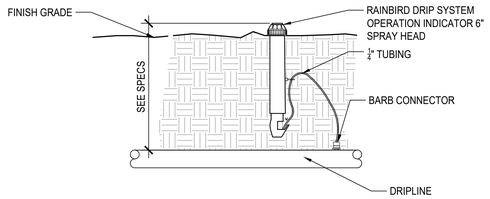

1 DRIP OPERATION INDICATOR
NTS

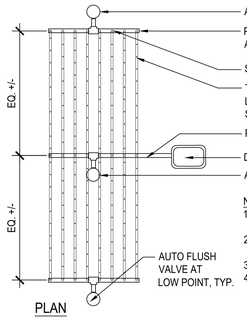

NOTES:
1. AFFIX ALL LINES TO GROUND USING SOIL STAPLES APPROXIMATELY EVERY THREE FEET FROM DRIP VALVE.
2. DO NOT EXCEED MANUFACTURER'S RECOMMENDED MAXIMUM LENGTH OF A SINGLE LATERAL, SEE CHART.
3. SEE LEGEND FOR EMITTER AND ROW SPACING.
4. INSTALL CHECK VALVES ON SUPPLY AND EXHAUST HEADERS WHERE ELEVATION MEETS/EXCEEDS 4-1/2' AND AS NEEDED TO PREVENT LOW-HEAD DRAINAGE.

6 LINEAR DRIP TUBING LAYOUT
NTS

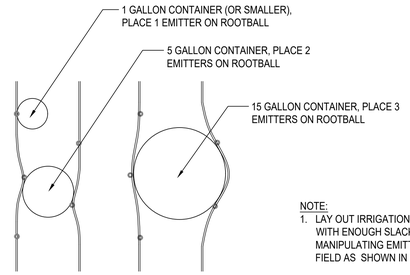

NOTE:
1. LAY OUT IRRIGATION DRIPLINE WITH ENOUGH SLACK TO ENABLE MANIPULATING EMITTERS IN THE FIELD AS SHOWN IN THIS DIAGRAM.

2 DRIP TUBING EMITTER PLACEMENT
SCALE: 1" = 1'-0"

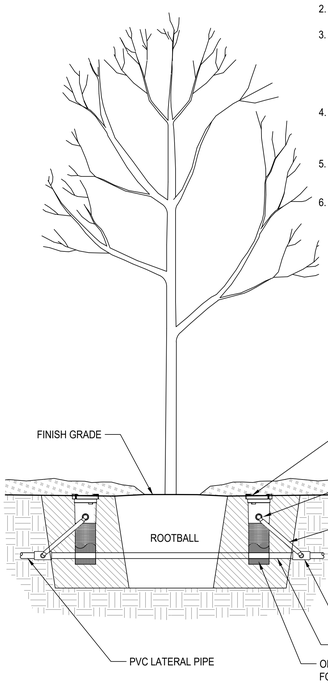

NOTES:
1. POSITION EVENLY SPACED AROUND PLANT.
2. INSTALL PRODUCT WITH TOP EVEN WITH FINISH GRADE.
3. RWS-M SERIES AVAILABLE IN THE FOLLOWING MODELS:
   RWS-M-B-C-1401: 0.25 GPM, CHECK VALVE
   RWS-M-B-1401: 0.25 GPM
   RWS-M-B-C-1402: 0.5 GPM, CHECK VALVE
   RWS-M-B-1402: 0.5 GPM
4. WHEN INSTALLING IN EXTREMELY HARD OR CLAY SOILS, ADD 3/4" GRAVEL UNDER AND AROUND THE UNIT TO ALLOW FASTER WATER INFILTRATION AND ROOT PENETRATION.
5. ONCE RWS-M HAS BEEN INSTALLED FILL THE BASKET WITH PEA GRAVEL BEFORE LOCKING LID.
6. OPTIONAL RWS-SOCK FOR USE IN SANDY SOILS.

7 ROOT WATER SYSTEM
SCALE: 3/4" = 1'-0"

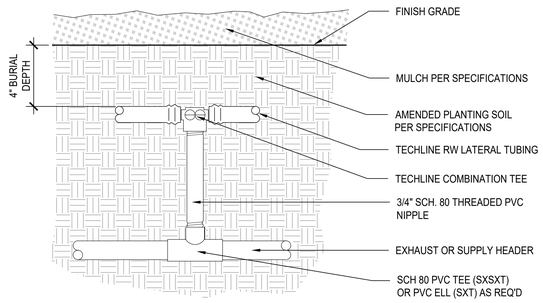

3 DRIP TUBING START CONNECTION
SCALE: 3" = 1'-0"

NOTES:
1. INSTALL TUBING PER "A" DEPTH BELOW FINISH GRADE, STAPLE IN PLACE PER LAYOUT DETAIL.

"A" DEPTH	
AT TURF	0'-6"
AT PLANTING	0'-4"

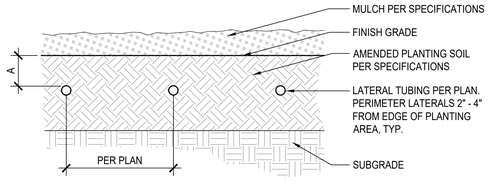

4 DRIP TUBING SUBGRADE INSTALLATION
SCALE: 1-1/2" = 1'-0"

AGENCY APPROVAL STAMP:

IDENTIFICATION STAMP
DIV. OF THE STATE ARCHITECT
APP: 01-120890 INC:
REVIEWED FOR
SS ☑ FLS ☑ ACS ☑
DATE: 10/25/2023

TLCDARCHITECTURE
520 Third St. #250
Santa Rosa, CA 95401
o: 707.525.5600
f: 707.525.5616
tlcd.com

CONSULTANT:

rhaa
Landscape Architecture & Planning
225 Miller Avenue, Mill Valley, CA 94941
T 415 383 7900 rhaa.com

STAMP:

REVISIONS:

Number	Date	Description

NAPA VALLEY COLLEGE WINE EDUCATION CENTER
2277 NAPA VALLEJO HWY
NAPA, CA 94558

NAPA VALLEY COLLEGE

DSA APPLICATION NUMBER: 01-120890
TLCD PROJECT NUMBER: 21062.00
DATE: 08/30/2023

IRRIGATION DETAILS

L-403

© THESE DRAWINGS AND NOTES/IMPLEMENTS OF SERVICE AND ARE THE SOLE PROPERTY OF TLCD ARCHITECTURE. ANY USE WITHOUT WRITTEN CONSENT IS PROHIBITED

6/2/2022 10:51:11 AM

PLANTING NOTES

1. REFER TO SPECIFICATIONS FOR SOIL PREPARATION, PLANTING, AND MAINTENANCE PERIOD REQUIREMENTS.
2. CONTRACTOR TO REFER TO PLANT LIST FOR PLANT SIZE AND SPACING. USE TRIANGULAR SPACING UNLESS OTHERWISE NOTED.
3. PLANT QUANTITIES ARE PROVIDED FOR CONTRACTOR'S CONVENIENCE ONLY. CONTRACTOR TO VERIFY ALL PLANT QUANTITIES SHOWN IN PLANTING PLANS.
4. CONTRACTOR TO SUBMIT PLANT SAMPLES FOR APPROVAL BY LANDSCAPE ARCHITECT, SEE SPECS.
5. LANDSCAPE ARCHITECT TO INSPECT PLANTING LAYOUT PRIOR TO INSTALLATION. CONTRACTOR TO PROVIDE 10' X 10' MOCKUP OF ALL PLANT MIXES FOR APPROVAL BY LANDSCAPE ARCHITECT.
6. CONTRACTOR TO VERIFY LOCATION AND DEPTH OF ALL UTILITIES, STRUCTURES, AND IRRIGATION LINES BEFORE DIGGING.
7. GROUNDCOVERS ARE TO EXTEND UNDER TREE AND SHRUB PLANTINGS FOR FULL COVERAGE. SPACE GROUNDCOVER 18" AWAY FROM TREES AND 12" AWAY FROM SHRUBS.
8. ALL PLANTING AREAS, PLANTERS, AND POTS TO RECEIVE 3" OF MULCH, SEE SPECS.
9. SEE SHEET L-600 FOR SHADE CALCULATIONS.

TREES

SYM.	QTY.	ABBR.	SCIENTIFIC NAME	COMMON NAME	CONTAINER SIZE	HEIGHT	WIDTH	SPACING	WATER USE	NOTES
	5	TRI LAU	TRISTANIOPSIS LAURINA	WATER GUM	36" BOX	10'-25'	15'	PER PLAN	MODERATE	
	9	ULM PAR	ULMUS PARVIFOLIA	CHINESE EVERGREEN ELM	36"BOX	40'-50'	35'-50'	PER PLAN	MODERATE	

SHRUBS AND GROUND COVER

SYM.	QTY.	ABBR.	SCIENTIFIC NAME	COMMON NAME	CONTAINER SIZE	HEIGHT	WIDTH	SPACING	WATER USE	NOTES
	47	FES MAI	FESTUCA MAIREI	ATLAS FESCUE	5 GAL	1.3'-4'	3'-0"	PER PLAN	LOW	
	28	FRA MOU	FRANGULA 'MOUND SAN BRUNO'	MOUND SAN BRUNO COFFEEBERRY	5 GAL	4'-6'	4'-6'	PER PLAN	LOW	CA NATIVE
	84	GRE NOE	GREVILLEA NOELLII	NOEL'S GREVILLEA	5 GAL	4'	4-5'	PER PLAN	LOW	
	90	LEY CON	LEYMUS CONDENSATUS 'CANYON PRINCE'	LYME GRASS	5 GAL	2'-3'	4'-6'	PER PLAN	LOW	CA NATIVE
	106	PIT TOB	PITTOSPORUM TOBIRA 'CREAM DE MINT'	CREAM DE MINT DWARF PITTOSPORUM	5 GAL	24"-30"	24"-30"	PER PLAN	MODERATE	
	69	RIB VIB	RIBES VIBURNIFOLIUM	CATALINA PERFUME	5 GAL	2'-3'	8'	PER PLAN	LOW	CA NATIVE
	27	RUB ROL	RUBUS ROLFEI	BRAMBLE	5 GAL	4"	2'	PER PLAN	LOW	
	MULCH AT (E) OAK TREE, SEE SPECS.									

AGENCY APPROVAL STAMP:

IDENTIFICATION STAMP
DIV. OF THE STATE ARCHITECT
APP: 01-120890 INC:
REVIEWED FOR
SS ☑ FLS ☑ ACS ☑
DATE: 10/25/2023

TLCDARCHITECTURE
520 Third St. #250
Santa Rosa, CA 95401
o: 707.525.5600
f: 707.525.5616
tlcd.com

CONSULTANT:

rhaa
Landscape Architecture & Planning
225 Miller Avenue, Mill Valley, CA 94941
T 415 383 7900 rhaa.com

STAMP:

LICENSED LANDSCAPE ARCHITECT
Barbara D. Lindburg License
Signature 08/04/2024
Renewal Date 08/30/2023
Date
STATE OF CALIFORNIA

REVISIONS:

Number	Date	Description

NAPA VALLEY COLLEGE WINE EDUCATION CENTER
2277 NAPA VALLEJO HWY
NAPA, CA 94558

NAPA VALLEY COLLEGE

DSA APPLICATION NUMBER:
01-120890

TLCD PROJECT NUMBER:
21062.00

DATE:
08/30/2023

PLANTING NOTES AND LEGENDS

L-500

© THESE DRAWINGS ARE INSTRUMENTS OF SERVICE AND ARE THE SOLE PROPERTY OF TLCD ARCHITECTURE. ANY USE WITHOUT WRITTEN CONSENT IS PROHIBITED.

6/3/2022 10:51:11 AM

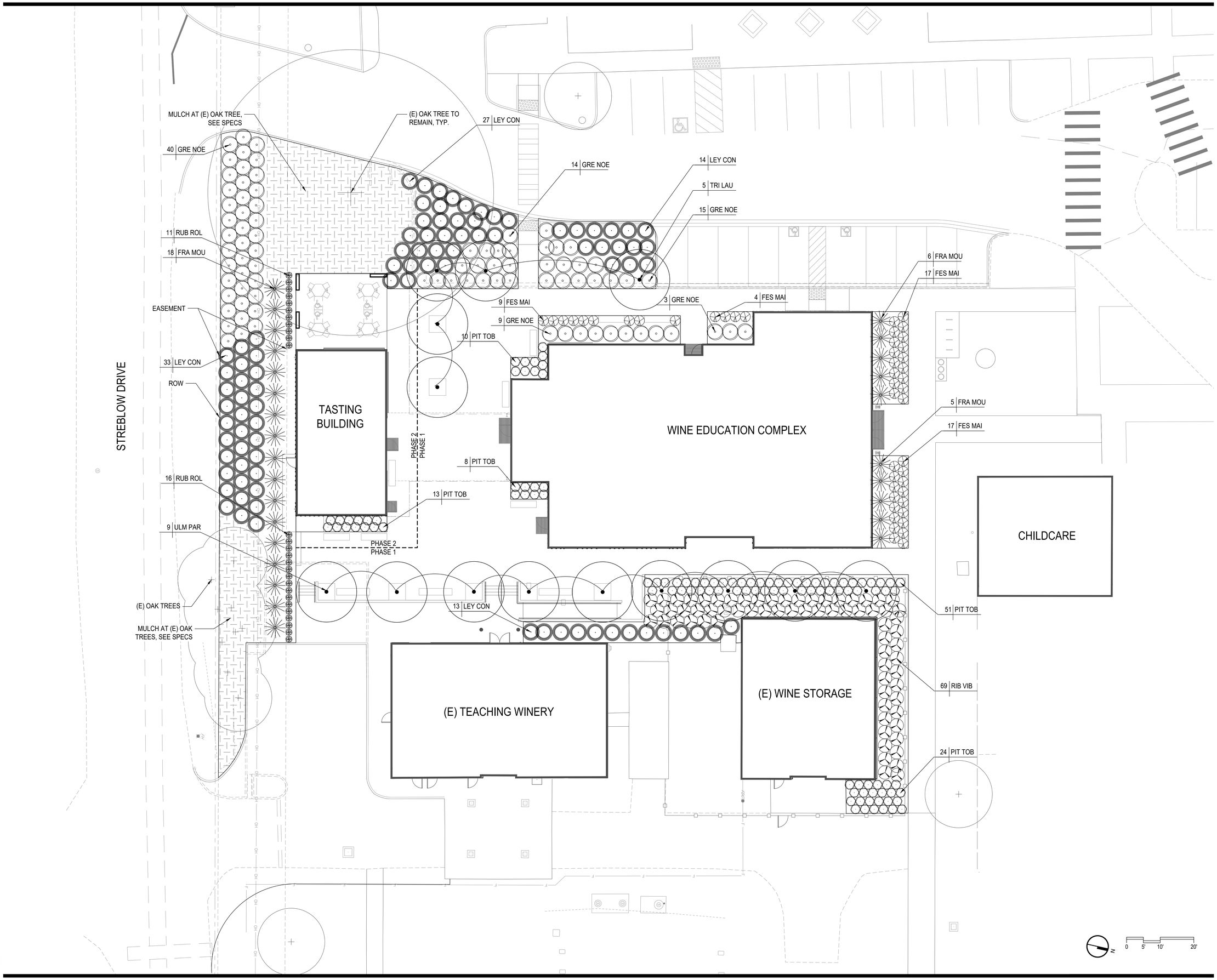

6/2/2022 10:51:11 AM

AGENCY APPROVAL STAMP:

IDENTIFICATION STAMP
DIV. OF THE STATE ARCHITECT
APP: 01-120890 INC:
REVIEWED FOR
SS ☑ FLS ☑ ACS ☑
DATE: 10/25/2023

TLCDARCHITECTURE
520 Third St. #250
Santa Rosa, CA 95401
o: 707.525.5600
f: 707.525.5616
tlcd.com

CONSULTANT:

rhaa
Landscape Architecture & Planning
225 Miller Avenue, Mill Valley, CA 94941
T 415 383 7900 rhaa.com

STAMP:

LICENSED LANDSCAPE ARCHITECT
No. 5022 Lindburg Lisa
Signature
08/04/2024
Renewal Date
08/30/2023
Date
STATE OF CALIFORNIA

REVISIONS:

Number	Date	Description

NAPA VALLEY COLLEGE WINE EDUCATION CENTER

2277 NAPA VALLEJO HWY
NAPA, CA 94558

NAPA VALLEY COLLEGE

DSA APPLICATION NUMBER:
01-120890

TLCD PROJECT NUMBER:
21062.00

DATE:
08/30/2023

PLANTING PLAN

L-501

© THESE DRAWINGS ARE INSTRUMENTS OF SERVICE AND ARE THE SOLE PROPERTY OF TLCD ARCHITECTURE. ANY USE WITHOUT WRITTEN CONSENT IS PROHIBITED.

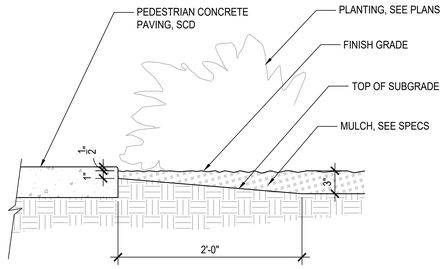

6 MULCH AT CONCRETE PAVING
SCALE: 1-1/2" = 1'-0"

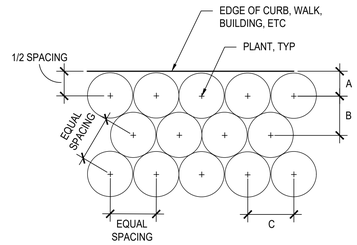

NOTES:
1. SEE PLANTING PLAN FOR SPACING BY PLANT SPECIES.
2. INSTALL TRIANGULATED PLANT LAYOUT, UNLESS OTHERWISE SHOWN ON PLANS.

PLANT SPACING	A	B	C
12"	6"	10"	12"
1'-6"	9"	1'-4"	1'-6"
2'-0"	12"	1'-9"	2'-0"
2'-6"	1'-3"	2'-2"	2'-6"
3'-0"	1'-6"	2'-7"	3'-0"
3'-6"	1'-9"	3'-0"	3'-6"
4'-0"	2'-0"	3'-6"	4'-0"
4'-6"	2'-3"	3'-11"	4'-6"
5'-0"	2'-6"	4'-4"	5'-0"

3 PLANTING LAYOUT
NTS

NOTES:
1. EXCAVATE SQUARE TREE PITS. SCARIFY SIDES AND BOTTOM.
2. FOOT TAMP PLANITNG SOIL IN 6" LIFTS TO STABALIZE TREE.
3. SEE SPECS FOR MORE INFORMATION REGARDING PLANT INSTALLATION AND SOIL PREPARATION.

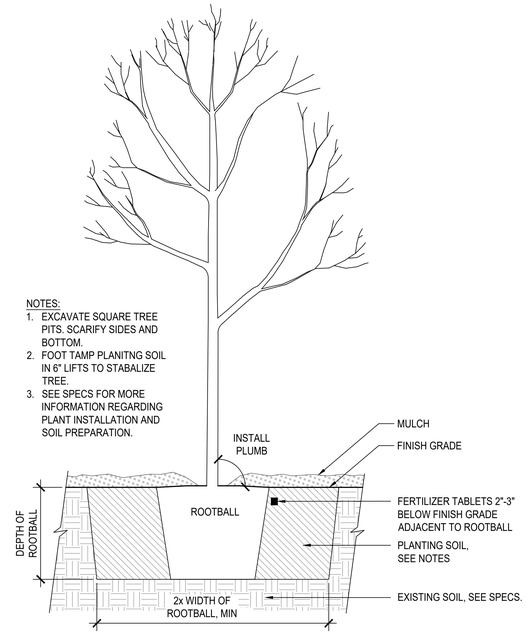

1 TREE PLANTING
NTS

NOTE:
1. SEE SPECS FOR MORE INFORMATION REGARDING PLANT INSTALLATION AND SOIL PREPARATION.

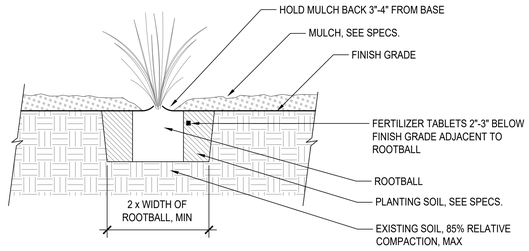

7 ORNAMENTAL GRASS PLANTING
SCALE: 1" = 1'-0"

NOTE:
1. SEE SPECS. FOR MORE INFORMATION REGARDING PLANT INSTALLATION AND SOIL PREPARATION.

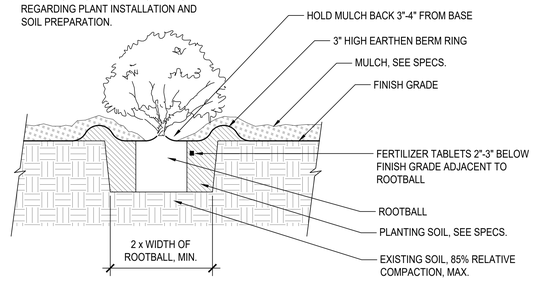

4 SHRUB PLANTING W/ BERM
SCALE: 1" = 1'-0"

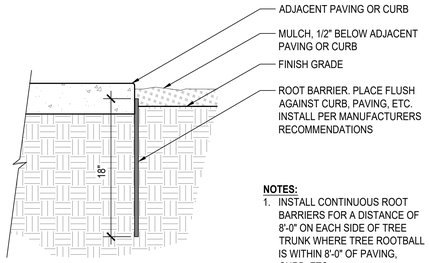

NOTES:
1. INSTALL CONTINUOUS ROOT BARRIERS FOR A DISTANCE OF 8'-0" ON EACH SIDE OF TREE TRUNK WHERE TREE ROOTBALL IS WITHIN 8'-0" OF PAVING, CURB, ETC.

8 ROOT BARRIER
SCALE: 1-1/2" = 1'-0"

NOTES:
1. EXCAVATE SQUARE TREE PITS. SCARIFY SIDES AND BOTTOM.
2. FOOT TAMP PLANTING SOIL IN 6" LIFTS TO STABILIZE TREE.
3. SEE SPECS FOR MORE INFORMATION REGARDING PLANT INSTALLATION AND SOIL PREPARATION.
4. SEE CIVIL FOR SUBGRADE PREPARATION AND DRAINAGE PLAN.
5. DO NOT ROTOTILL, RIP, RAISE, OR LOWER GRADE WITHIN THE DRIPLINE OF PROTECTED TREES UNLESS DIRECTED BY THE PROJECT ARBORIST.

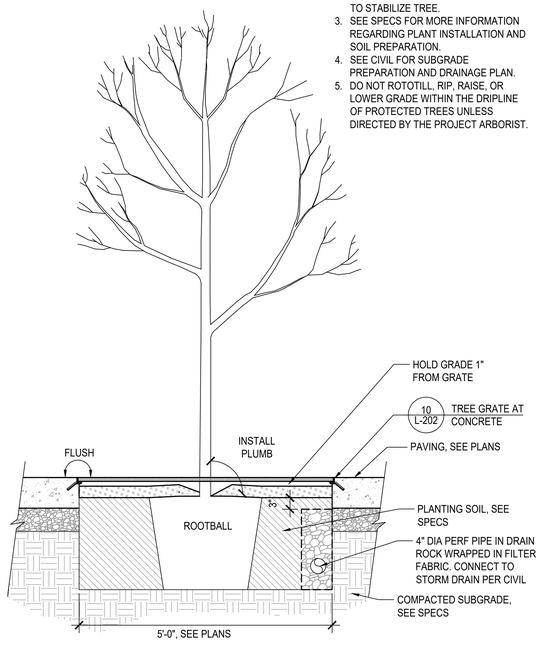

5 TREE WELL W/ TREE GRATE
SCALE: 3/4" = 1'-0"

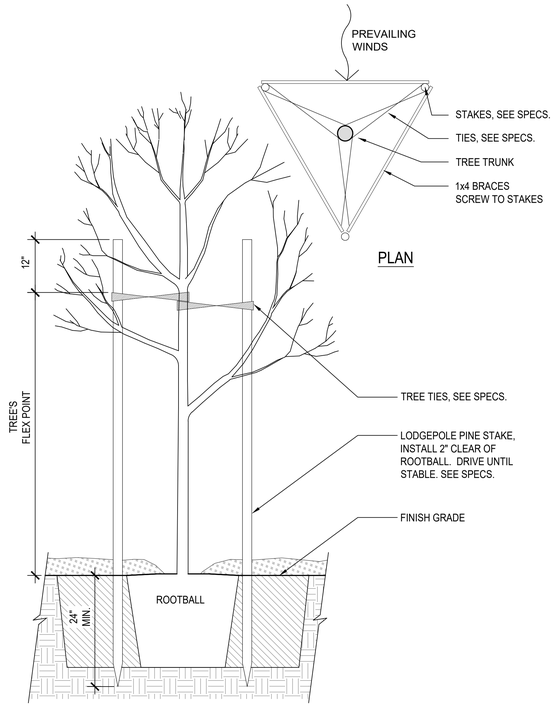

2 TREE STAKING
SCALE: 3/4" = 1'-0"

AGENCY APPROVAL STAMP:

IDENTIFICATION STAMP
DIV. OF THE STATE ARCHITECT
APP: 01-120890 INC:
REVIEWED FOR
SS ☑ FLS ☑ ACS ☑
DATE: 10/25/2023

TLCDARCHITECTURE
520 Third St. #250
Santa Rosa, CA 95401
o: 707.525.5600
f: 707.525.5616
tlcd.com

CONSULTANT:
rhaa
Landscape Architecture & Planning
225 Miller Avenue, Mill Valley, CA 94941
T 415 383 7900 rhaa.com

STAMP:

REVISIONS:

Number	Date	Description

NAPA VALLEY COLLEGE WINE EDUCATION CENTER
2277 NAPA VALLEJO HWY
NAPA, CA 94558

NAPA VALLEY COLLEGE

DSA APPLICATION NUMBER:
01-120890

TLCD PROJECT NUMBER:
21062.00

DATE:
08/30/2023

PLANTING DETAILS

L-502

© THESE DRAWINGS ARE INSTRUMENTS OF SERVICE AND ARE THE SOLE PROPERTY OF TLCD ARCHITECTURE. ANY USE WITHOUT WRITTEN CONSENT IS PROHIBITED.

6/2/2022 10:51:11 AM

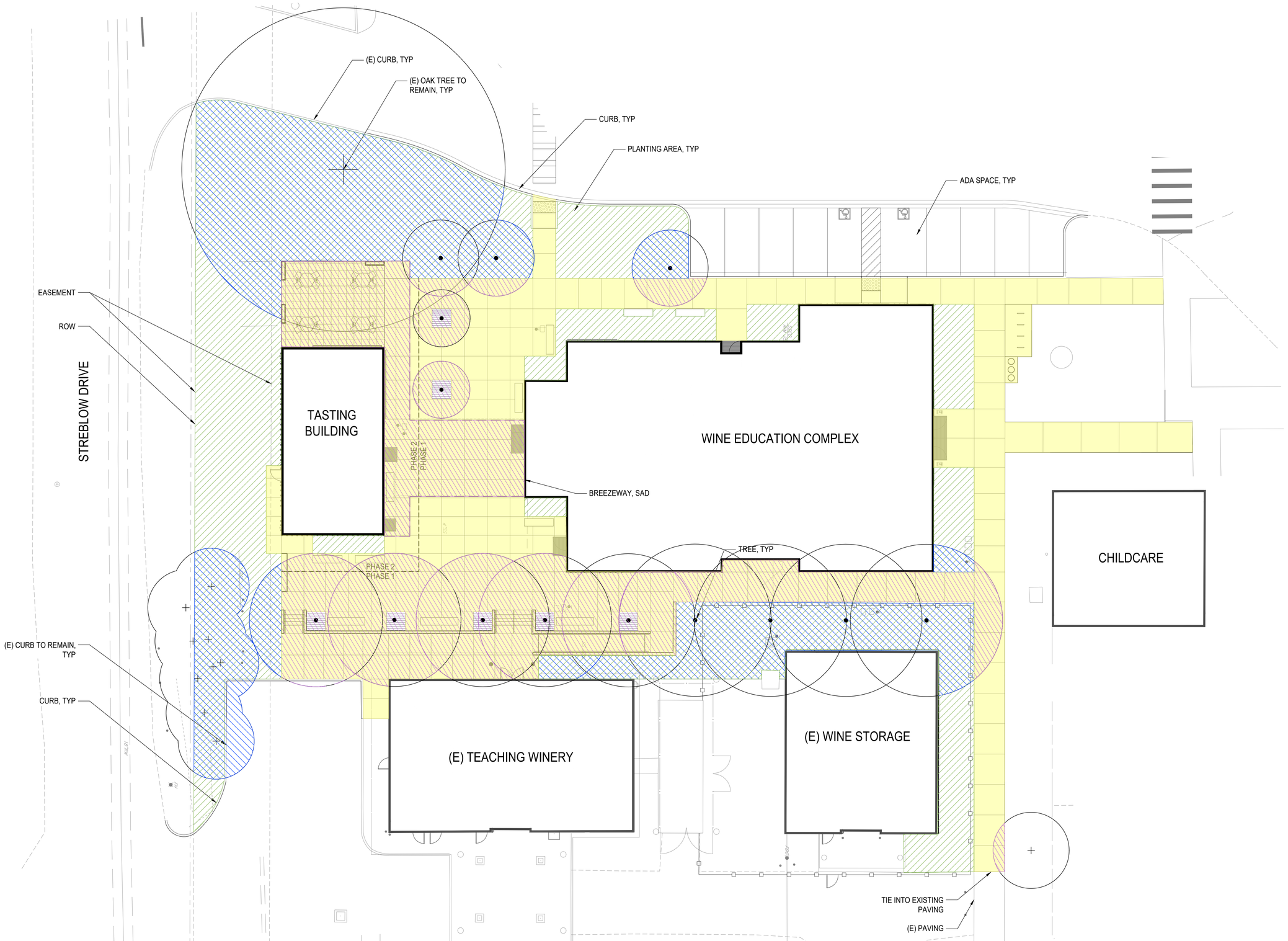

HATCH	TYPE	AREA TOTAL	AREA SHADE	AREA SHADE PERCENTAGE
	HARDSCAPE	10,576 SQ. FT.	--	--
	LANDSCAPE	9,673 SQ. FT.	--	--
	SHADED HARDSCAPE	--	6,113 SQ. FT.	57.80%
	SHADED LANDSCAPE	--	5,819 SQ. FT.	60.15%

N

0 5' 10' 20'

AGENCY APPROVAL STAMP:

IDENTIFICATION STAMP
DIV. OF THE STATE ARCHITECT
APP: 01-120890 INC:
REVIEWED FOR
SS ☑ FLS ☑ ACS ☑
DATE: 10/25/2023

TLCDARCHITECTURE
520 Third St. #250
Santa Rosa, CA 95401
o: 707.525.5600
f: 707.525.5616
tlcd.com

CONSULTANT:

rhaa
Landscape Architecture & Planning
225 Miller Avenue, Mill Valley, CA 94941
T 415 383 7900 rhaa.com

STAMP:

LICENSED LANDSCAPE ARCHITECT
Barbara D. Lindburg License No. 4000
Signature 08/24/2024
Renewal Date 08/30/2023
Date
STATE OF CALIFORNIA

REVISIONS:

Number	Date	Description

NAPA VALLEY COLLEGE WINE EDUCATION CENTER

2277 NAPA VALLEJO HWY
NAPA, CA 94558

NAPA VALLEY COLLEGE

DSA APPLICATION NUMBER:
01-120890

TLCD PROJECT NUMBER:
21062.00

DATE:
08/30/2023

SHADE STUDY PLAN

L-600

© THESE DRAWINGS ARE INSTRUMENTS OF SERVICE AND ARE THE SOLE PROPERTY OF TLCD ARCHITECTURE. ANY USE WITHOUT WRITTEN CONSENT IS PROHIBITED.

6/3/2022 10:51:11 AM

10/10/2023 11:52:03 AM C:\revit_local\22072_NVC_S23C_jacktH6UJH.rvt

J MATERIAL DATA

(INFORMATION SHOWN IS FOR STRUCTURAL DESIGN REFERENCE ONLY. SEE THE PROJECT SPECIFICATIONS FOR ALL MATERIAL SPECIFICATIONS.)

CONCRETE 28-DAY MINIMUM DESIGN STRENGTH:
- F'_c = 3,000 PSI FOUNDATIONS
- F'_c = 3,000 PSI INTERIOR SLAB ON GRADE

REINFORCING STEEL:
- ASTM A615 GRADE 60 OR A706 GRADE 60 (F_y = 60,000 PSI)

STRUCTURAL STEEL (UNO):
- W SHAPES - ASTM A992 OR ASTM A572 (Fy = 50,000 PSI)
- ANGLES, CHANNELS, AND PLATES - ASTM A36 OR ASTM A572 (Fy = 36,000 PSI)
- RECTANGULAR HSS - ASTM A500 GRADE C (Fy = 50,000 PSI)
- MOMENT FRAME PLATES - ASTM A572 GRADE (Fy = 50,000 PSI)

FASTENERS:
- MACHINE/CARRIAGE BOLTS SHALL BE ASTM A307 GRADE A
- HIGH STRENGTH BOLTS SHALL BE ASTM F3125 GRADE A325 OR A490 OR F1852 UNO
- ANCHOR RODS & THREADED RODS SHALL BE ASTM F1554 GR 36 UNO
- ARC-WELDING ELECTRODES SHALL BE E70
- WELDED HEADED/THREADED STUDS - ASTM A108 (Fy = 51,000 PSI)
- POWER ACTUATED FASTENERS (PAF) - HILTI X-CP72 (ICC ESR-2379) OR SIMPSON PDPWAL-300 MG (ICC ESR-2138)

WOOD BASE DESIGN STRESSES (UNO):

SAWN LUMBER MEMBER	SPECIES AND MINIMUM GRADE, UNO	F_b (PSI)	F_v (PSI)	E (PSI)
6x POSTS	DOUGLAS FIR - #1	1200	170	$1.6x10^6$
6x BEAMS	DOUGLAS FIR - #1	1350	170	$1.6x10^6$
4x POSTS & BEAMS	DOUGLAS FIR - #1	1000	180	$1.7x10^6$
2x JOISTS, RAFTERS	DOUGLAS FIR - #1	1000	180	$1.7x10^6$
⅊ MATERIAL, BLOCKING	DOUGLAS FIR - #1	1000	180	$1.7x10^6$
2x STUDS	DOUGLAS FIR - #1	1000	180	$1.7x10^6$

MANUFACTURED WOOD PRODUCTS:
- LVL (JOISTS, STUDS) F_b = 2,600 PSI E = $2.0x10^6$ PSI
- LSL (BLOCKING & LEDGERS AT IJ FRMG) F_b = 1,700 PSI E = $1.3x10^6$ PSI

FOR METAL CONNECTOR DESIGNATION REFER TO SIMPSON STRONG-TIE PER SPECIFICATIONS.

ABBREVIATIONS

AB	ANCHOR BOLT
ABV	ABOVE
AC	AIR CONDITIONING
ADJ	ADJACENT
ADDL	ADDITIONAL
ALT	ALTERNATE
ALUM	ALUMINUM
ARCH	ARCHITECT
AYC	ALASKAN YELLOW CEDAR
@	AT
BF	BRACED FRAME
BLDG	BUILDING
BLK/BLKG	BLOCK/BLOCKING
BLW	BELOW
BM	BEAM
BN	BOUNDARY NAIL
BOT	BOTTOM
BRG	BEARING
BTWN	BETWEEN
BU	BUILT-UP
BYND	BEYOND
C	AMERICAN STANDARD CHANNEL
CA	CALIFORNIA
CANT	CANTILEVER
CB	CARRIAGE BOLT
CFS	COLD FORMED STEEL
CIP	CAST IN PLACE
CGL	CERTIFIED GLUED LUMBER
CJ	CONTROL JOINT
℄	CENTERLINE
CJP	COMPLETE JOINT PENETRATION
CLG	CEILING
CLR	CLEAR
COL	COLUMN
CONC	CONCRETE
CONN	CONNECTION
CONT	CONTINUOUS
COORD	COORDINATE/ COORDINATION
CMU	CONCRETE MASONRY UNIT
CSK	COUNTERSINK
CW	CUT WASHER
DBA	DEFORMED BAR ANCHOR
DBL	DOUBLE
DCW	DEMAND CRITICAL WELD
DF	DOUGLAS FIR
DIA or Ø	DIAMETER
DIAG	DIAGONAL
DIM	DIMENSION
DIST	DISTANCE
DJ	DOWEL JOINT
DL	DEAD LOAD
DN	DOWN
DO	DITTO
DWG	DRAWING
DWL	DOWEL
EA	EACH
EE	EACH END
EF	EACH FACE
ELEC	ELECTRICAL
ELEV	ELEVATOR/ELEVATION
EMBED	EMBEDMENT
EQ	EQUAL
EQUIP	EQUIPMENT
ES	EACH SIDE
EW	EACH WAY
(E)	EXISTING
EXP	EXPANSION
EXT	EXTERIOR
FDN	FOUNDATION
FIN	FINISH
FG	FINISH GRADE
FLR	FLOOR
FN	FACE NAIL
FOC	FACE OF CONCRETE
FOM	FACE OF MASONRY
FOS	FACE OF STUD
FRMG	FRAMING
FS	FAR SIDE

FTG	FOOTING
GA	GAGE or GAUGE
GALV	GALVANIZED
GB	GRADE BEAM
GL	GRIDLINE
GLB	GLUE LAMINATED BEAM
GR	GRADE
HD	HOLD DOWN
HDG	HOT-DIP GALVANIZED
HDR	HEADER
HGR	HANGER
HK	HOOK
HORIZ	HORIZONTAL
HSB	HIGH STRENGTH BOLT
HSG	HIGH STRENGTH GROUT
HSH	HORIZONTAL SLOTTED HOLE
HSS	HOLLOW STRUCTURAL SECTION
HT	HEIGHT
ID	INSIDE DIAMETER
IJ	I SHAPED WOOD BUILT UP TRUSS
INT	INTERIOR
JST	JOIST
JT	JOINT
KP	KING POST
L	STEEL ANGLE
Lb or #	POUND(s)
LGMF	LIGHT GAGE METAL FRAMING
LGMFC	LIGHT GAGE METAL FRAMING CONTRACTOR
LL	LIVE LOAD
LLH	LONG LEG HORIZONTAL
LLV	LONG LEG VERTICAL
LOC	LOCATION
LS	LAG SCREW
LSL	LAMINATED STRAND LUMBER
LVL	LAMINATED VENEER LUMBER
LWC	LIGHTWEIGHT CONCRETE
MAX	MAXIMUM
MB	MACHINE BOLT
MBM	METAL BUILDING MANUFACTURER
MC	MISCELLANEOUS CHANNEL
MECH	MECHANICAL
MEZZ	MEZZANINE
MF	MOMENT FRAME
MFR	MANUFACTURER
MIN	MINIMUM
MISC	MISCELLANEOUS
MIW	MALLEABLE IRON WASHER
MTL	METAL
MU	MECH UNIT
(N)	NEW
N/A	NOT APPLICABLE
NO or #	NUMBER
NS	NEAR SIDE
NSG	NON-SHRINK GROUT
NTS	NOT TO SCALE
NWC	NORMAL-WEIGHT CONCRETE
O/	OVER
oc	ON CENTER
OD	OUTSIDE DIAMETER
OH	OPPOSITE HAND
OPNG	OPENING
OPP	OPPOSITE
OVS	OVERSIZED
OW	OTHERWISE
OWT	OPEN WEB TRUSS
⅊	PLATE or PROPERTY LINE
PA	POST ABOVE
PAF	POWER ACTUATED FASTENERS
PEN	PANEL EDGE NAIL
PERP	PERPENDICULAR
PES	PANEL EDGE SCREWS
PJP	PARTIAL JOINT PENETRATION
PLF	POUNDS PER LINEAR FOOT

PNL	PANEL
PSF	POUNDS PER SQUARE FOOT
PSI	POUNDS PER SQUARE INCH
PSL	PARALLEL STRAND LUMBER
PTDF	PRESSURE TREATED DOUGLAS FIR
PT	POINT
R	RADIUS
RBS	REDUCED BEAM SECTION
RFTR	RAFTER
REF	REFERENCE
REINF	REINFORCING
REQD	REQUIRED
RET	RETAINING
REV	REVISION
RF	ROOF
RWD	REDWOOD
S	AMERICAN STANDARD BEAM
SAD	SEE ARCHITECTURAL DRAWINGS
SB	SOLID BLOCK
SC	SLIP CRITICAL
SCD	SEE CIVIL DRAWINGS
SCHED	SCHEDULE
SED	SEE ELECTRICAL DRAWINGS
SEOR	STRUCTURAL ENGINEER OF RECORD
SFRS	SEISMIC FORCE RESISTING SYSTEM
SHTG	SHEATHING
SIM	SIMILAR
SKYLT	SKYLIGHT
SLD	SEE LANDSCAPE DRAWINGS
SMS	SHEET METAL SCREW
SMD	SEE MECHANICAL DRAWINGS
SOG	SLAB ON GRADE
SPCG	SPACING
SPD	SEE PLUMBING DRAWINGS
SPEC	SPECIFICATION
SQ	SQUARE
SS	SELECT STRUCTURAL or STAINLESS STEEL
STGR	STAGGERED
STD	STANDARD
STIFF	STIFFENER
STL	STEEL
STRUCT	STRUCTURAL
SW	SHEAR WALL
SYM	SYMMETRICAL
T&B	TOP AND BOTTOM
T&G	TONGUE AND GROOVE
THK	THICK
THRD	THREADED
THRU	THROUGH
TL	TOTAL LOAD
TN	TOE NAIL
TOC	TOP OF CONCRETE
TOF	TOP OF FRAMING
TOM	TOP OF MASONRY
TOP	TOP OF PLYWOOD
TOS	TOP OF STEEL
TOT	TOTAL
TU	TILT UP
TYP	TYPICAL
UNO	UNLESS NOTED OTHERWISE
VERT	VERTICAL
VIF	VERIFY IN FIELD
VSH	VERTICAL SLOTTED HOLE
W	WIDE FLANGE STEEL BEAM
W/	WITH
W/O	WITHOUT
WD	WOOD
WHS	WELDED HEADED STUD
WLD	WELDED
WP	WORK POINT/WATERPROOF
WS	WOOD SCREW
WT	WEIGHT
WTS	WELDED THREADED STUD
WWR	WELDED WIRE REINFORCEMENT

E SHEAR WALL NOTES

1. PEN = PLYWOOD/OSB SHEATHING EDGE NAILING. BLOCK ALL UNSUPPORTED EDGES WITH 2x MATERIAL UNO. BLOCK EDGES WITH 3x MATERIAL WHERE NAILING IS 4"oc OR LESS. SEE 11/S-102 FOR NAIL STAGGER AT ALL 3x.
2. FIELD NAILING TO BE 12"oc UNO.
3. ALL SHEATHING NAILS TO BE COMMON WIRE. SEE D/S-001 AND SPECIFICATIONS FOR OTHER NAIL REQUIREMENTS.
4. ALL EXTERIOR WALLS NOT DESIGNATED AS SHEAR WALLS ON PLANS TO HAVE SHEATHING AND PEN NAILING PER SHEAR WALL TYPE 'A'.
5. SHEAR WALL LENGTHS, WHERE NOTED, ARE MINIMUM. DO NOT LOCATE HOLDOWNS FROM THESE DIMENSIONS. SAD FOR ACTUAL WALL LENGTHS.
6. HOLDOWN REFERS TO SIMPSON STRONG TIE CO. HOLDOWNS. INSTALL HOLDOWNS AND REQUIRED POSTS PER 8/S-102 AND 9/S-102. SEE PLANS FOR OTHER REQUIREMENTS.
7. EDGE NAIL WALL SHEATHING TO STUDS OR POSTS WITH HOLDOWNS.
8. PORTIONS OF INTERIOR WALL SURFACES ADJACENT TO SPECIFIED SHEAR WALLS SHALL BE SHEATHED FOR THE FULL, UNINTERRUPTED LENGTH TO MATCH EXTERIOR WALLS OR WITH GYPSUM BOARD OF THE SAME THICKNESS TO PROVIDE AN EVEN WALL SURFACE FOR FINISH MATERIALS.
9. SHEAR WALLS MORE THAN ONE VERTICAL PANEL IN HEIGHT SHALL HAVE STAGGERED HORIZONTAL OR VERTICAL SPLICE JOINTS.
10. WHERE PANELS ARE APPLIED ON BOTH FACES OF A WALL AND NAIL SPACING IS LESS THAN 6"oc ON EITHER SIDE, PANEL JOINTS SHALL BE OFFSET TO FALL ON DIFFERENT FRAMING MEMBERS OR FRAMING SHALL BE 3x OR THICKER AND NAILS ON EACH SIDE SHALL BE STAGGERED.
11. ANCHOR BOLTS (AB) FOR SHEAR WALLS SHALL INCLUDE STEEL PLATE WASHERS, A MINIMUM OF 0.229 INCH BY 3 INCHES SQUARE IN SIZE, BETWEEN THE SILL PLATE AND NUT. THE HOLE IN THE PLATE WASHER IS PERMITTED TO BE DIAGONALLY SLOTTED WITH A WIDTH OF UP TO 3/16" LARGER THAN THE AB DIAMETER AND A SLOT LENGTH NOT TO EXCEED 1¾", PROVIDED A STANDARD CUT WASHER IS PLACED BETWEEN THE PLATE WASHER AND THE NUT. PLATE WASHER TO EXTEND WITHIN ½" OF SHEAR WALL SHEATHING UNO. PROVIDE OVERSIZED PLATE WASHER OR OFFSET AB AS REQUIRED. AT DOUBLE-SIDED SHEAR WALLS, STAGGER AB AS REQUIRED. AB TO BE PLACED A MINIMUM OF 4½" AND A MAXIMUM OF 12" FROM ENDS OF ALL SILL PLATES AND AT NOTCHES IN SILL PLATES.
12. NO OPENINGS ARE ALLOWED IN SHEAR WALLS UNLESS SHOWN ON THE STRUCTURAL PLANS. OPENINGS NOTED ARE PER 6/S-102. COORDINATE ANY OPENINGS NOT SHOWN WITH THE STRUCTURAL ENGINEER.

SHEAR WALL SCHEDULE									
SW	APA RATED SHEATHING	NAILING (PEN)	ANCHORAGE: ⅝"Ø BOLT FDN		ANCHORAGE: AT FRAMING			REMARKS
			2x SILL	3x SILL	16d	A35	SDS *	
A	15/32" (32/16) EXP 1	10d @ 6"oc	32"oc	48"oc	6"oc	16"oc	12"oc	
B	15/32" (32/16) EXP 1	10d @ 4"oc	24"oc	32"oc	4"oc	16"oc	8"oc	3x MIN AT ALL ADJOINING PANEL EDGES
C	15/32" (32/16) EXP 1	10d @ 3"oc	16"oc	24"oc	3"oc	8"oc	8"oc	
D	15/32" (32/16) EXP 1 BOTH SIDES	10d @ 3"oc	-	12"oc	(2) ROWS @ 2"oc	EA SIDE @ 8"oc, STGR	(2) ROWS @ 6"oc	

* 2x SILL: SDS¼x4½". 3x SILL: SDS¼x6". FOR SDS @ 6"oc OR LESS, PROVIDE 4x BLKG BLW.

F STEEL NOTES

1. COORDINATE TOP OF FOOTING ELEVATIONS AS DETERMINED BY THE CONTRACTOR PER C/S-001.
2. TOP OF STEEL ELEVATIONS ARE TO BE DETERMINED BY THE CONTRACTOR BASED ON ARCHITECTURAL DRAWINGS AND STRUCTURAL DRAWINGS.
3. ALL FRAMING AND CONNECTIONS ALONG GRID LINES OR OTHERWISE INDICATED AS (SFRS) ARE PART OF THE SEISMIC FORCE RESISTING SYSTEM. TESTING AND INSPECTION OF FRAMING AND CONNECTIONS INDICATED AS SFRS SHALL MEET ALL REQUIREMENTS OF AISC 341 AND AWS D1.8. SEE SPECIFICATIONS FOR ADDITIONAL REQUIREMENTS.
4. ALL BOLTS THAT ARE A PART OF THE SFRS ARE TO BE SLIP CRITICAL WITH CLASS A FAYING SURFACE PREPARATION, UNO.
5. DEMAND CRITICAL WELDS ARE AS INDICATED ON PLANS. TESTING AND INSPECTION OF DEMAND CRITICAL WELDS ARE TO MEET ALL REQUIREMENTS OF AISC 341, AWS D1.1, AND AWS D1.8. SEE SPECIFICATIONS FOR ADDITIONAL REQUIREMENTS.

G MANUFACTURED I-JOIST NOTES

1. IJ = BUILT-UP "I" SHAPED WOOD JOIST WITH PLYWOOD OR OSB WEB. SEE PROJECT SPECIFICATIONS FOR ADDITIONAL INFORMATION.
2. JOISTS ARE PER PLAN. PROVIDE "IUS" HANGERS AT ROOF FRAMING UNLESS NOTED OTHERWISE. HANGER SIZE TO BE CORRECT FULL SIZE FOR JOIST SIZE WITH 'MAX' NAILING UNLESS NOTED OTHERWISE.
3. ALTERNATE FRAMING CAN BE SUBMITTED FOR SUBSTITUTION REVIEW AS AN EXTRA SERVICES ITEM. CONTRACTOR SHALL BE RESPONSIBLE FOR COST OF INVESTIGATING AND REVIEWING THE ADEQUACY AND/OR ACCEPTABILITY OF SUCH SUBSTITUTION, INCLUDING ANY REQUIRED REVISIONS TO DRAWINGS AND SPECIFICATIONS.
4. IJ SHALL BE INSTALLED PER MANUFACTURER'S SPECIFICATIONS. WEB STIFFENERS AND WEB FILLERS SHALL BE INSTALLED PER IJ AND JOIST HANGER MANUFACTURER'S REQUIREMENTS AND 4/S-103.
5. NO MODIFICATIONS ARE PERMITTED TO I-JOIST TOP AND BOTTOM CHORDS, DO NOT CUT. OPENINGS THROUGH I-JOIST WEBS ARE PERMITTED AS INDICATED PER 2/S-103.
6. BLOCKING AT I-JOIST SHALL BE INSTALLED PER 3/S-103.
7. AT ROOF IJ PROVIDE BRIDGING (OR FULL DEPTH BLOCKING) AT 8'-0"oc MAX AND WITHIN 12" OF HANGER EACH END. SEE BRIDGING DETAIL 2/S-103.

I - JOIST SCHEDULE		
TYPE	MANUFACTURER & MODEL	CODE REPORT NUMBER
IJ9.5	BOISE CASCADE BCI 6000-1.8	ICC ESR - 1336
	LOUISIANA PACIFIC LPI 42 PLUS	ICC ESR - 1305
	WEYERHAEUSER TJI 210	ICC ESR - 1153

H ENGINEERED LUMBER STUD WALL NOTES

1. BASIS OF DESIGN IS REDBUILT LVL PER ICC ESR-2993 OR TRUS JOIST LVL PER ICC ESR-1387.
2. NAIL SPACING SHALL NOT BE LESS THAN MINIMUM PER MANUFACTURER. SEE 11/S-102 FOR PANEL EDGE NAILING.
3. JAMB STUDS SHALL MATCH TYPICAL LVL STUDS. SILLS, HEADERS, AND TRIM STUDS MAY BE EITHER LVL OR SAWN LUMBER. TOP PLATES SHALL BE SAWN LUMBER.

C FOUNDATION NOTES

1. ALLOWABLE (ASD) FOUNDATION DESIGN PRESSURES ARE:

   SHALLOW FOOTINGS:
   DEAD LOAD + LIVE LOAD = 2,000 PSF
   DEAD LOAD + LIVE LOAD + LATERAL = 2,667 PSF

2. ALL SOILS WORK SHALL BE DONE IN ACCORDANCE WITH THE SPECIFICATIONS, THE REQUIREMENTS OF THE GEOTECHNICAL REPORT NOTED BELOW AND CHAPTER 18A OF THE CBC, TITLE 24, PART 2. ALL FOUNDATIONS SHALL BEAR ON FIRM, UNDISTURBED, NATIVE SOILS OR ENGINEERED FILL AT OR EXCEEDING DEPTHS SHOWN ON THE DRAWINGS. ENGINEERED FILL TO BE COMPACTED PER GEOTECHNICAL REPORT. INCREASE FILL AND OR FOOTING DEPTH AS REQUIRED BY GEOTECHNICAL ENGINEER. ALL FOOTING EXCAVATIONS SHALL BE AS NEAT AS PRACTICABLE. MAXIMUM OVER EXCAVATION IN WIDTH SHALL BE LESS THAN 12 INCHES OR 25% OF FOOTING WIDTH, WHICH EVER IS LESS. 6 INCHES MAXIMUM PER SIDE. LARGER OVER-EXCAVATIONS IN WIDTH SHALL BE FILLED WITH ADDITIONAL REINFORCED CONCRETE AS DIRECTED BY THE ENGINEER, OR FORMWORK SHALL BE PROVIDED. OVER-EXCAVATIONS IN DEPTH MAY BE FILLED WITH LEAN CONCRETE OR COMPACTED APPROVED BACKFILL. ALL LOOSE SOILS SHALL BE REMOVED FROM EXCAVATIONS PRIOR TO PLACEMENT OF REINFORCING OR CONCRETE. ALL UNFORMED FOUNDATIONS SHALL BE EXCAVATED AND FORMED PER 16/S-101. GEOTECHNICAL REPORT BY:

   ALLERION
   GEOLOGICAL HAZARDS STUDY
   DATED: AUGUST 5, 2022

   SIGNET TESTING LABS
   REPORT NO. 2407-40
   DATED: AUGUST 5, 2022

   RESPONSE LETTER: "RESPONSE TO CGS REVIEW"
   DATED: APRIL 11, 2023

   LIQUEFACTION SETTLEMENT: 3.5 INCHES OVER 50 FEET

3. WHERE BOTTOM OF ADJACENT FOOTINGS ARE DIFFERENT PROVIDE STEPPED FOOTING PER 5/S-101.
4. USE 5/8" DIAMETER x 12" (18" AT CURBS) ANCHOR BOLTS (AB) AT 48"oc WHERE NOT OTHERWISE NOTED. MINIMUM EMBEDMENT INTO CONCRETE IS 7" (EXCLUDING CURB) UNLESS DETAILED OTHERWISE. ANCHOR BOLTS ARE TO BE TIED IN PLACE PRIOR TO PLACEMENT OF CONCRETE. SEE SHEAR WALL SCHEDULE FOR ADDITIONAL REQUIREMENTS. MINIMUM TWO ANCHOR BOLTS PER SILL PIECE.
5. TYPICAL SLAB: 5" CONCRETE REINFORCED WITH #4 @ 16"oc EACH WAY LOCATED 1½" CLEAR FROM TOP OF SLAB OVER VAPOR RETARDER (PER SPECIFICATIONS) AND 4" MINIMUM FREE DRAINING COMPACTED ROCK PER SPECIFICATIONS ON SUBGRADE PER THE GEOTECHNICAL RECOMMENDATIONS, AND AS APPROVED BY THE GEOTECHNICAL ENGINEER. DO NOT DRIVE CONCRETE TRUCKS OR LARGE SCREED MACHINES ON VAPOR RETARDER WITHOUT ADDITIONAL BUFFER MATERIAL AND APPROVAL FROM THE STRUCTURAL ENGINEER.
6. REFER TO ARCHITECTURAL AND PLUMBING DRAWINGS FOR DEPRESSED SLABS FOR ARCHITECTURAL FLOORING OR INSERTS, SLOPED SLABS TO DRAIN AND PIPES OR CONDUITS AT SLAB. SEE 8/S-101 AT DEPRESSED SLAB & 7/S-101 FOR PIPES AND CONDUITS.
7. PROVIDE CONTROL JOINTS PER 6/S-101 (OR CONSTRUCTION/DOWEL JOINTS AT CONTRACTOR'S OPTION) AS SHOWN ON PLAN AND AS REQUIRED TO MEET A MAXIMUM SPACING IN FEET OF 3 TIMES THE SLAB DEPTH IN INCHES (FOR EXAMPLE 3x5" = 15'-0"oc MAX). PROVIDE CONSTRUCTION/DOWEL JOINTS PER 6/S-101 AS SHOWN ON PLAN, BUT NOT GREATER THAN 60'-0"oc EACH WAY. INSTALL JOINTS TO DIVIDE SLAB INTO RECTANGULAR AREAS WITH LONG DIMENSION LESS THAN 1.5 x SHORT DIMENSION. INSTALL JOINTS AT FACE OF STUDS OF WALL WHERE POSSIBLE. SUBMIT JOINT LAYOUT PLAN FOR REVIEW PRIOR TO PLACEMENT.
8. TOP OF FOOTING ELEVATIONS TO BE DETERMINED BY THE CONTRACTOR BASED ON INFORMATION FROM THE CIVIL DRAWINGS, GEOTECHNICAL REPORT, LANDSCAPE, ETC.
9. EXTERIOR WALLS TO HAVE MINIMUM 6" TALL CURB, SAD FOR CURB CONFIGURATION. INTERIOR WALLS AT TOILET ROOM TO HAVE MINIMUM 6" TALL CURB, UNO.

D WOOD FRAMING NOTES

1. HEADERS, BEAMS, POSTS, TOP PLATE SPLICES, AND ETC., ARE PER 1/S-102 AND 3/S-102 WHERE NOT NOTED ON PLAN AND DETAILS. WALLS AT SEISMIC SEPARATIONS SHALL BE CONSIDERED EXTERIOR WALLS.
2. ALL BEAMS AND JOISTS (EXCLUDING I JOISTS) SHALL BE SEAT CUT FOR FULL UNIFORM BEARING AT SUPPORTS, INCLUDING BEAM SEATS AND COLUMN CAPS.
3. SEE 11/S-102 FOR SHEATHING NAILING REQUIREMENTS. ALL NAILING NOT NOTED OR DETAILED OTHERWISE SHALL BE PER 10/S-102. NAIL LENGTH PER 11/S-102. NAILS INTO PRESSURE TREATED MATERIAL SHALL BE HOT DIP GALVANIZED. NAILS AT BORATE TREATED LUMBER MAY BE CLEAR ZINC COATED. SEE SPECIFICATIONS FOR ADDITIONAL REQUIREMENTS AT EXTERIOR EXPOSURES.
4. EXTERIOR STUD WALL SHALL BE 2x6 @ 16"oc UNLESS NOTED OTHERWISE. INTERIOR BEARING WALLS AND SHEAR WALLS SHALL BE 2x6 @ 16"oc UNLESS NOTED OTHERWISE. SEE ARCHITECTURAL DRAWINGS FOR OTHER INTERIOR WALL FRAMING SIZES. COORDINATE STUD AND PLATE SIZES WITH THE REQUIREMENTS OF THE SHEAR WALL SCHEDULE. STUDS ADJACENT TO SEISMIC SEPARATIONS ARE TO BE 2x6 @ 16"oc UNLESS NOTED OTHERWISE.
5. WOOD POST SIZES ARE TO MATCH BEAM AND STUD WIDTH, UNO. PEN PER E/S-001 TO POSTS AT ALL EXTERIOR WALLS AND INTERIOR SHEAR WALLS. POSTS AT HOLDOWNS TO BE FULL HEIGHT AND PER 8/S-102.
6. FOR ROOF DRAINAGE, TOP OF FRAMING BETWEEN NOTED POINTS IS A STRAIGHT LINE.
7. ALL MECHANICAL SUPPLY AND RETURN OPENINGS TO BE BETWEEN FRAMING UNO.
8. HSS OR PIPE COLUMNS IN STUD WALLS ARE TO BE TRIMMED PER 17/S-102. REFER TO PLANS AND DETAILS FOR OTHER REQUIREMENTS.
9. JOISTS AND RAFTERS ARE PER PLAN WITH "HU" HANGERS (SKEWED AND/OR SLOPED AS REQUIRED) AT FLUSH FRAMING UNO. HANGER SIZE TO BE CORRECT FULL SIZE FOR JOIST SIZE (I.E. HU210 FOR 2x10). HANGERS FOR SAWN BEAMS TO BE HUS.
10. PROVIDE SOLID BLOCKING @ 8'-0"oc MAX FOR ALL 2x12 REPETITIVE FRAMING. PROVIDE SOLID BLOCKING OR SIMPSON TB X-BRIDGING @ 8'-0"oc MAX FOR ALL 1½" LSL AND 1¾" LVL REPETITIVE FRAMING WITH A DEPTH OF 11¼" OR GREATER.
11. ROUND HOLES IN STEEL PLATES TO BE 1/16" OVERSIZE. SLOTTED HOLES IN STEEL PLATES SHALL BE 1/16" WIDER THAN THE BOLT DIAMETER AND HAVE A LENGTH OF 2 TIMES THE BOLT DIAMETER. THE DIRECTION OF THE SLOTTED LENGTH IS INDICATED ON THE DETAILS (VSH OR HSH). INSTALL BOLT AT THE CENTER LINE OF THE HOLE. BOLT HOLES IN WOOD SHALL BE ROUND AND 1/32" OVERSIZE. CUT OFF BOLT THREADED END FLUSH WITH NUT WHEN REQUIRED BY FINISHES AND 1" MAXIMUM FROM NUT OTHERWISE. PROVIDE STANDARD CUT WASHERS UNDER HEAD AND NUT WHERE BOLT BEARS ON WOOD. USE PLATE OR MALLEABLE IRON WASHERS AT EXPOSED CONDITIONS OR AS INDICATED.
12. ALL BOLTED OR NAILED STRAP CONNECTIONS SHALL HAVE AN EQUAL NUMBER OF BOLTS OR NAILS EACH SIDE OF THE SPLICE JOINT. THE FIRST BOLT OR NAIL FROM EACH SIDE OF THE SPLICED OR STRAPPED MEMBER SHALL BE EQUIDISTANT FROM THE SPLICE. STRAPS USING 16d NAILS ON 2x MATERIAL TO BE INSTALLED ON THE 1½" EDGE OF THE MEMBER.
13. THE CONTRACTOR SHALL VERIFY THAT THE MOISTURE CONTENT OF ALL FRAMING LUMBER AND SHEATHING MEET THE REQUIREMENTS OF THE SPECIFICATIONS AT THE TIME OF INSTALLATION AND AT CLOSE-IN. THE CONTRACTOR SHALL PROVIDE ALLOWANCE FOR DIFFERENTIAL SHRINKAGE BETWEEN FLOORS, ETC.
14. VENTING IS REQUIRED IN ENCLOSED FRAMING AREAS, SAD. DRILL BLOCKING AND LEDGERS AND PROVIDE SKIP BLOCKING AS DETAILED.
15. SAD FOR CEILING INFO. WHERE REQUIRED PROVIDE CEILING JOISTS PER 15/S-102, UNO.
16. ALL SHEATHING SHALL HAVE 1/8" GAP AT ALL EDGES AND JOINTS. TYPICAL SHEATHING:

    A. FLAT ROOF SHEATHING (SLOPE 2:12 OR LESS): 19/32" T&G APA RATED SHEATHING (40/20) EXP 1 WITH 10d @ 6"oc EDGES (PEN) AND 12"oc FIELD UNO ON PLANS. LAY PERPENDICULAR TO FRAMING MEMBERS. BLOCK ALL EDGES WITH 2x4 LAID FLAT & WITH SIMPSON Z CLIP EACH END AT I-JOIST. NO PANELS LESS THAN 24" WIDE SHALL BE USED. STAGGER SHEETS.

A DESIGN CRITERIA

DESIGN CRITERIA: 2022 CALIFORNIA CODE OF REGULATIONS, TITLE 24, PART 2 (CBC)
ROOF LIVE LOAD: 20 PSF (REDUCIBLE)
CURRENT SOLAR: 5 PSF ALLOWANCE

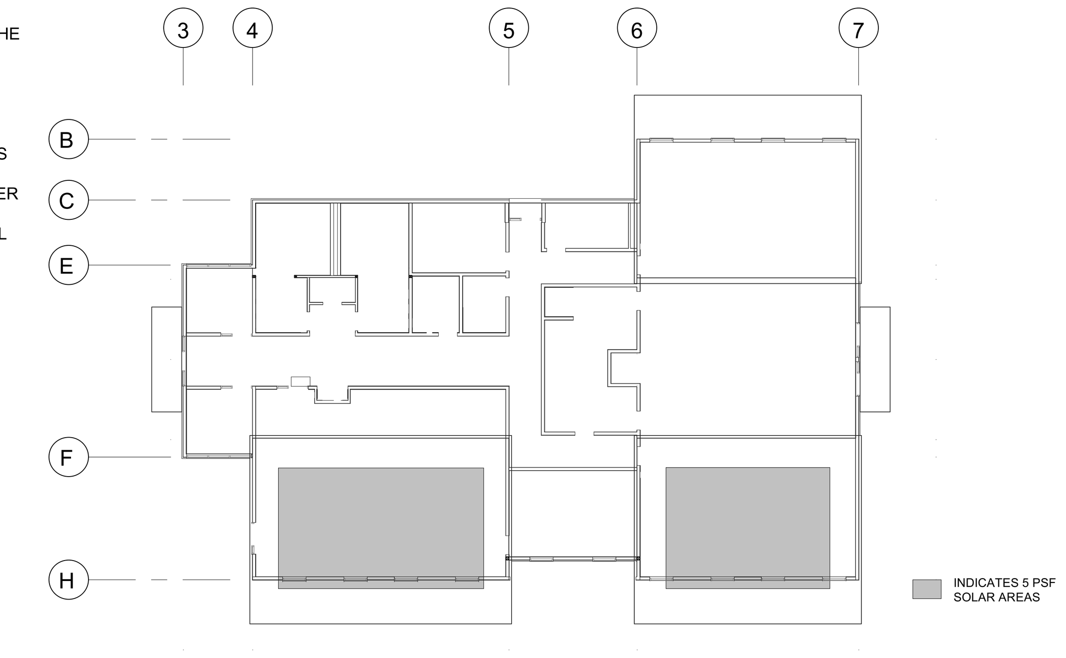

PHASE 1 - CURRENT SOLAR KEY PLAN
NOT TO SCALE

FUTURE SOLAR: 3 PSF ALLOWANCE (EXCEPT AT CURRENT SOLAR INSTALLATION AREAS)
RISK CATEGORY: II
WIND DATA: ULTIMATE WIND SPEED (3 SEC GUST) IN MPH: 92
WIND EXPOSURE: C
INTERNAL WIND PRESSURE COEFFICIENT (GCPI) = ±0.18
COMPONENTS AND CLADDING DESIGN PRESSURES FOR SYSTEMS DESIGNED BY OTHERS SHALL COMPLY WITH THE "ASCE 7-16" DESIGN STANDARD
EARTHQUAKE DATA: SEISMIC IMPORTANCE FACTOR, I_e: 1.0
MAPPED SPECTRAL RESPONSE ACCELERATIONS: S_S = 2.01; S_1 = 0.71
SITE CLASS: D
SPECTRAL RESPONSE COEFFICIENTS: S_{DS} = 1.34; S_{D1} = 0.80
SEISMIC DESIGN CATEGORY: D
SEISMIC FORCE RESISTING SYSTEMS:
WOOD FRAMED SHEAR WALLS:
R = 6.5; Ω = 2.5; C_d = 4.0
STEEL SPECIAL MOMENT FRAME:
R = 8.0; Ω = 2.5; C_d = 5.5
DESIGN BASE SHEAR, CLASSROOM BUILDING: 40.0k (ASD)
TASTING ROOM: 11.1k (ASD)
SEISMIC RESPONSE COEFFICIENT, CLASSROOM BUILDING: C_S = 0.145 (ASD)
TASTING ROOM: C_S = 0.145 (ASD)
ANALYSIS PROCEDURE USED: EQUIVALENT LATERAL FORCE

MAXIMUM ANTICIPATED STORY DRIFT = 0.020 X HEIGHT
PROVIDE DEFORMATION COMPATIBILITY PER ASCE 7 SECTION 12.12.5 FOR NON-STRUCTURAL ITEMS, INCLUDING CLADDING, GLAZING, ETC.

SCOPE: NEW SINGLE STORY WOOD-FRAMED CLASSROOMS BUILDING, TASTING ROOM, AND COVERED BREEZEWAY. THE CLASSROOM BUILDING IS SEISMICALLY SEPARATE FROM THE BREEZEWAY AND TASTING ROOM.

B GENERAL NOTES

1. REFER TO SHEETS S-101, S-102 AND S-103 FOR STANDARD DETAILS OF CONSTRUCTION. REFER TO THE PROJECT SPECIFICATIONS FOR MATERIALS AND METHODS.
2. BUILDING DIMENSIONS SHOWN ARE FOR GENERAL REFERENCE ONLY. SEE ARCHITECTURAL DRAWINGS (SAD) FOR ALL ACTUAL BUILDING DIMENSIONS. ANY DISCREPANCIES ARE TO BE BROUGHT TO THE ATTENTION OF THE ARCHITECT/ENGINEER SO CLARIFICATION CAN BE MADE PRIOR TO COMMENCING WORK.
3. STRUCTURAL DRAWINGS SHALL NOT BE SCALED. ALL DIMENSIONS AND FIT SHALL BE DETERMINED AND VERIFIED BY THE CONTRACTOR PRIOR TO COMMENCING WORK.
4. DETAILS NOT FULLY OR SPECIFICALLY SHOWN SHALL BE OF SAME NATURE AS OTHER SIMILAR CONDITIONS.
5. REFER TO ARCHITECTURAL, CIVIL, AND LANDSCAPE DRAWINGS FOR SIDEWALK SLABS AND DIMENSIONS.
6. COORDINATION OF MECHANICAL, ELECTRICAL, PLUMBING, AND SITE UTILITY SYSTEMS WITH THE STRUCTURAL SYSTEM IS THE RESPONSIBILITY OF THE GENERAL CONTRACTOR. USE DETAILS ON SHEETS S-101 THROUGH S-103. AT CONDITIONS WHERE THESE DETAILS DO NOT APPEAR TO APPLY, NOTIFY THE STRUCTURAL ENGINEER PRIOR TO INSTALLATION. AT CONDITIONS WHERE FIELD MODIFICATIONS OF MECHANICAL, ELECTRICAL, PLUMBING, OR SITE UTILITIES AFFECT STRUCTURAL SYSTEMS, NOTIFY STRUCTURAL ENGINEER PRIOR TO INSTALLATION.
7. VERIFY WEIGHTS AND LOCATIONS OF MECHANICAL UNITS WITH MECHANICAL ENGINEER PRIOR TO PLACEMENT. UNITS VARYING OVER 10% IN WEIGHT SHALL BE REVIEWED BY THE STRUCTURAL ENGINEER PRIOR TO INSTALLATION (MECHANICAL WEIGHTS SHOWN ARE MAXIMUM). CONTRACTOR TO VERIFY MECHANICAL UNIT SIZES AND WEIGHTS AS INSTALLED PRIOR TO INSTALLATION OF SPECIAL FRAMING TO ENSURE CORRECT PLACEMENT UNDER CURBS, ETC. SEE 18/S-102.
8. SHORING AND BRACING DESIGN, MATERIALS AND INSTALLATION SHALL BE PROVIDED BY THE GENERAL CONTRACTOR, AND SHALL BE ADEQUATE FOR ALL LOADS. LEAVE IN PLACE AS LONG AS MAY BE REQUIRED FOR SAFETY AND UNTIL FINAL STRUCTURAL CONSTRUCTION IS COMPLETED.
9. SPECIAL INSPECTIONS ARE REQUIRED PER THE TESTING AND INSPECTION FORM, SEE DSA-103 FORM.
10. NOTIFY ZFA FOR GENERAL ON SITE REVIEW OF:
    - MINIMUM FOOTING SIZE AND REINFORCING STEEL.
    - WOOD SHEAR WALLS, SHEAR PANELS AND ROOF DIAPHRAGMS, INCLUDING NAILING, BOLTING, ANCHORAGE AND OTHER FASTENING TO OTHER COMPONENTS OF THE SEISMIC FORCE RESISTING SYSTEM.
    - STRUCTURAL WOOD FRAMING.
    - MOMENT FRAME FRAMING AND ANCHORAGE.

    NOTIFY ZFA FOR REVIEW PRIOR TO COVERING ABOVE LISTED WORK. PROVIDE 2 WORKING DAYS MINIMUM SCHEDULING NOTICE PRIOR TO REVIEW DATE.
11. SUBMIT ENGINEERING OF ITEMS TO ARCHITECT/ENGINEER FOR REVIEW PRIOR TO FABRICATION. SAD AND SPECIFICATIONS FOR THE REQUIREMENTS. GENERAL CONTRACTOR SHALL REVIEW AND APPROVE DIMENSIONS AND DETAILS SHOWN ON THE SHOP DRAWINGS PRIOR TO SUBMITTAL. CONTRACTOR TO PROVIDE DRAWINGS AND CALCULATIONS PREPARED AND SIGNED BY A CALIFORNIA LICENSED CIVIL / STRUCTURAL ENGINEER FOR THE FOLLOWING ITEMS, UNLESS NOTED OTHERWISE:

    A. STORE FRONT AND GLAZING SYSTEMS: INCLUDE ATTACHMENTS TO STRUCTURE. DESIGN LOADS PER CODE/SPECIFICATIONS.

SHEET INDEX	
S-001	GENERAL NOTES
S-101	TYPICAL CONCRETE DETAILS
S-102	TYPICAL WOOD DETAILS
S-103	TYPICAL WOOD & I-JOIST DETAILS
S-201	PHASE 1 FOUNDATION AND ROOF FRAMING PLANS
S-202	PHASE 2 FOUNDATION AND ROOF FRAMING PLANS
S-203	PHASE 1 ENLARGED FOUNDATION PLAN
S-204	PHASE 1 ENLARGED ROOF FRAMING PLAN
S-205	PHASE 2 ENLARGED FOUNDATION PLAN
S-206	PHASE 2 ENLARGED ROOF FRAMING PLAN
S-301	ELEVATIONS
S-302	SCHEMATIC 3D VIEW
S-401	FOUNDATION DETAILS
S-501	STEEL DETAILS
S-601	WOOD DETAILS
S-602	WOOD DETAILS

IDENTIFICATION STAMP
DIV. OF THE STATE ARCHITECT
APP: 01-120890 INC:
REVIEWED FOR
SS ☑ FLS ☑ ACS ☑
DATE: 10/25/2023

TLCDARCHITECTURE
520 Third St. #250
Santa Rosa, CA 95401
o: 707.525.5600
f: 707.525.5616
tlcd.com

CONSULTANT:

ZFA STRUCTURAL ENGINEERS
1212 fourth street | suite z
santa rosa ca 95404
zfa job no. 22072
zfa.com
707.526.0992

copyright © 2023

STAMP:
REGISTERED PROFESSIONAL ENGINEER CHRIS S. WARNER No. S4613 STRUCTURAL STATE OF CALIFORNIA
10/10/2023

REVISIONS:

Number	Date	Description
1	Date 1	DSA

NVC WINE EDUCATION CENTER

2277 NAPA VALLEJO HWY
NAPA, CA 94558

NAPA VALLEY COLLEGE

DSA PROJECT NUMBER: 01-120890
PROJECT NUMBER: 22072
DATE: 4/12/2023
ENGINEER: JLT / NLG
PROJECT MANAGER: CEM

THIS DOCUMENT AND THE IDEAS INCORPORATED HEREIN, AS AN INSTRUMENT OF PROFESSIONAL SERVICE, IS THE PROPERTY OF THE ENGINEER AND IS NOT TO BE USED, IN WHOLE OR IN PART FOR ANY OTHER PROJECT WITHOUT THE PRIOR WRITTEN AUTHORIZATION OF THE ENGINEER.

GENERAL NOTES

S-001

CARBON SCREW ANCHOR IN 3000 PSI MIN CONCRETE

ANCHOR TYPE	ANCHOR AND PILOT HOLE DIA	MINIMUM EMBEDMENT H_{nom}	MINIMUM EDGE DIST C_{min}	MINIMUM SPCG S_{min}	MINIMUM CONCRETE THICKNESS H_{min}	MINIMUM INSTALL TORQUE (FT-LB)	MAXIMUM INSTALL TORQUE (FT-LB)
SIMPSON TITEN HD (ICC-ESR 2713)	¼"	1⅝"	1½"	1½"	3¼"	10	24
	⅜"	2½"	1¾"	3"	4"	10	50
	½"	3¼"	1¾"	3"	5"	10	65
	⅝"	4"	1¾"	3"	6"	10	100
	¾"	5½"	1¾"	3"	8¾"	20	150
HILTI KH-EZ (ICC-ESR 3027)	¼"	1⅝"	1½"	1½"	3¼"	10	18
	⅜"	2½"	1½"	3"	4"	10	40
	½"	3"	1¾"	3"	4¾"	10	45
	⅝"	3¼"	1¾"	4"	5"	10	85
	¾"	4"	1¾"	4"	6"	20	95
STAINLESS STEEL SCREW ANCHOR IN 3000 PSI MIN CONCRETE							
SIMPSON TITEN HDSS (IAPMO UES ER-493)	⅜"	2½"	1¾"	3"	4"	10	40
	½"	3¼"	1¾"	4"	5"	10	70
	⅝"	4"	1¾"	3"	6"	10	85
	¾"	5½"	1¾"	3"	8¾"	20	150

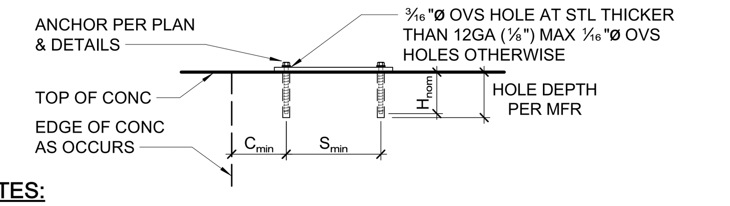

NOTES:

1. EXCEPT AT EXTERIOR EXPOSURE CONDITIONS, PROVIDE CARBON STEEL ANCHORS UNO. INSTALL SCREW ANCHORS PER MANUFACTURER'S INFORMATION AND ICC REPORT INSTRUCTIONS. SPECIAL INSPECTION IS REQUIRED PER SECTION 1705A OF THE CBC AND THE REQUIREMENTS OF THE ICC REPORTS. INSTALLED ANCHORS SHALL BRING CONNECTED PLIES INTO FIRM CONTACT, MEETING THE INSTALL TORQUE BUT NOT EXCEEDING THE MAXIMUM INSTALL TORQUE.
2. CONTRACTOR TO VERIFY MINIMUM EDGE DISTANCES, SPACING AND THICKNESS ARE IN ACCORDANCE W/ SCHEDULE PRIOR TO INSTALLING ANCHOR.
3. HOLES TO BE DRILLED W/ ROTARY DRILL ONLY. WHEN INSTALLING DRILLED-IN ANCHORS IN EXISTING REINFORCED CONCRETE, USE CARE AND CAUTION TO AVOID CUTTING OR DAMAGING THE EXISTING REINFORCING BARS. MAINTAIN 1" CLEARANCE BETWEEN REINFORCEMENT AND THE DRILLED-IN ANCHOR. FILL ABANDONED HOLES W/ HIGH STRENGTH GROUT.
4. THE SPECIAL INSPECTOR SHALL PERFORM PERIODIC/CONTINUOUS INSPECTION IN ACCORDANCE WITH TABLE 1705A.3. THE SPECIAL INSPECTOR SHALL INSPECT ANCHOR TYPE, ANCHOR DIMENSIONS, HOLE CLEANLINESS, EMBEDMENT DEPTH, CONCRETE TYPE, CONCRETE COMPRESSIVE STRENGTH, DRILL BIT DIAMETER, HOLE DEPTH, EDGE DISTANCE(S), ANCHOR SPACING(S), CONCRETE THICKNESS, AND TIGHTENING TORQUE.
5. TEST ANCHORS IN ACCORDANCE W/ CBC SECTION 1910A.5.

13 SCREW ANCHOR IN CONCRETE
3/4" = 1'-0"

STAINLESS STL EXPANSION ANCHORS IN 3000 PSI MIN CONC

ANCHOR TYPE	ANCHOR & PILOT HOLE DIA	MIN NOMINAL EMBED H_{nom}	MIN EDGE DISTANCE C_{min}	MIN SPACING S_{min}	MIN CONC THICKNESS H_{min}	INSTALL TORQUE (FT-LB)
SIMPSON STRONG-BOLT 2 (ICC-ESR 3037)	⅜"	1⅞"	6"	10"	3¼"	30
	½"	2¾"	6½"	8"	4½"	65
	⅝"	3⅜"	4"	8"	5½"	80
	¾"	4⅛"	6"	6½"	6¾"	150
HILTI KB-TZ2 (ICC-ESR 4266)	⅜"	1⅞"	5"	8"	3¼"	30
	½"	2½"	2¾"	5½"	4"	40
	⅝"	3¼"	4"	7"	5"	60
	¾"	4"	5"	11"	5½"	125
CARBON STEEL EXPANSION ANCHORS IN 3000 PSI MIN CONC						
SIMPSON STRONG-BOLT 2 (ICC-ESR 3037)	⅜"	1⅞"	6"	3"	3¼"	30
	½"	2¾"	6"	6"	4"	60
	⅝"	3⅜"	6½"	5"	5½"	90
	¾"	4⅛"	4¼"	10"	6"	150
	1"	5¼"	8"	8"	9"	230
HILTI KB1 (IAPMO-ER 678)	⅜"	1⅞"	8"	8"	3⅜"	20
	½"	2⅜"	4"	8½"	4"	40
	⅝"	3¼"	5½"	8"	5"	60
	¾"	4"	9½"	5"	5½"	110

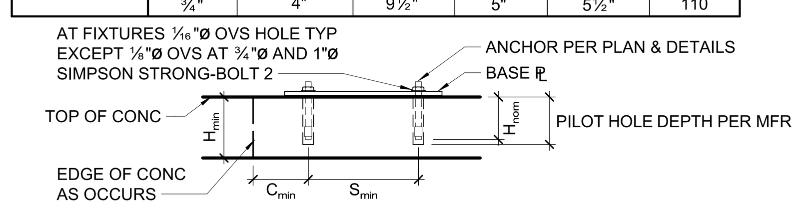

NOTES:

1. EXCEPT AT EXTERIOR EXPOSURE CONDITIONS, PROVIDE CARBON STEEL ANCHORS UNO. INSTALL EXPANSION ANCHORS PER MANUFACTURER'S INFORMATION AND ICC REPORT INSTRUCTIONS. SPECIAL INSPECTION IS REQUIRED PER SECTION 1705A AND THE REQUIREMENTS OF THE ICC REPORTS.
2. CONTRACTOR TO VERIFY MINIMUM EDGE DISTANCES, SPACING AND THICKNESS ARE IN ACCORDANCE W/ SCHEDULE PRIOR TO INSTALLING ANCHOR.
3. NO CORE DRILLING PERMITTED. USE CARE AND CAUTION TO AVOID CUTTING OR DAMAGING THE EXISTING REINFORCING BARS. MAINTAIN 1" CLEARANCE BETWEEN REINFORCEMENT AND THE DRILLED-IN ANCHOR. FILL ABANDONED HOLES W/ HIGH STRENGTH GROUT.
4. THE SPECIAL INSPECTOR SHALL PERFORM PERIODIC/CONTINUOUS INSPECTION IN ACCORDANCE WITH TABLE 1705A.3. THE SPECIAL INSPECTOR SHALL INSPECT ANCHOR TYPE, ANCHOR DIMENSIONS, HOLE CLEANLINESS, EMBEDMENT DEPTH, CONCRETE TYPE, CONCRETE COMPRESSIVE STRENGTH, DRILL BIT DIAMETER, HOLE DEPTH, EDGE DISTANCE(S), ANCHOR SPACING(S), CONCRETE THICKNESS, AND TIGHTENING TORQUE.
5. TEST ANCHORS IN ACCORDANCE W/ CBC SECTION 1910A.5.

15 EXPANSION ANCHOR IN CONCRETE
3/4" = 1'-0"

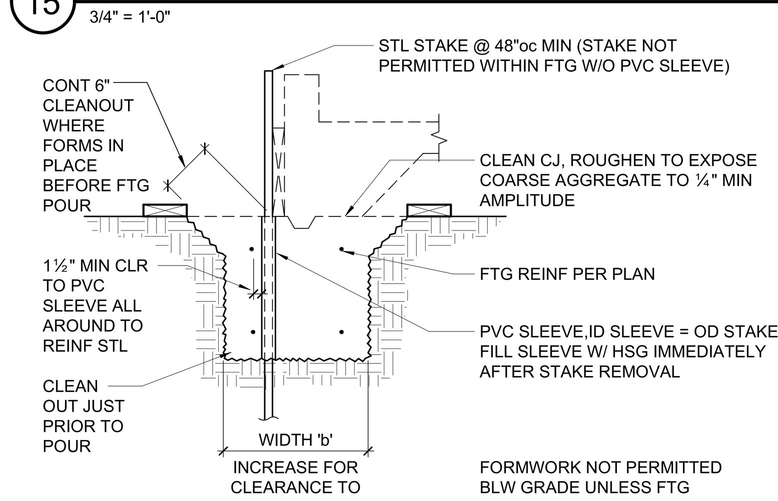

NOTE:
FOUNDATION CONCRETE MAY BE PLACED DIRECTLY INTO NEAT EXCAVATIONS PROVIDED THE FOUNDATION TRENCH WALLS ARE STABLE AS DETERMINED BY THE GEOTECHNICAL ENGINEER SUBJECT TO THE APPROVAL OF THE AUTHORITY HAVING JURISDICTION.

16 FORMWORK STAKES AT FOOTING
3/4" = 1'-0"

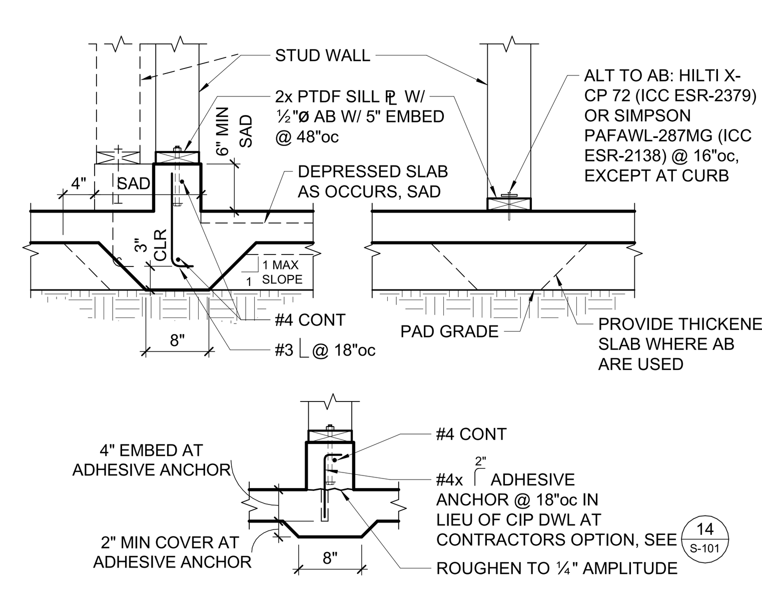

10 NON-BEARING STUD WALL AT SLAB
3/4" = 1'-0"

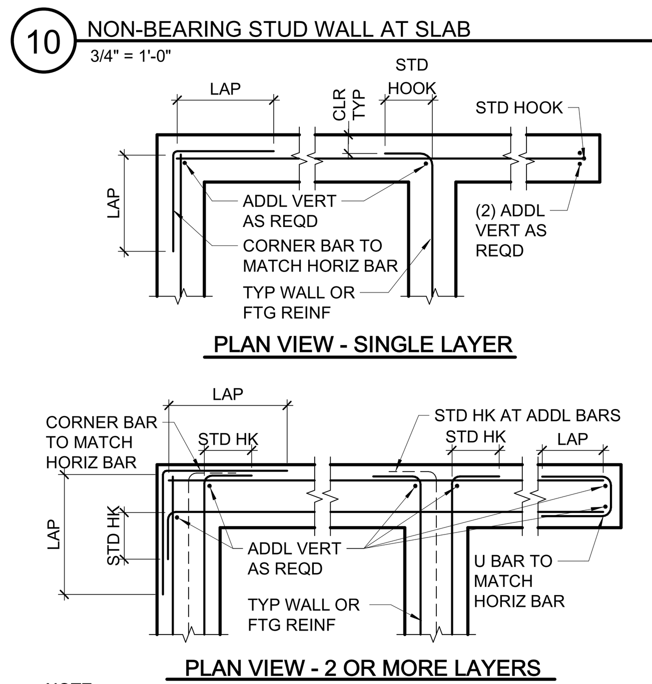

NOTE:
FOOTING REINFORCING AT CORNER AND INTERSECTION TO BE SIMILAR

11 TYPICAL CORNER, INTERSECTION AND END REINFORCING
3/4" = 1'-0"

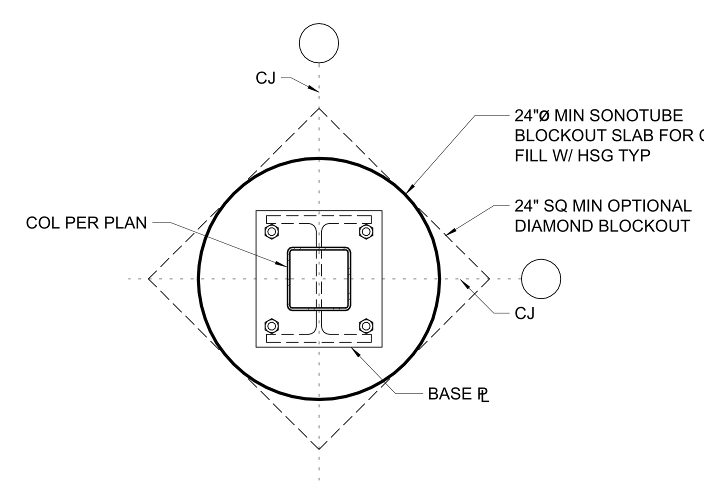

12 SLAB BLOCKOUT
1" = 1'-0"

ADHESIVE ANCHOR IN 3000 PSI MIN CONCRETE

ADHESIVE TYPE	ANCHOR THRD ROD	ANCHOR REBAR	PILOT HOLE	MIN EMBED UNO H_{ef}	MIN EDGE DISTANCE C_{min}	MIN SPCG S_{min}	MIN CONC DEPTH H_{min}
SIMPSON SET-XP (ICC-ESR 2508)	⅜"Ø	#3	½"Ø	3"	1¾"	3"	H_{ef} + 2½"
	½"Ø	#4	⅝"Ø	4"	1¾"	3"	H_{ef} + 3⅛"
	⅝"Ø	#5	¾"Ø	5"	1¾"	3"	H_{ef} + 3¾"
	¾"Ø	#6	⅞"Ø	6"	1¾"	3"	H_{ef} + 4⅜"
	⅞"Ø	#7	1"Ø	7"	1¾"	3"	H_{ef} + 4"
	1"Ø	#8	1⅛"Ø	8"	1¾"	3"	H_{ef} + 5⅝"
	1¼"Ø	#10	1⅜"Ø	10"	2¾"	6"	H_{ef} + 6⅞"
HILTI HIT-HY 200R (ICC-ESR 3187)	⅜"Ø	N/A	⁷⁄₁₆"Ø	3"	1¾"	1⅞"	H_{ef} + 1¼"
	N/A	#3	½"Ø	3"	1¾"	1⅞"	
	½"Ø	N/A	⁹⁄₁₆"Ø	4"	1¾"	2½"	
	N/A	#4	⅝"Ø	4"	1¾"	2½"	
	⅝"Ø	#5	¾"Ø	5"	1¾"	3⅛"	H_{ef} + 1½"
	¾"Ø	#6	⅞"Ø	6"	1¾"	3¾"	H_{ef} + 1¾"
	⅞"Ø	#7	1"Ø	7"	1¾"	4⅜"	H_{ef} + 2"
	1"Ø	#8	1⅛"Ø	8"	1¾"	5"	H_{ef} + 2¼"
	N/A	#9	1⅜"Ø	9"	1¾"	5⅝"	H_{ef} + 2¾"
	1¼"Ø	N/A	1⅜"Ø	10"	1¾"	6¼"	
	N/A	#10	1½"Ø	10"	1¾"	6¼"	H_{ef} + 3"

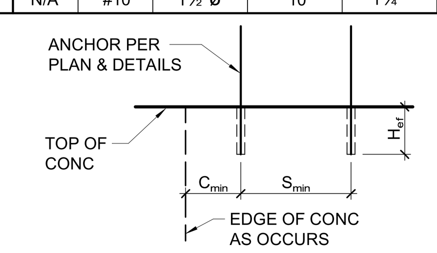

NOTES:

1. INSTALL ADHESIVE ANCHORS PER MANUFACTURER'S INFORMATION AND ICC REPORT.
2. CONTRACTOR TO VERIFY MINIMUM EDGE DISTANCES, SPACING, AND THICKNESS ARE IN ACCORDANCE W/ SCHEDULE PRIOR TO INSTALLING ANCHOR.
3. HOLES TO BE DRILLED W/ ROTARY DRILL ONLY. WHEN DRILLING HOLES IN EXISTING CONCRETE, USE CARE AND CAUTION TO AVOID CUTTING OR DAMAGING THE EXISTING REINFORCING BARS. MAINTAIN A REASONABLE CLEARANCE BETWEEN REINFORCEMENT AND THE DRILLED-IN ANCHOR. FILL ABANDONED HOLES W/ HIGH STRENGTH GROUT.
4. SPECIAL INSPECTION IS REQUIRED PER SECTION 1705A AND THE REQUIREMENTS OF THE ICC REPORTS. THE SPECIAL INSPECTOR SHALL PERFORM PERIODIC/CONTINUOUS INSPECTION IN ACCORDANCE WITH TABLE 1705A.3. THE SPECIAL INSPECTOR SHALL INSPECT ANCHOR TYPE, ANCHOR DIMENSIONS, HOLE CLEANLINESS, EMBEDMENT DEPTH, CONCRETE TYPE, CONCRETE COMPRESSIVE STRENGTH, DRILL BIT DIAMETER, HOLE DEPTH, EDGE DISTANCE(S), ANCHOR SPACING(S), CONCRETE THICKNESS, AND ADHESIVE INJECTION. TEST ANCHORS IN ACCORDANCE W/ CBC SECTION 1910A.5. SEE DRAWINGS FOR SPECIFIC TENSION TEST LOADS FOR ANCHORS.

14 ADHESIVE ANCHOR IN CONCRETE
3/4" = 1'-0"

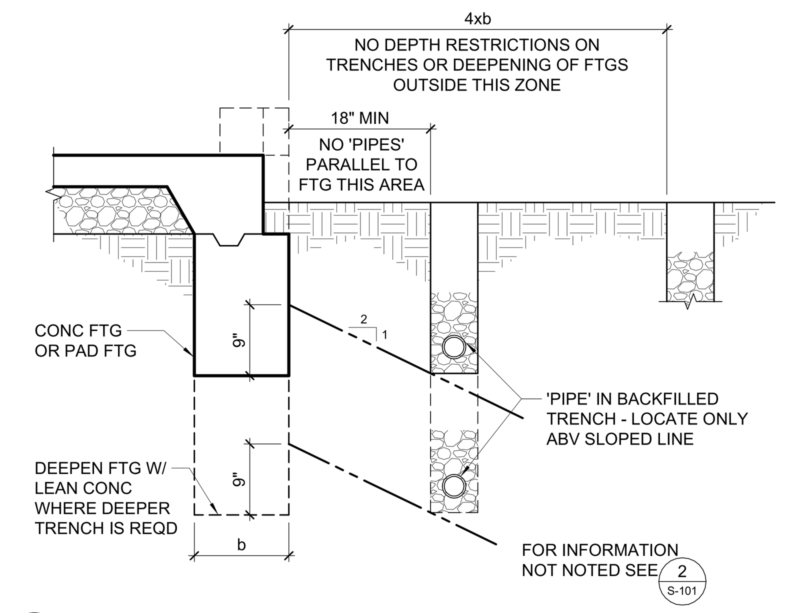

4 TRENCHING ADJACENT TO FOOTING
3/4" = 1'-0"

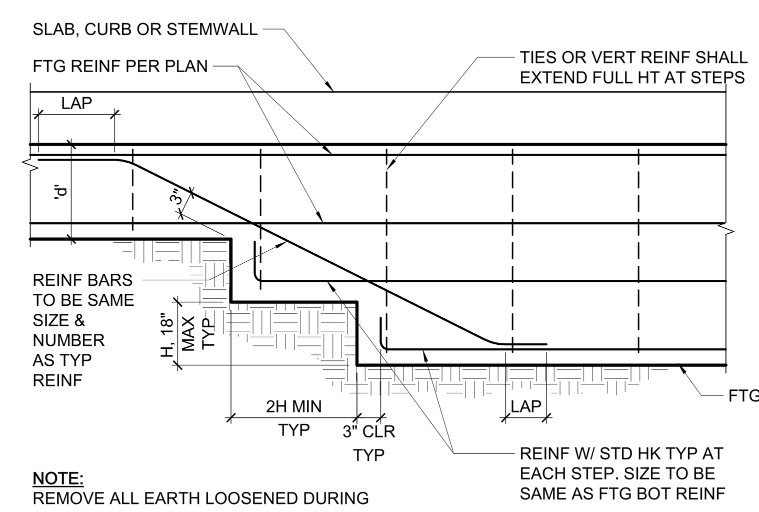

NOTE:
REMOVE ALL EARTH LOOSENED DURING EXCAVATION AND FILL W/ CONCRETE.

5 STEPPED FOOTING
3/4" = 1'-0"

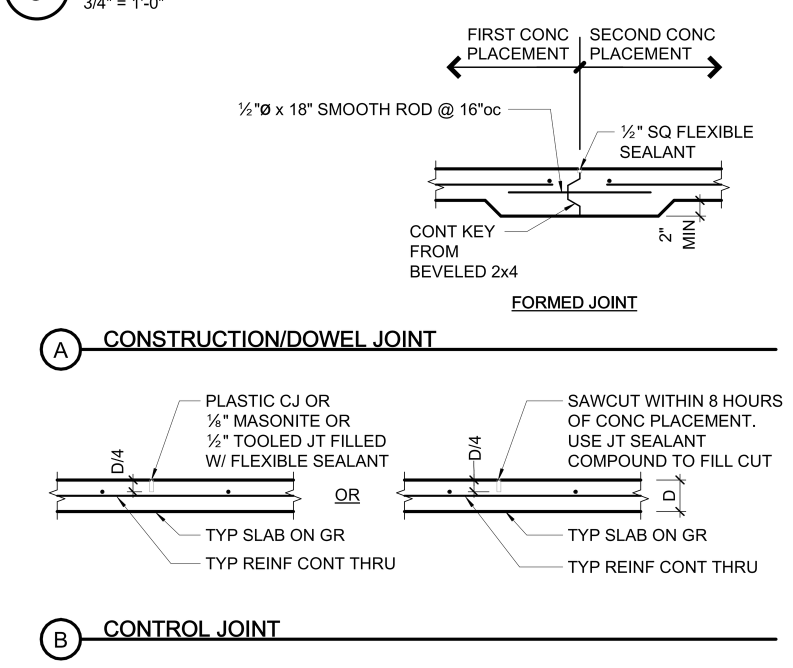

6 SLAB ON GRADE JOINTS
3/4" = 1'-0"

NOTES:
1. LOCATION OF PIPE/CONDUIT BY OTHERS.
2. PROVIDE SLEEVE AT PIPE PER 2/S-101 SIM.

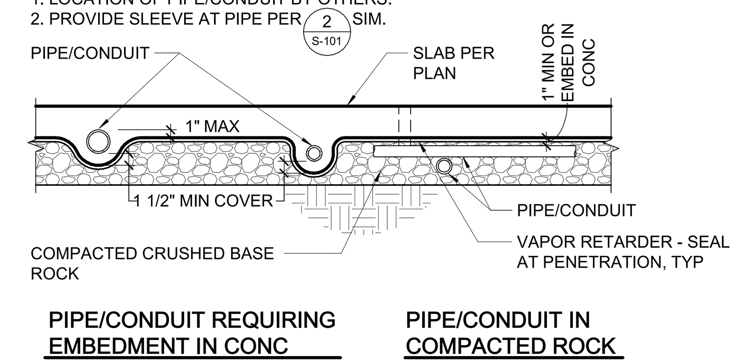

7 CONDUIT & PIPE AT SLAB ON GRADE
3/4" = 1'-0"

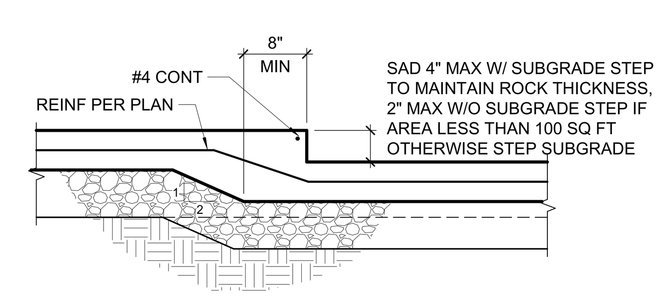

8 DEPRESSED SLAB - 4" MAX
3/4" = 1'-0"

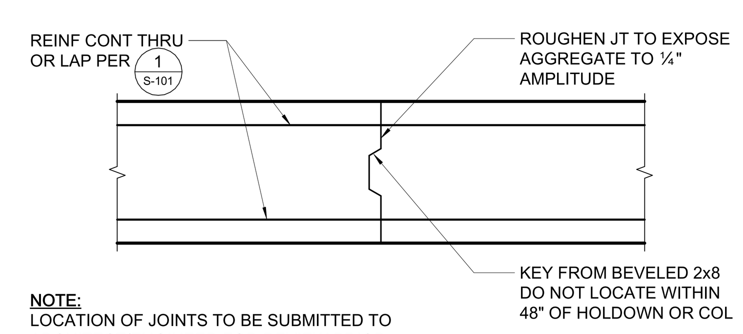

NOTE:
LOCATION OF JOINTS TO BE SUBMITTED TO ARCHITECT/ENGINEER FOR REVIEW PRIOR TO PLACEMENT OF CONCRETE

9 FOOTING CONSTRUCTION JOINT
3/4" = 1'-0"

MINIMUM BAR LAPS FOR REINFORCING STEEL
CONCRETE STRENGTH: 3000 PSI OR GREATER - (STAGGER SPLICES)

SIZE	LAP LENGTH	SIZE	LAP LENGTH	SIZE	LAP LENGTH
#3	17"	#6	34"	#9	86"
#4	24"	#7	56"	#10	105"
#5	34"✱	#8	70"	#11	126"

(CLASS B TOP BAR)
BAR SPCG SHALL NOT BE LESS THAN 4x BAR DIA OR 4".
✱ WHERE COVER NOT LESS THAN 1½", #5 LAP LENGTH = 28"

CONC COVER FOR REINF STL .... 'CLR'

CAST AGAINST EARTH OR GR .... 3"

EXPOSED TO EARTH (FORMED) OR WEATHER
- #5 & SMALLER .... 1½"
- #6 & LARGER .... 2"

NOT EXPOSED TO EARTH OR WEATHER
- #5 & SMALLER .... 1"
- #6 & LARGER, & ALL BM STIRRUPS, COL TIES & SPIRALS .... 1½"

ALL REINF SHALL EXTEND AS FAR AS POSSIBLE. WHERE BAR SPLICES ARE REQUIRED, BARS SHALL BE LAPPED PER SCHEDULE ABOVE UNLESS DETAILED OTHERWISE. WHERE REINF TERMINATES AT END OF MEMBER, REINF SHALL END IN A STD 90° OR 180° HK UNLESS DETAILED OTHERWISE.

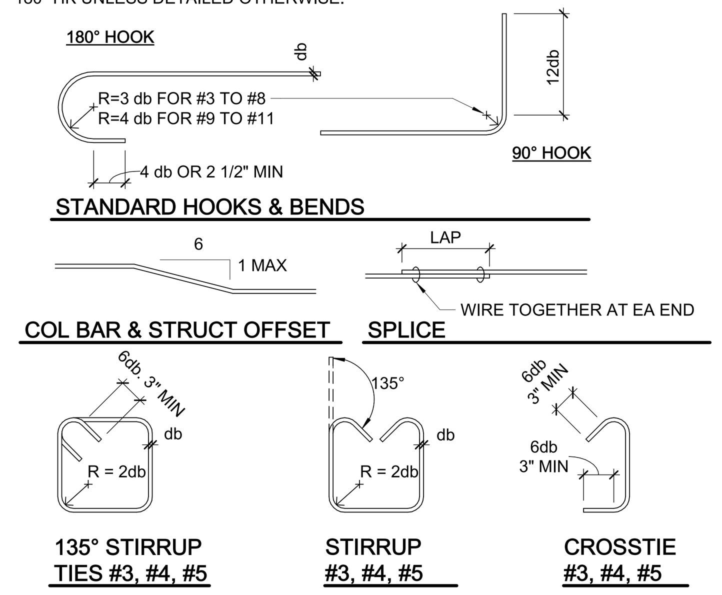

1 TYPICAL REINFORCING DETAIL (f'c = 3000psi MIN)
3/4" = 1'-0"

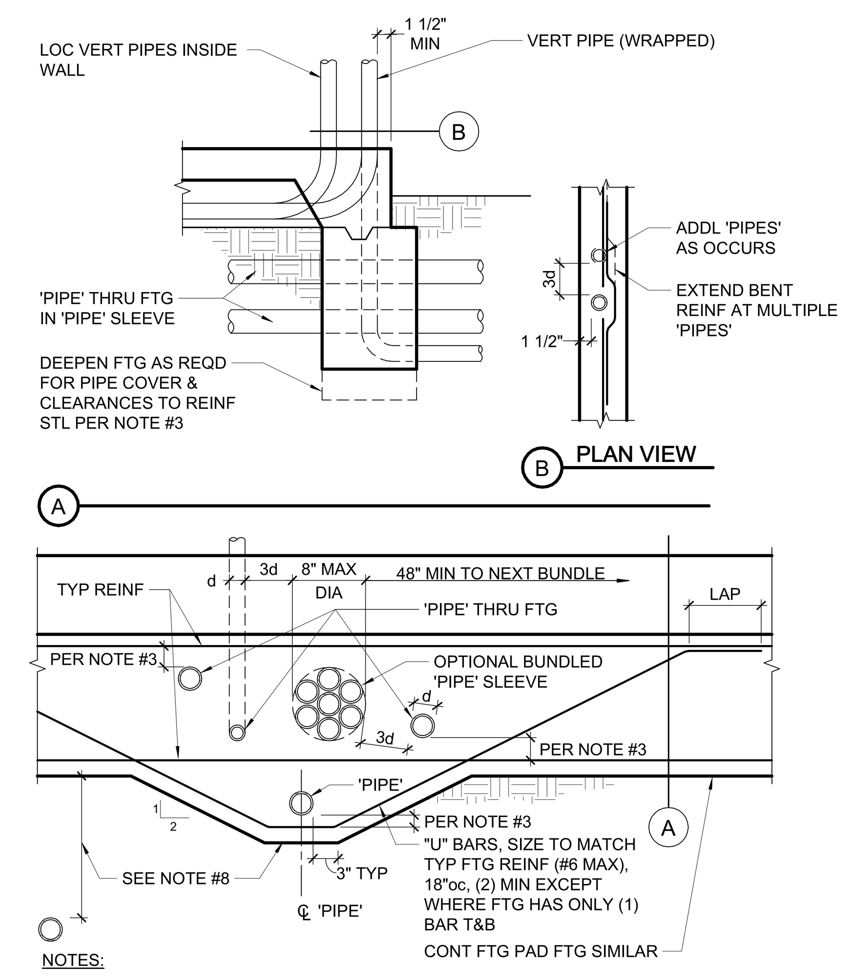

NOTES:

1. 'PIPE' = ANY PENETRATION THRU OR EMBEDDED IN FOUNDATION.
2. ALL PIPES THROUGH FOOTINGS TO BE WRAPPED OR SLEEVED AS FOLLOWS:
   a. SLEEVES: PROVIDE 1" MIN CLEAR ALL AROUND O.D. PIPE TO I.D. SLEEVE, UNO. SEAL SLEEVE ENDS W/ MASTIC OR PLASTIC BITUMINOUS CEMENT.
   b. WRAPPED VERTICAL PIPES: PROVIDE ⅛" NOMINAL SHEET FOAM W/ (3) WRAPS MINIMUM, UNO.
   c. WRAPPED HORIZONTAL PIPES: PROVIDE ⅛" NOMINAL SHEET FOAM W/ (8) WRAPS MINIMUM, UNO.
   d. UNDERGROUND FIRE LINES 4" AND LARGER:
      1. SLEEVES: PROVIDE 2" MIN CLEAR ALL AROUND O.D. PIPE TO I.D. SLEEVE. SEAL ENDS PER ABOVE.
      2. WRAPPED: PROVIDE ⅛" NOMINAL SHEET FOAM W/ (16) WRAPS MINIMUM.
3. WRAPPED AND SLEEVED PIPES SHALL HAVE 1½" MIN CLEAR TO REINF STEEL. MINIMUM CONCRETE COVER AT PIPES TO BE 3".
4. CLEARANCE BETWEEN 'PIPES' TO BE 3d MIN TYP W/ A MAXIMUM OF (8) PIPES PER 48". GROUPS OF PIPES MAY BE BUNDLED AS SHOWN, EXCEPT IN PAD FOOTINGS.
5. NO 'PIPE' TO RUN PARALLEL IN FOOTINGS, STEM OR CURB.
6. PVC CONDUIT ('PIPE') EMBEDDED IN CURB/STEM MAY BE WIRE TIED TO HORIZONTAL REINF.
7. NO HORIZONTAL PIPES ALLOWED THROUGH FOOTING WITHIN 2'-0" EACH SIDE OF HOLDOWNS OR STEEL COLUMNS.
8. PROVIDE 18" MIN OF COMPACTED FILL ABOVE PIPES UP TO 12"Ø, FOR LARGER PIPES INCREASE COMPACTED FILL DEPTH 1'-0" FOR EACH 6" INCREASE IN PIPE DIAMETER. OTHERWISE DEEPEN FOOTING AS SHOWN.

2 PIPES THRU FOOTING
3/4" = 1'-0"

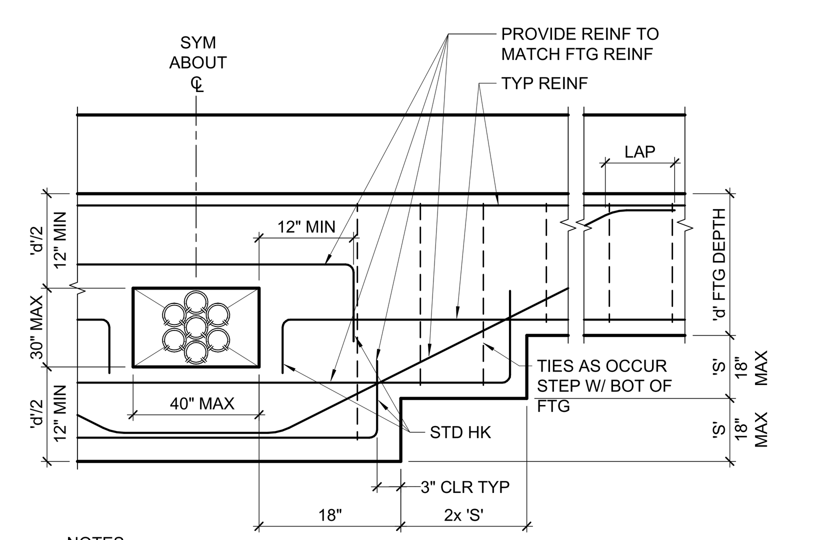

NOTES:
1. DO NOT LOCATE BLOCKOUT WITHIN 48" OF SHEAR WALL HOLD DOWN, IN MOMENT FRAME FOUNDATIONS OR COLUMN PAD FOOTINGS.
2. MINIMUM DISTANCE BETWEEN BLOCKOUTS OR OTHER PIPES TO BE 48".

3 FOUNDATION BLOCKOUT
3/4" = 1'-0"

IDENTIFICATION STAMP
DIV. OF THE STATE ARCHITECT
APP: 01-120890 INC:
REVIEWED FOR
SS ☑ FLS ☑ ACS ☑
DATE: 10/25/2023

TLCDARCHITECTURE
520 Third St. #250
Santa Rosa, CA 95401
o: 707.525.5600
f: 707.525.5616
tlcd.com

CONSULTANT:

ZFA STRUCTURAL ENGINEERS
1212 fourth street | suite z
santa rosa ca 95404
zfa job no. 22072
zfa.com
707.526.0992

copyright © 2023

STAMP:

10/10/2023

REVISIONS:

Number	Date	Description
1	Date 1	DSA

NVC WINE EDUCATION CENTER

2277 NAPA VALLEJO HWY
NAPA, CA 94558

THIS DOCUMENT AND THE IDEAS INCORPORATED HEREIN, AS AN INSTRUMENT OF PROFESSIONAL SERVICE, IS THE PROPERTY OF THE ENGINEER AND IS NOT TO BE USED, IN WHOLE OR IN PART FOR ANY OTHER PROJECT WITHOUT THE PRIOR WRITTEN AUTHORIZATION OF THE ENGINEER.

NAPA VALLEY COLLEGE

DSA PROJECT NUMBER
01-120890

PROJECT NUMBER:
22072

DATE:
4/12/2023

ENGINEER:
JLT / NLG

PROJECT MANAGER:
CEM

TYPICAL CONCRETE DETAILS

S-101

10/10/2023 11:52:06 AM C:\revit_local\22072_NVC_S23C_jacktH6UJH.rvt

CEILING JOIST SCHEDULE			
MAX SPAN	JOIST SIZE	HANGER IF REQUIRED	LEDGER IF REQUIRED
9'-0"	2x4 @ 16"oc	LU24	2x4 W/ (2) 16d EA STUD
12'-6"	2x6 @ 16"oc	LU26	2x6 W/ (3) 16d EA STUD

NOTES:
1. CEILING JOIST SCHEDULE IS BASED ON LL = 10 psf.
2. WHERE LEDGERS ARE NAILED THROUGH WALL SHTG, USE 20d NAILS IN LIEU OF 16d NAILS.
3. PROVIDE MIDSPAN BLOCKING AT 2x10 JOISTS.

15 CEILING JOIST SCHEDULE
3/4" = 1'-0"

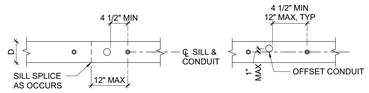

CASE 1 - SINGLE, CONDUIT DIAMETER ≤ D/3, MIN SPCG = 16"oc

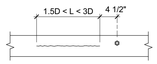

CASE 2 - SPLIT IN SILL

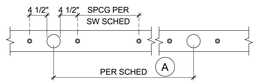

CASE 3 - SINGLE, CONDUIT DIAMETER > D/3

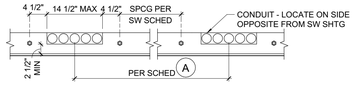

CASE 4 - NOTCH FOR CONDUIT

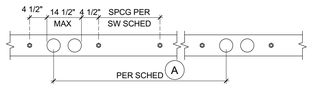

CASE 5 - MULTI CONDUIT, DIAMETER > D/3

SCHEDULE A			
	CASE 3	CASE 4	CASE 5
SW A	48"	32"	48"
SW B	64"	48"	64"
SW C	80"	64"	N/A
SW D	N/A	N/A	N/A

NOTE:
1. ALL PENETRATIONS THROUGH SHEAR WALL SILL PLATE SHALL CONFORM TO THE REQUIREMENTS OF THIS DETAIL OR BE REROUTED PRIOR TO INSTALLATION OF SILL.
2. PROVIDE ADDITIONAL ANCHOR BOLTS AS REQUIRED TO MEET INDICATED SPACINGS. ADDITIONAL ANCHOR BOLTS TO BE INSTALLED AT CENTERLINE OF SILL PLATE PER 13/S-101 WHERE NECESSARY. AB DIA AS REQD BY SW SCHED.

16 HOLES IN SILL PLATES AT SHEAR WALLS
3/4" = 1'-0"

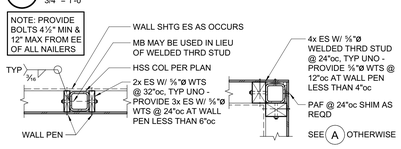

A HSS COLUMN WITHIN WALL

C HSS COLUMN AT CORNER

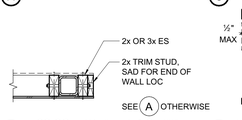

B HSS COLUMN AT END OF WALL (EDGE OF OPNG SIM)

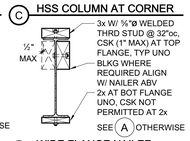

D WIDE FLANGE NAILER (CHANNEL & HSS SIM)

17 TYPICAL STEEL BEAM/COLUMN NAILERS
3/4" = 1'-0"

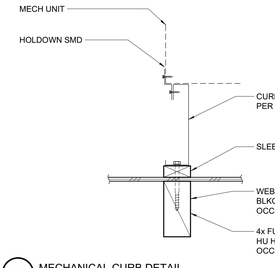

18 MECHANICAL CURB DETAIL
1 1/2" = 1'-0"

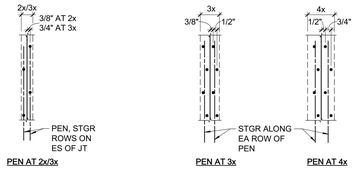

NOTE:
SHEATHING SHEETS ARE TO BE AS LARGE AS POSSIBLE. STAGGER SHEETS. JOINTS ARE TO BE CENTERED OVER BEARING. NAIL HEADS SHALL BE DRIVEN FLUSH W/ SHEATHING. MINIMUM SHEATHING SIZE IS 24" WIDTH x 48" LENGTH AT ROOF, AND 12"x48" AT WALLS.

11 SHEATHING NAILING
1 1/2" = 1'-0"

TOP PLATE SPLICE SCHEDULE		
MARK	LAP SPLICE (CASE 1)	ALT - STRAP SPLICE (CASE 2)
A	(12) 16d PER 4'-0" MIN LAP	MSTC28
B	(22) 16d PER 4'-0" MIN LAP	MSTC40
C	(26) 16d PER 6'-0" MIN LAP	MSTC52
F	(44) 16d PER 8'-0" MIN LAP	MSTC40 EA SIDE
H		MSTC66 EA SIDE

NOTES:
1. AT LAP SPLICES, SPACE NAILS @ 3"oc MIN (MAX 12"oc). STAGGER AT 2½" GAGE.
2. USE STRAP SPLICE WHERE BM INTERSECTS TOP ℄.
3. NAILS TO MATCH LAP SPLICE ES OF SPLICE (16d @ 12"oc MAX)
4. USE SPLICE TYPE A UNO.
5. AT LVL STUD WALLS, USE SAWN LUMBER TOP PLATE.

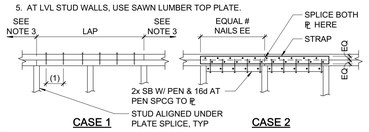

12 TOP PLATE SPLICE SCHEDULE AND DETAILS
3/4" = 1'-0"

SPLICE NOTES:
1. PROVIDE 3x OR (2) 2x STUDS AT SPLICE
2. ALL NAILS TO BE 10d NAIL ALL HOLES
3. FOR CASE 1, SPLICE W/ MSTA36 AT BM
4. USE SPLICE TYPE 'A' UNO
5. AT LVL LEDGER, CASE 1 IS NOT PERMITTED

LEDGER SPLICE SCHEDULE				
MARK	CASE	STRAP/PLATE	ALT - CASE	STRAP/PLATE
A	1	MSTA24	2	MSTA24
B	1	MSTA30	2	MSTA30
C	2	MSTI48	3	MSTI60

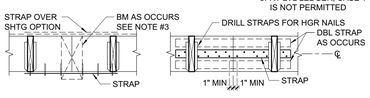

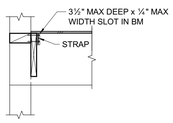

13 LEDGER OR RIM SPLICE SCHEDULE
3/4" = 1'-0"

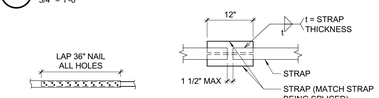

TIE STRAP SCHEDULE						
MARK	STRAP	MIN. NAILING ES OF ♦	MAX. NAIL SPACING (SEE NOTES #1 & #2)			MIN. END LENGTH (EL)
			CASE 1	CASE 2 EL	CASE 2 RL	
A	CS16	(10) 10d	10d @ 4"oc STGR	FILL ALL NAIL HOLES	10d @ 4"oc STGR	12"
B	CS14	(13) 10d	10d @ 4"oc STGR	FILL ALL NAIL HOLES	10d @ 4"oc STGR	16"
C	CMSTC16	(25) 10d	10d @ 3"oc STGR	FILL ALL NAIL HOLES	10d @ 3"oc STGR	24"
D	CMST14	(33) 10d	10d @ 3½"oc STGR	FILL ALL NAIL HOLES	10d @ 3½"oc STGR	32"
E	CMST12	(43) 10d	10d @ 3½"oc STGR	FILL ALL NAIL HOLES	10d @ 3½"oc STGR	48"

1. CASE 1 APPLIES UNLESS END LENGTH (EL) IS NOTED ON PLANS. WHERE END LENGTH (EL) IS NOTED, SEE CASE 2.
2. AS REQUIRED, PROVIDE CLOSER NAIL SPACING TO MEET MINIMUM NAILING EACH SIDE OF ♦.

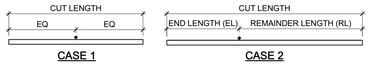

3. LOCATE STRAPS OVER SHEATHING AND BLOCK UNDER STRAP W/ FLAT 2x6 (2x4 AT CS16/CS14) WHERE NO FRAMING OCCURS, UNO. BLOCKING TO HAVE SIMPSON Z CLIP EACH END AT I-JOISTS.
4. SEE PLANS FOR STRAP LENGTHS, LOCATIONS AND DETAILS, UNO.
5. SPLICE STRAPS AS SHOWN WHERE LENGTH PER PLAN EXCEEDS AVAILABLE PRODUCT LENGTH

14 TIE STRAP SCHEDULE
3/4" = 1'-0"

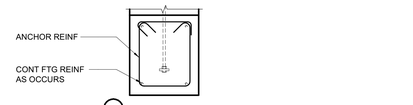

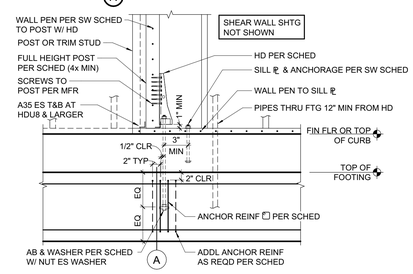

HOLDOWN	AB OR THRD ROD	WASHER AT AB	ANCHOR REINF	MIN POST SIZE UNO ON PLANS
HDU2	⅝"ø	⅛"×2½" SQ	#3 ES	4x
HDU4	⅝"ø	⅛"×2½" SQ	#3 ES	4x
HDU5	⅝"ø	⅛"×2½" SQ	#3 ES	4x
HDU8	⅞"ø	⅛"×3" SQ	(2) #3 ES	6x6
HDU11	1"ø	⅜"×3½" SQ	(2) #3 ES	6x6
HDU14*	1"ø	⅜"×3½" SQ	(2) #3 ES	6x6

*NUTS AT ANCHOR ROD TO BE HEAVY HEX

8 TYPICAL HOLDOWN - ANCHOR REINFORCEMENT
3/4" = 1'-0"

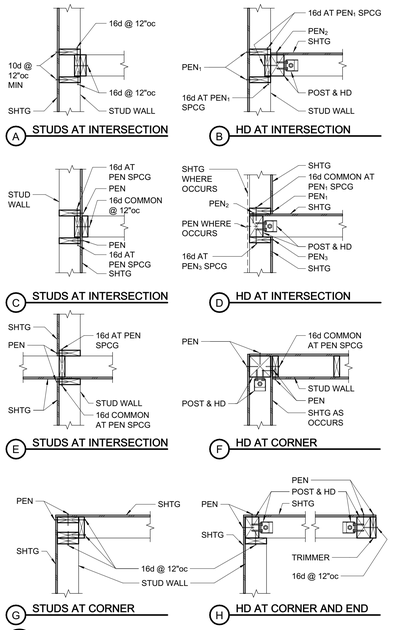

9 TYPICAL PLAN VIEW OF STUD WALL INTERSECTIONS
3/4" = 1'-0"

RIM JOIST/BLKG TO TOP ℄, TOE NAIL · · ·

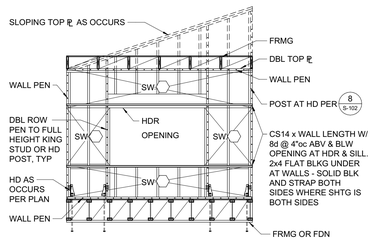

NOTE:
FRAMING SHOWN IS SCHEMATIC,
SEE PLAN FOR SPECIFIC REQUIREMENTS

9 SCHEMATIC SHEAR WALL ELEVATION
1/4" = 1'-0"

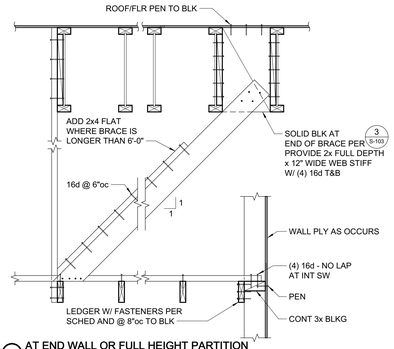

A AT END WALL OR FULL HEIGHT PARTITION

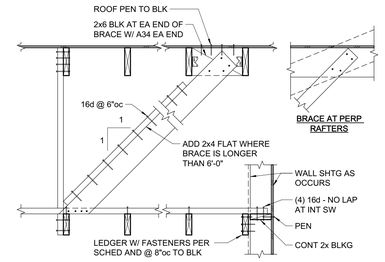

A AT END WALL OR FULL HEIGHT PARTITION

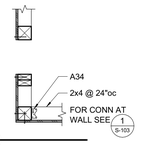

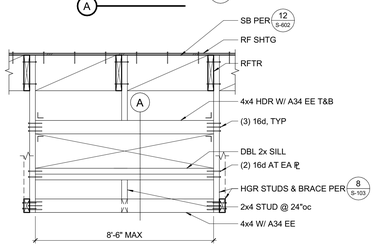

10 SOFFIT OPENING
3/4" = 1'-0"

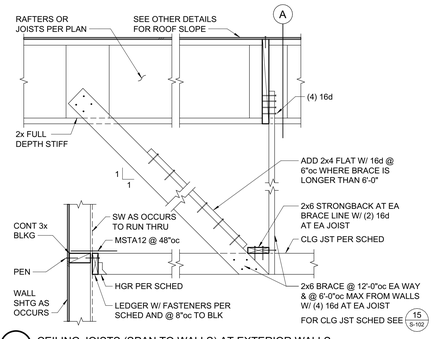

6 CEILING JOISTS (SPAN TO WALLS) AT EXTERIOR WALLS
3/4" = 1'-0"

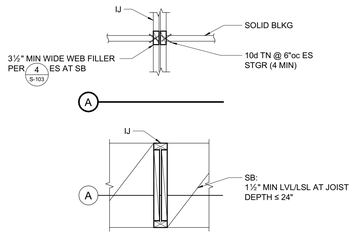

SOLID BLOCKING

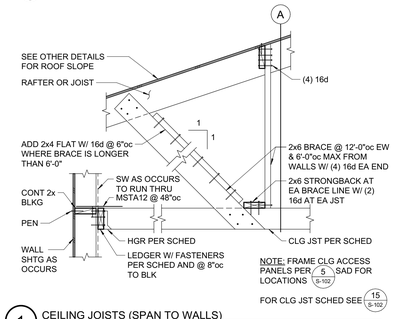

1 CEILING JOISTS (SPAN TO WALLS)
3/4" = 1'-0"

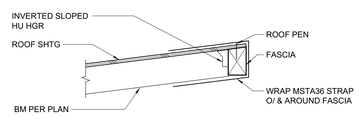

7 INVERTED HANGER
1" = 1'-0"

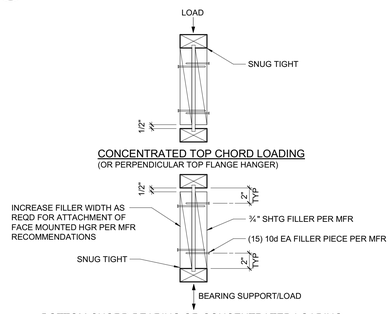

CONCENTRATED TOP CHORD LOADING
(OR PERPENDICULAR TOP FLANGE HANGER)

BOTTOM CHORD BEARING OR CONCENTRATED LOADING
(OR PERPENDICULAR FACE FLANGE HANGER)

4 I-JOIST WEB FILLER
1 1/2" = 1'-0"

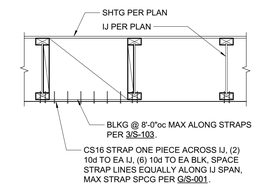

BRIDGING: OPTION 2 - BLOCK & STRAP

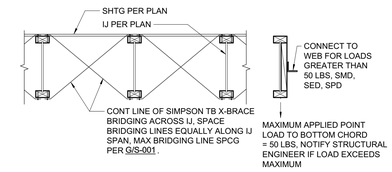

BRIDGING: OPTION 1 - TB X-BRIDGING

POINT LOAD

1. DO NOT CUT OR NOTCH FLANGES.
2. DO NOT CUT HOLES LARGER THAN 1½" ROUND IN CANTILEVERS.
3. HOLE SIZES AND LOCATIONS NOT MEETING THE HOLE GUIDELINES TO BE VERIFIED BY MANUFACTURER.
4. FOR SIMPLE SPANS AND UNIFORM LOADS A CHALK LINE CAN BE USED TO SHOW THE LIMITS WHEREIN HOLES ARE ACCEPTABLE. ONCE DISTANCE (D) HAS BEEN DETERMINED, THAT DIAMETER HOLE CAN BE PLACED ANYWHERE WITHIN THE WEB DEPTH (h).
5. D = DISTANCE IN FEET FROM CENTERLINE SUPPORT TO CENTER LINE OF HOLE.
   L = BEAM SPAN IN FEET; FROM CENTER LINE SUPPORT TO CENTER LINE SUPPORT.
   ø = HOLE DIAMETER IN INCHES.
   h = WEB DEPTH IN INCHES.

$D_{MIN} = \frac{3L\varnothing}{5h}$ OR 12", WHICHEVER IS GREATER

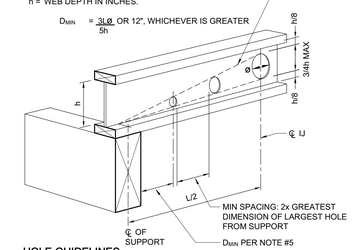

HOLE GUIDELINES

2 I-JOIST HOLES & BRIDGING
3/4" = 1'-0"

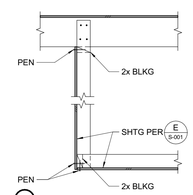

NOTE: LOCATE BRACES TO AVOID CONFLICT W/ MECH DUCTS AS OCCURS, SMD

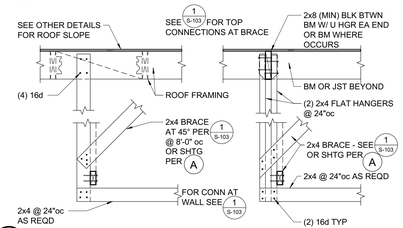

8 TYPICAL SOFFIT FRAMING
3/4" = 1'-0"

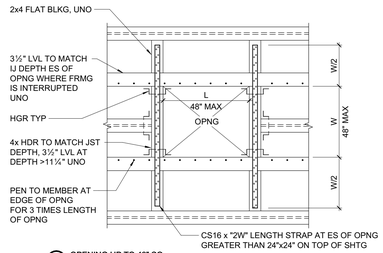

A OPENING UP TO 48" SQ

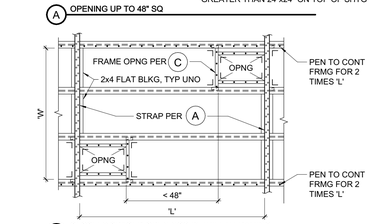

B CLOSELY SPACED OPENINGS BETWEEN FRAMING

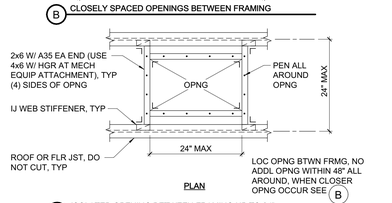

PLAN

C ISOLATED OPENING BETWEEN FRAMING UP TO 24"

5 OPENING IN DIAPHRAGM - IJ
3/4" = 1'-0"

IDENTIFICATION STAMP
DIV. OF THE STATE ARCHITECT
APP: 01-120890 INC:
REVIEWED FOR
SS ☑ FLS ☑ ACS ☑
DATE: 10/25/2023

TLCDARCHITECTURE
520 Third St. #250
Santa Rosa, CA 95401
o: 707.525.5600
f: 707.525.5616
tlcd.com

CONSULTANT:

ZFA STRUCTURAL ENGINEERS
1212 fourth street | suite z
santa rosa ca 95404
zfa job no. 22072
zfa.com
707.526.0992

copyright © 2023

STAMP

REGISTERED PROFESSIONAL ENGINEER CHRIS S. WARNER No. S5413 STRUCTURAL STATE OF CALIFORNIA
10/10/2023

REVISIONS:

Number	Date	Description
1	Date 1	DSA

NVC WINE EDUCATION CENTER

2277 NAPA VALLEJO HWY
NAPA, CA 94558

NAPA VALLEY COLLEGE

DSA PROJECT NUMBER
01-120890

PROJECT NUMBER:
22072

DATE:
4/12/2023

ENGINEER:
JLT / NLG

PROJECT MANAGER:
CEM

TYPICAL WOOD & I-JOIST DETAILS

S-103

THIS DOCUMENT AND THE IDEAS INCORPORATED HEREIN, AS AN INSTRUMENT OF PROFESSIONAL SERVICE, IS THE PROPERTY OF THE ENGINEER AND IS NOT TO BE USED, IN WHOLE OR IN PART FOR ANY OTHER PROJECT WITHOUT THE PRIOR WRITTEN AUTHORIZATION OF THE ENGINEER.

10/10/2023 11:52:12 AM C:\revit_local\22072_NVC_S23C_jackRHLUH.rvt

FRAMING PLAN NOTES:

1. REFER TO SHEETS S-001, S-102 AND S-103 FOR GENERAL NOTES AND TYPICAL DETAILS. THE FOLLOWING DETAIL REFERENCES ARE PROVIDED FOR THE CONTRACTOR'S CONVENIENCE ONLY. ALL GENERAL NOTES AND TYPICAL DETAIL SHEETS NOTED ABOVE ARE APPLICABLE AND SHALL BE FOLLOWED.
2. DIMENSIONS ARE TO FACE OF STUD UNLESS NOTED OTHERWISE. COORDINATE ALL DIMENSIONS WITH ARCHITECTURAL DRAWINGS PRIOR TO CONSTRUCTION. NOTIFY ARCHITECT/ENGINEER OF ANY DISCREPANCIES.
3. MECHANICAL, ELECTRICAL AND PLUMBING PENETRATIONS THROUGH WALLS, ROOFS OR FLOORS SHALL BE PER REFERENCES BELOW UNLESS SHOWN AND DETAILED OTHERWISE ON THE STRUCTURAL PLANS. NOTIFY ARCHITECT/ENGINEER PRIOR TO ANY INSTALLATION NOT CONFORMING TO THESE DETAILS.

   PENETRATIONS THROUGH SHEAR WALLS SHALL BE PER 6/S-102.

   PENETRATIONS THROUGH FLOORS/ROOFS SHALL BE PER 5/S-102 OR 5/S-103
4. ALL EXTERIOR WALLS NOT DESIGNATED AS SHEAR WALLS ON PLANS (INCLUDING WALLS ADJACENT TO SEISMIC GAPS) SHALL BE SHEATHED AS SHEAR WALL TYPE 'A' PER SHEAR WALL SCHEDULE, UNLESS NOTED OTHERWISE.

PLAN LEGEND

SYMBOL	REFERENCE DETAIL	DESCRIPTION
	1/S-102	INDICATES STRUCTURAL WALL.
	D/S-001	INDICATES WOOD POST.
	17/S-102	INDICATES STEEL COLUMN.
	12/S-501	INDICATES "T" PLATE BEAM CONNECTION TO COLUMN.
	11/S-102	INDICATES PANEL EDGE NAILING ALONG FULL LENGTH OF MEMBER.
	D/S-001	INDICATES HANGER.
	7/S-103	INDICATES INVERTED HU HANGER.
		INDICATES LEDGER. SEE PLAN FOR SIZE AND ANCHORAGE.
88		INDICATES GRIDLINE AT FACE OF STUD.
1 S3.1		INDICATES ELEVATION.
MU 1,000#	18/S-102	INDICATES APPROXIMATE LOCATION, SIZE AND MAXIMUM WEIGHT OF MECHANICAL UNIT. SEE MECHANICAL DRAWINGS FOR ANCHORAGE AND ADDITIONAL INFORMATION.
		INDICATES STEP IN ELEVATION, SEE ARCHITECTURAL DRAWINGS.
A	12/S-102	INDICATES TOP PLATE SPLICE. SPLICE TYPE SHALL OCCUR ALONG THE ENTIRE LENGTH OF THE WALL, UNO. PROVIDE SPLICE TYPE 'A' IF NOT NOTED ON PLANS.
A	13/S-102	INDICATES LEDGER/RIM SPLICE. SPLICE TYPE SHALL OCCUR ALONG THE ENTIRE LENGTH OF THE WALL, UNO. PROVIDE SPLICE TYPE 'A' IF NOT NOTED ON PLANS.
A 4'-0"	14/S-102	INDICATES TIE STRAP. SEE SCHEDULE FOR STRAP, NAILING AND LENGTH.
	11/S-102	INDICATES BLOCKED DIAPHRAGM W/ 2 1/2"oc PEN.
W16x26 C=1"		INDICATES BEAM SIZE AND CAMBER. WHERE NO CAMBER IS SPECIFIED FABRICATE BEAM WITH NATURAL CAMBER UP.

TIE STRAP SCHEDULE

MARK	STRAP	MIN. NAILING ES OF ✦	MAX. NAIL SPACING (SEE NOTES #1 & #2) CASE 1	CASE 2 EL	CASE 2 RL	MIN. END LENGTH (EL)
A	CS16	(10) 10d	10d @ 4"oc STGR	FILL ALL NAIL HOLES	10d @ 4"oc STGR	12"
B	CS14	(13) 10d	10d @ 4"oc STGR	FILL ALL NAIL HOLES	10d @ 4"oc STGR	16"
C	CMSTC16	(25) 10d	10d @ 3"oc STGR	FILL ALL NAIL HOLES	10d @ 3"oc STGR	24"
D	CMST14	(33) 10d	10d @ 3½"oc STGR	FILL ALL NAIL HOLES	10d @ 3½"oc STGR	32"
E	CMST12	(43) 10d	10d @ 3½"oc STGR	FILL ALL NAIL HOLES	10d @ 3½"oc STGR	48"

1. CASE 1 APPLIES UNLESS END LENGTH (EL) IS NOTED ON PLANS. WHERE END LENGTH (EL) IS NOTED, SEE CASE 2.
2. AS REQUIRED, PROVIDE CLOSER NAIL SPACING TO MEET MINIMUM NAILING EACH SIDE OF ✦ .

TOP PLATE SPLICE SCHEDULE

MARK	LAP SPLICE (CASE 1)	ALT - STRAP SPLICE (CASE 2)
A	(12) 16d PER 4'-0" MIN LAP	MSTC28
B	(22) 16d PER 4'-0" MIN LAP	MSTC40
C	(26) 16d PER 6'-0" MIN LAP	MSTC52
F	(44) 16d PER 8'-0" MIN LAP	MSTC40 EA SIDE
H		MSTC66 EA SIDE

LEDGER SPLICE SCHEDULE

MARK	CASE	STRAP/PLATE	ALT - CASE	STRAP/PLATE
A	1	MSTA24	2	MSTA24
B	1	MSTA30	2	MSTA30
C	2	MSTI48	3	MSTI60

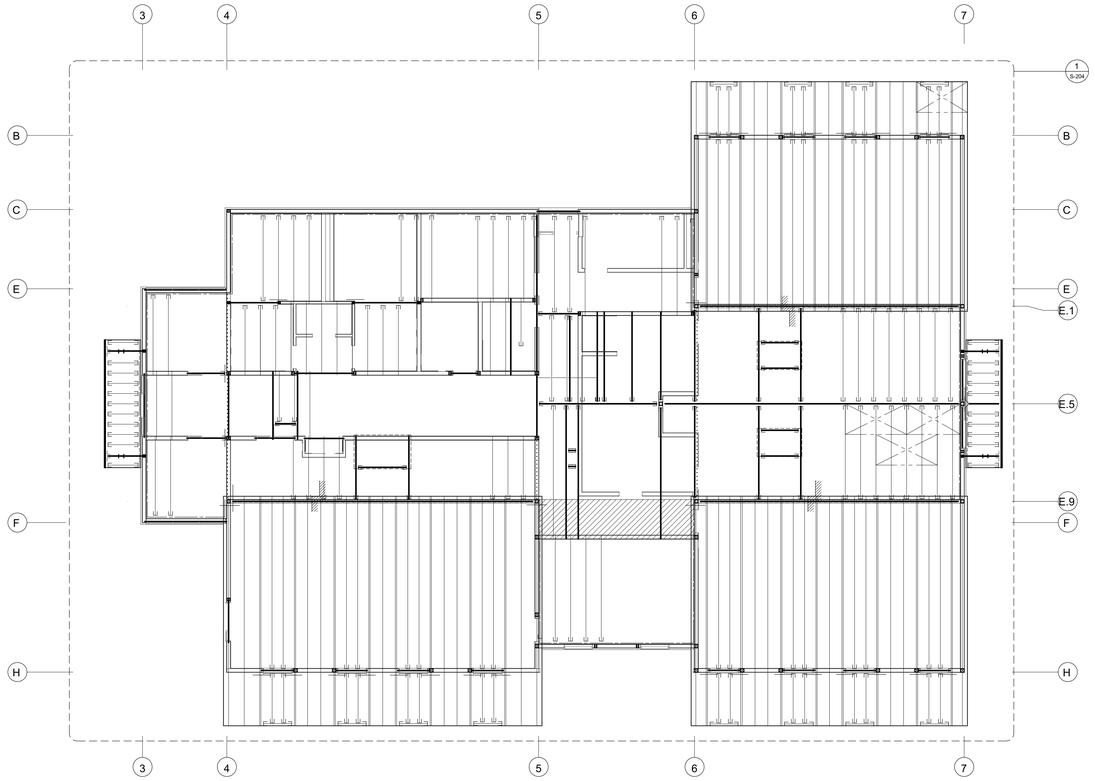

NORTH

PHASE 1 - ROOF FRAMING PLAN

1/8" = 1'-0"

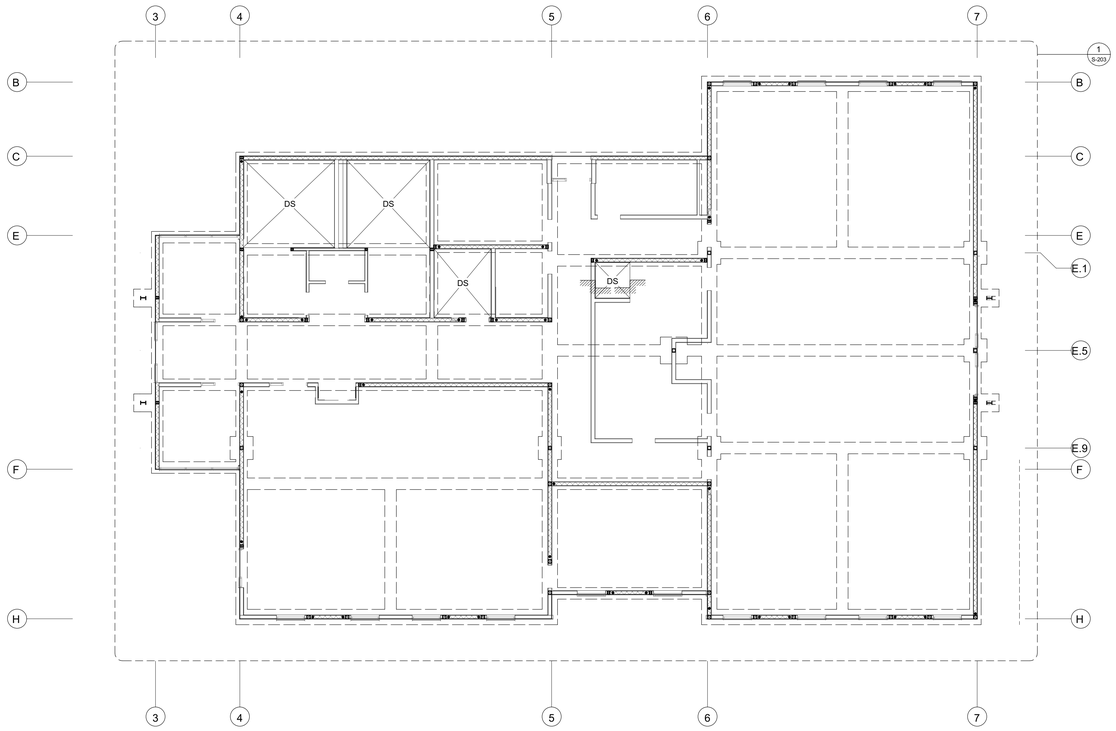

NORTH

PHASE 1 - FOUNDATION PLAN

1/8" = 1'-0"

FOUNDATION PLAN NOTES:

1. REFER TO SHEETS S-001, S-101, S-102 AND S-103 FOR GENERAL NOTES AND TYPICAL DETAILS. THE FOLLOWING DETAIL REFERENCES ARE PROVIDED FOR THE CONTRACTOR'S CONVENIENCE ONLY. ALL GENERAL NOTES AND TYPICAL DETAIL SHEETS NOTED ABOVE ARE APPLICABLE AND SHALL BE FOLLOWED.
2. DIMENSIONS ARE TO FACE OF STUD UNLESS NOTED OTHERWISE. COORDINATE ALL DIMENSIONS WITH ARCHITECTURAL DRAWINGS PRIOR TO CONSTRUCTION. NOTIFY ARCHITECT/ENGINEER OF ANY DISCREPANCIES.
3. SEE DETAILS OR CURB PLAN FOR CURB LOCATIONS. COORDINATE WITH ARCHITECTURAL DRAWINGS PRIOR TO CONSTRUCTION. NOTIFY ARCHITECT/ENGINEER OF ANY DISCREPANCIES. PROVIDE LONGER ANCHOR BOLTS AT CURBS PER C/S-001.
4. ALL EXTERIOR WALLS NOT DESIGNATED AS SHEAR WALLS ON PLANS (INCLUDING WALLS ADJACENT TO SEISMIC GAPS) SHALL BE SHEATHED AS SHEAR WALL TYPE 'A' PER SHEAR WALL SCHEDULE, UNO.
5. PLUMBING AND ELECTRICAL CONDUIT AND GROUND STRAP SHALL NOT BE LAID WITHIN FOUNDATIONS. NO UTILITY PIPES OR CONDUITS SHALL BE LOCATED THRU COLUMN FOOTINGS OR FRAME FOOTINGS. NO PIPES OR CONDUITS THRU SILL PLATES SHALL BE WITHIN 12" OF HOLDOWN BOLTS. NO MECHANICAL, ELECTRICAL, OR PLUMBING OPENINGS SHALL BE LOCATED IN SHEAR WALLS UNLESS SHOWN AND DETAILED ON THE STRUCTURAL DRAWINGS. NO VERTICAL OR HORIZONTAL PIPES OR CONDUITS SHALL BE LOCATED THROUGH STEEL COLUMNS OR STEEL BASE PLATES. PROVIDE FURRING AND/OR THICKENED CONCRETE WHERE REQUIRED TO CLEAR UTILITY SYSTEMS. NOTIFY STRUCTURAL ENGINEER/ARCHITECT PRIOR TO ANY INSTALLATION NOT CONFORMING TO THESE DETAILS.

   PIPES THROUGH FOOTINGS SHALL BE PER 2/S-101 AND 3/S-101.

   PIPES PARALLEL TO FOOTINGS SHALL BE PER 4/S-101.

   PIPES AT SLAB ON GRADE SHALL BE PER 7/S-101.

   PIPES THROUGH WOOD FRAMING SHALL BE PER 2/S-102 AND 16/S-102.

PLAN LEGEND

SYMBOL	REFERENCE DETAIL	DESCRIPTION
	1/S-102	INDICATES STRUCTURAL WALL.
A 10'-0"	7/S-102 E/S-001	INDICATES SHEAR WALL TYPE AND MINIMUM WALL LENGTH. SYMBOL LOCATION INDICATES SHEATHED FACE OF WALL UNLESS NOTED OTHERWISE.
	D/S-001	INDICATES WOOD POST.
✦	8/S-102	INDICATES POST WITH HOLDOWN. POSTS WITH HOLDOWN ARE FULL HEIGHT FROM SILL TO TOP PLATE.
	17/S-102	INDICATES STEEL COLUMN.
		INDICATES FOUNDATION.
CF24		INDICATES CONTINUOUS FOOTING SIZE AND REINFORCING PER SCHEDULE.
F2.0		INDICATES PAD FOOTING SIZE AND REINFORCING PER SCHEDULE.
DS	8/S-101	INDICATES DEPRESSED SLAB, SEE ARCHITECTURAL AND PLUMBING DRAWINGS FOR COMPLETE LOCATIONS, DEPTH AND SLOPE INFORMATION.
	8/S-101	INDICATES STEP IN ELEVATION, SEE ARCHITECTURAL DRAWINGS.
88		INDICATES GRIDLINE.
1 S3.1		INDICATES ELEVATION.

SHEAR WALL SCHEDULE

SW	APA RATED SHEATHING	NAILING (PEN)	ANCHORAGE ⅝"Ø BOLT FDN 2x SILL	3x SILL	AT FRAMING 16d	A35	SDS *	REMARKS
A	15/32" (32/16) EXP 1	10d @ 6"oc	32"oc	48"oc	6"oc	16"oc	12"oc	
B	15/32" (32/16) EXP 1	10d @ 4"oc	24"oc	32"oc	4"oc	16"oc	8"oc	3x MIN AT ALL ADJOINING PANEL EDGES
C	15/32" (32/16) EXP 1	10d @ 3"oc	16"oc	24"oc	3"oc	8"oc	8"oc	
D	15/32" (32/16) EXP 1 BOTH SIDES	10d @ 3"oc	-	12"oc	(2) ROWS @ 2"oc	EA SIDE @ 8"oc, STGR	(2) ROWS @ 6"oc	

* 2x SILL: SDS¼x4½". 3x SILL: SDS¼x6". FOR SDS @ 6"oc OR LESS, PROVIDE 4x BLKG BLW.

CONTINUOUS FOOTING SCHEDULE

MARK	'b'	'd'	REINF 'a'	NOTES
CF18	18"	18"	(2) #5 T&B	PROVIDE #3 TIES @ 9"oc W/ ADDL REINF AT HD PER S/S-102
CF24	24"	18"	(3) #5 T&B	PROVIDE #3 TIES @ 9"oc W/ ADDL REINF AT HD PER S/S-102
CF30	30"	24"	(4) #5 T&B	PROVIDE #3 TIES @ 10"oc W/ ADDL REINF AT HD PER S/S-102

PAD FOOTING SCHEDULE

MARK	SIZE	REINFORCING
F3.0	3'-0" SQ x 18" DEEP	(4) #5 EW T&B
F3.5	3'-6" SQ x 18" DEEP	(5) #5 EW T&B

I - JOIST SCHEDULE

TYPE	MANUFACTURER & MODEL	CODE REPORT NUMBER
IJ9.5	BOISE CASCADE BCI 6000-1.8	ICC ESR - 1336
	LOUISIANA PACIFIC LPI 42 PLUS	ICC ESR - 1305
	WEYERHAEUSER TJI 210	ICC ESR - 1153

IDENTIFICATION STAMP
DIV. OF THE STATE ARCHITECT
APP: 01-120890 INC:
REVIEWED FOR
SS ☑ FLS ☑ ACS ☑
DATE: 10/25/2023

TLCDARCHITECTURE
520 Third St. #250
Santa Rosa, CA 95401
o: 707.525.5600
f: 707.525.5616
tlcd.com

CONSULTANT:

ZFA STRUCTURAL ENGINEERS
1212 fourth street | suite z
santa rosa ca 95404
zfa job no. 22072
zfa.com
707.526.0992

copyright © 2023

STAMP

REGISTERED PROFESSIONAL ENGINEER CHRIS S. WARNER STRUCTURAL STATE OF CALIFORNIA
10/10/2023

REVISIONS:

Number	Date	Description
1	Date 1	DSA

NVC WINE EDUCATION CENTER

2277 NAPA VALLEJO HWY
NAPA, CA 94558

NAPA VALLEY COLLEGE

DSA PROJECT NUMBER: 01-120890
PROJECT NUMBER: 22072
DATE: 4/12/2023
ENGINEER: JLT / NLG
PROJECT MANAGER: CEM

PHASE 1 FOUNDATION AND ROOF FRAMING PLANS

S-201

THIS DOCUMENT AND THE IDEAS INCORPORATED HEREIN, AS AN INSTRUMENT OF PROFESSIONAL SERVICE, IS THE PROPERTY OF THE ENGINEER AND IS NOT TO BE USED, IN WHOLE OR IN PART FOR ANY OTHER PROJECT WITHOUT THE PRIOR WRITTEN AUTHORIZATION OF THE ENGINEER.

10/10/2023 11:52:15 AM C:\revit_local\22072_NVC_S2SC_jack6rGJH.rvt

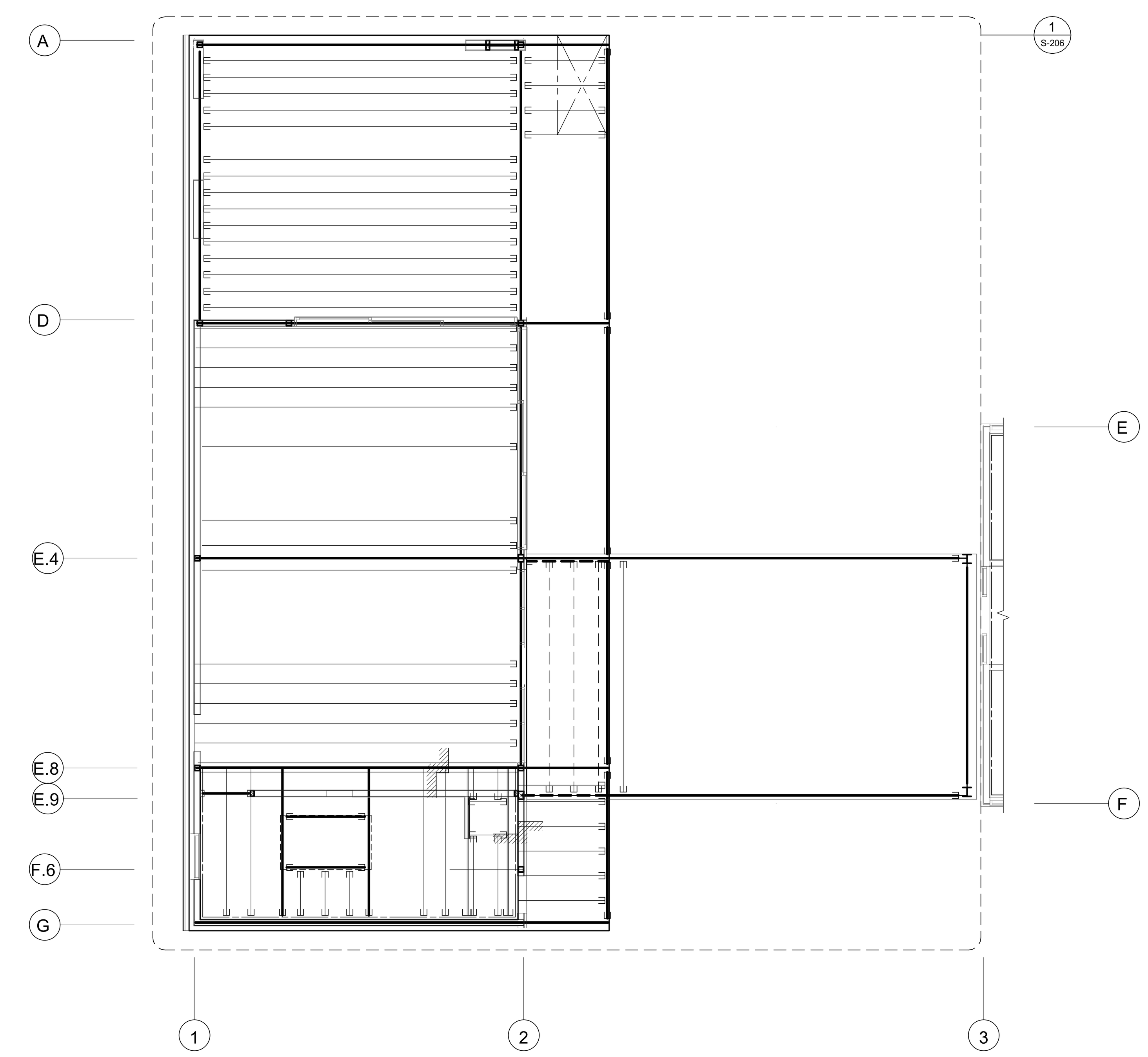

PHASE 2 - ROOF FRAMING PLAN

1/8" = 1'-0"

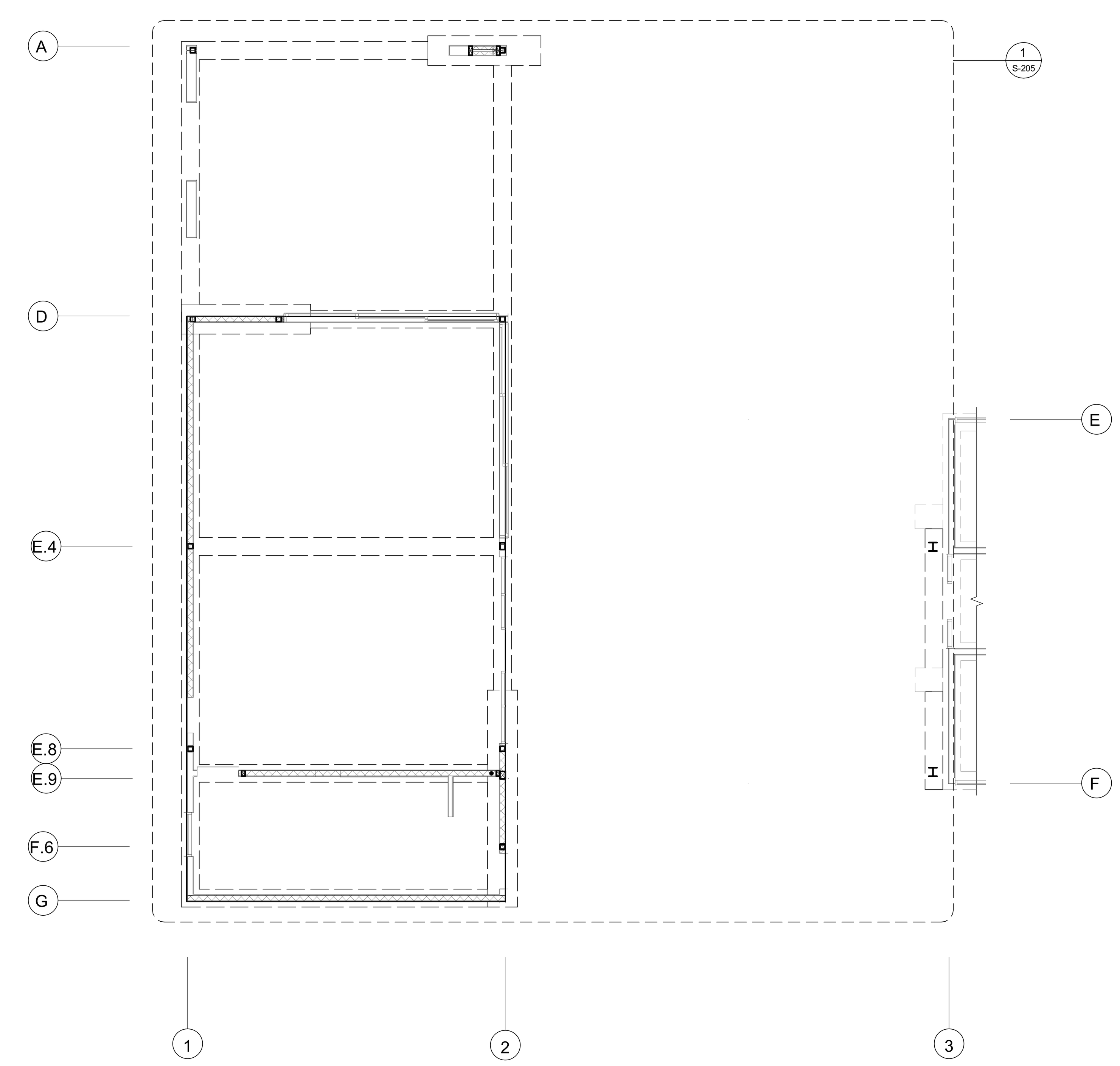

PHASE 2 - FOUNDATION PLAN

1/8" = 1'-0"

C:\revit_local\22072_NVC_S23C_jacktH6UJH.rvt

10/10/2023 11:52:18 AM

FRAMING PLAN NOTES:

1. REFER TO SHEETS S-001, S-101, S-102 AND S-103 FOR GENERAL NOTES AND TYPICAL DETAILS. THE FOLLOWING DETAIL REFERENCES ARE PROVIDED FOR THE CONTRACTOR'S CONVENIENCE ONLY. ALL GENERAL NOTES AND TYPICAL DETAIL SHEETS NOTED ABOVE ARE APPLICABLE AND SHALL BE FOLLOWED.
2. DIMENSIONS ARE TO FACE OF STUD UNLESS NOTED OTHERWISE. COORDINATE ALL DIMENSIONS WITH ARCHITECTURAL DRAWINGS PRIOR TO CONSTRUCTION. NOTIFY ARCHITECT/ENGINEER OF ANY DISCREPANCIES.
3. MECHANICAL, ELECTRICAL AND PLUMBING PENETRATIONS THROUGH WALLS, ROOFS OR FLOORS SHALL BE PER REFERENCES BELOW UNLESS SHOWN AND DETAILED OTHERWISE ON THE STRUCTURAL PLANS. NOTIFY ARCHITECT/ENGINEER PRIOR TO ANY INSTALLATION NOT CONFORMING TO THESE DETAILS.

   PENETRATIONS THROUGH SHEAR WALLS SHALL BE PER 6/S-102.

   PENETRATIONS THROUGH FLOORS/ROOFS SHALL BE PER 5/S-102.
4. ALL EXTERIOR WALLS NOT DESIGNATED AS SHEAR WALLS ON PLANS (INCLUDING WALLS ADJACENT TO SEISMIC GAPS) SHALL BE SHEATHED AS SHEAR WALL TYPE 'A' PER SHEAR WALL SCHEDULE, UNLESS NOTED OTHERWISE.
5. SEISMIC GAPS WHERE NOTED ARE DIMENSIONED CLEAR BETWEEN WALL FINISHES. WALLS AT SEISMIC SEPARATION JOINTS SHALL BE FRAMED AS EXTERIOR WALLS, UNO. THIS GAP TO BE MAINTAINED ENTIRELY CLEAR TO ALLOW FOR DIFFERENTIAL BUILDING MOVEMENT. NO PIPES, CONDUITS, ETCETERA SHALL BE LOCATED WITHIN THE GAP. PROVIDE FLEXIBLE COUPLINGS AT ALL UTILITIES CROSSING SEISMIC GAPS.

PLAN LEGEND

SYMBOL	REFERENCE DETAIL	DESCRIPTION
(double line)	1/S-102	INDICATES STRUCTURAL WALL.
⊠	D/S-001	INDICATES WOOD POST.
O, □, I	17/S-102	INDICATES STEEL COLUMN.
□⊢—	12/S-501	INDICATES "T" PLATE BEAM CONNECTION TO COLUMN.
. . . . .	11/S-102	INDICATES PANEL EDGE NAILING ALONG FULL LENGTH OF MEMBER.
⊏—	D/S-001	INDICATES HANGER.
—— – ——		INDICATES LEDGER. SEE PLAN FOR SIZE AND ANCHORAGE.
(88)—		INDICATES GRIDLINE.
1 / S3.1		INDICATES ELEVATION.
MU 1,000#	18/S-102	INDICATES APPROXIMATE LOCATION, SIZE AND MAXIMUM WEIGHT OF MECHANICAL UNIT. SEE MECHANICAL DRAWINGS FOR ANCHORAGE AND ADDITIONAL INFORMATION.
(step symbol)		INDICATES STEP IN ELEVATION, SEE ARCHITECTURAL DRAWINGS.
[A]	12/S-102	INDICATES TOP PLATE SPLICE. SPLICE TYPE SHALL OCCUR ALONG THE ENTIRE LENGTH OF THE WALL, UNO. PROVIDE SPLICE TYPE 'A' IF NOT NOTED ON PLANS.
◇A	13/S-102	INDICATES LEDGER/RIM SPLICE. SPLICE TYPE SHALL OCCUR ALONG THE ENTIRE LENGTH OF THE WALL, UNO. PROVIDE SPLICE TYPE 'A' IF NOT NOTED ON PLANS.
(A) 4'-0"	14/S-102	INDICATES TIE STRAP. SEE SCHEDULE FOR STRAP, NAILING AND LENGTH.
SFRS	F/S-001	INDICATES LINE LOCATING STEEL ELEMENTS OF THE SEISMIC FORCE RESISTING SYSTEM.

TIE STRAP SCHEDULE

MARK	STRAP	MIN. NAILING ES OF ◆	MAX. NAIL SPACING (SEE NOTES #1 & #2) CASE 1	CASE 2 EL	CASE 2 RL	MIN. END LENGTH (EL)
Ⓐ	CS16	(10) 10d	10d @ 4"oc STGR	FILL ALL NAIL HOLES	10d @ 4"oc STGR	12"
Ⓑ	CS14	(13) 10d	10d @ 4"oc STGR	FILL ALL NAIL HOLES	10d @ 4"oc STGR	16"
Ⓒ	CMSTC16	(25) 10d	10d @ 3"oc STGR	FILL ALL NAIL HOLES	10d @ 3"oc STGR	24"
Ⓓ	CMST14	(33) 10d	10d @ 3½"oc STGR	FILL ALL NAIL HOLES	10d @ 3½"oc STGR	32"
Ⓔ	CMST12	(43) 10d	10d @ 3½"oc STGR	FILL ALL NAIL HOLES	10d @ 3½"oc STGR	48"

1. CASE 1 APPLIES UNLESS END LENGTH (EL) IS NOTED ON PLANS. WHERE END LENGTH (EL) IS NOTED, SEE CASE 2.
2. AS REQUIRED, PROVIDE CLOSER NAIL SPACING TO MEET MINIMUM NAILING EACH SIDE OF ◆ .

TOP PLATE SPLICE SCHEDULE

MARK	LAP SPLICE (CASE 1)	ALT - STRAP SPLICE (CASE 2)
A	(12) 16d PER 4'-0" MIN LAP	MSTC28
B	(22) 16d PER 4'-0" MIN LAP	MSTC40
C	(26) 16d PER 6'-0" MIN LAP	MSTC52
F	(44) 16d PER 8'-0" MIN LAP	MSTC40 EA SIDE
H		MSTC66 EA SIDE

LEDGER SPLICE SCHEDULE

MARK	CASE	STRAP/PLATE	ALT - CASE	STRAP/PLATE
A	1	MSTA24	2	MSTA24
B	1	MSTA30	2	MSTA30
C	2	MSTI48	3	MSTI60

FOUNDATION PLAN NOTES:

1. REFER TO SHEETS S-001, S-101, S-102 AND S-103 FOR GENERAL NOTES AND TYPICAL DETAILS. THE FOLLOWING DETAIL REFERENCES ARE PROVIDED FOR THE CONTRACTOR'S CONVENIENCE ONLY. ALL GENERAL NOTES AND TYPICAL DETAIL SHEETS NOTED ABOVE ARE APPLICABLE AND SHALL BE FOLLOWED.
2. DIMENSIONS ARE TO FACE OF STUD UNLESS NOTED OTHERWISE. COORDINATE ALL DIMENSIONS WITH ARCHITECTURAL DRAWINGS PRIOR TO CONSTRUCTION. NOTIFY ARCHITECT/ENGINEER OF ANY DISCREPANCIES.
3. SEE DETAILS OR CURB PLAN FOR CURB LOCATIONS. COORDINATE WITH ARCHITECTURAL DRAWINGS PRIOR TO CONSTRUCTION. NOTIFY ARCHITECT/ENGINEER OF ANY DISCREPANCIES. PROVIDE LONGER ANCHOR BOLTS AT CURBS PER C/S-001.
4. ALL EXTERIOR WALLS NOT DESIGNATED AS SHEAR WALLS ON PLANS (INCLUDING WALLS ADJACENT TO SEISMIC GAPS) SHALL BE SHEATHED AS SHEAR WALL TYPE 'A' PER SHEAR WALL SCHEDULE, UNO.
5. PLUMBING AND ELECTRICAL CONDUIT AND GROUND STRAP SHALL NOT BE LAID WITHIN FOUNDATIONS. NO UTILITY PIPES OR CONDUITS SHALL BE LOCATED THRU COLUMN FOOTINGS OR FRAME FOOTINGS. NO PIPES OR CONDUITS THRU SILL PLATES SHALL BE WITHIN 12" OF HOLDOWN BOLTS. NO MECHANICAL, ELECTRICAL, OR PLUMBING OPENINGS SHALL BE LOCATED IN SHEAR WALLS UNLESS SHOWN AND DETAILED ON THE STRUCTURAL DRAWINGS. NO VERTICAL OR HORIZONTAL PIPES OR CONDUITS SHALL BE LOCATED THROUGH STEEL FRAMES, STEEL COLUMNS, OR STEEL BASE PLATES. PROVIDE FURRING AND/OR THICKENED CONCRETE WHERE REQUIRED TO CLEAR UTILITY SYSTEMS. NOTIFY STRUCTURAL ENGINEER/ARCHITECT PRIOR TO ANY INSTALLATION NOT CONFORMING TO THESE DETAILS.

   PIPES THROUGH FOOTINGS SHALL BE PER 2/S-101 AND 3/S-101.

   PIPES PARALLEL TO FOOTINGS SHALL BE PER 4/S-101.

   PIPES AT SLAB ON GRADE SHALL BE PER 7/S-101.

   PIPES THROUGH WOOD FRAMING SHALL BE PER 2/S-102 AND 16/S-102
6. CONTRACTOR SHALL DETERMINE FOUNDATION STEP LOCATIONS BASED ON GEOTECHNICAL REPORT, CIVIL, ARCHITECTURAL AND LADSCAPE DRAWINGS. STEP FOOTING PER 5/S-101.
7. SEISMIC GAPS WHERE NOTED ARE DIMENSIONED CLEAR BETWEEN WALL FINISHES. WALLS AT SEISMIC SEPARATION JOINTS SHALL BE FRAMED AS EXTERIOR WALLS, UNO. THIS GAP TO BE MAINTAINED ENTIRELY CLEAR TO ALLOW FOR DIFFERENTIAL BUILDING MOVEMENT. NO PIPES, CONDUITS, ETCETERA SHALL BE LOCATED WITHIN THE GAP. PROVIDE FLEXIBLE COUPLINGS AT ALL UTILITIES CROSSING SEISMIC GAPS.

PLAN LEGEND

SYMBOL	REFERENCE DETAIL	DESCRIPTION
(double line)	1/S-102	INDICATES STRUCTURAL WALL.
(hatched wall) / A 10'-0"	7/S-102 E/S-001	INDICATES SHEAR WALL TYPE AND MINIMUM WALL LENGTH. SYMBOL LOCATION INDICATES SHEATHED FACE OF WALL UNLESS NOTED OTHERWISE.
A ST 20'-0"		INDICATES STRAPPED SHEAR WALL WITH TYPE AND OVERALL WALL LENGTH, SEE ARCHITECTURAL DRAWINGS FOR OPENINGS.
⊠	D/S-001	INDICATES WOOD POST.
⊠ •	8/S-102	INDICATES POST WITH HOLDOWN. POSTS WITH HOLDOWN ARE FULL HEIGHT FROM SILL TO TOP PLATE.
O, □, I	17/S-102	INDICATES STEEL COLUMN.
(dashed outline)		INDICATES FOUNDATION.
CF24		INDICATES CONTINUOUS FOOTING SIZE AND REINFORCING PER SCHEDULE.
F2.0		INDICATES PAD FOOTING SIZE AND REINFORCING PER SCHEDULE.
DS	8/S-101	INDICATES DEPRESSED SLAB, SEE ARCHITECTURAL AND PLUMBING DRAWINGS FOR COMPLETE LOCATIONS, DEPTH AND SLOPE INFORMATION.
(step symbol)		INDICATES STEP IN ELEVATION, SEE ARCHITECTURAL DRAWINGS.
(88)—		INDICATES GRIDLINE.
1 / S3.1		INDICATES ELEVATION.
SFRS	F/S-001	INDICATES LINE LOCATING STEEL ELEMENTS OF THE SEISMIC FORCE RESISTING SYSTEM.

SHEAR WALL SCHEDULE

SW	APA RATED SHEATHING	NAILING (PEN)	ANCHORAGE ⅝"ø BOLT FDN 2x SILL	⅝"ø BOLT FDN 3x SILL	AT FRAMING 16d	AT FRAMING A35	AT FRAMING SDS *	REMARKS
A	15/32" (32/16) EXP 1	10d @ 6"oc	32"oc	48"oc	6"oc	16"oc	12"oc	
B	15/32" (32/16) EXP 1	10d @ 4"oc	24"oc	32"oc	4"oc	16"oc	8"oc	3x MIN AT ALL ADJOINING PANEL EDGES
C	15/32" (32/16) EXP 1	10d @ 3"oc	16"oc	24"oc	3"oc	8"oc	8"oc	
D	15/32" (32/16) EXP 1 BOTH SIDES	10d @ 3"oc	-	12"oc	(2) ROWS @ 2"oc	EA SIDE @ 8"oc, STGR	(2) ROWS @ 6"oc	

* 2x SILL: SDS¼x4½". 3x SILL: SDS¼x6". FOR SDS @ 6"oc OR LESS, PROVIDE 4x BLKG BLW.

CONTINUOUS FOOTING SCHEDULE

MARK	'b'	'd'	REINF 'a'	NOTES
CF18	18"	18"	(2) #5 T&B	PROVIDE #3 TIES @ 9"oc W/ ADDL REINF AT HD PER 8/S-102
CF24	24"	18"	(3) #5 T&B	PROVIDE #3 TIES @ 9"oc W/ ADDL REINF AT HD PER 8/S-102
CF30	30"	24"	(4) #5 T&B	PROVIDE #3 TIES @ 10"oc W/ ADDL REINF AT HD PER 8/S-102

IDENTIFICATION STAMP
DIV. OF THE STATE ARCHITECT
APP: 01-120890 INC:
REVIEWED FOR
SS ☑ FLS ☑ ACS ☑
DATE: 10/25/2023

TLCDARCHITECTURE
520 Third St. #250
Santa Rosa, CA 95401
o: 707.525.5600
f: 707.525.5616
tlcd.com

CONSULTANT:

ZFA STRUCTURAL ENGINEERS
1212 fourth street | suite z
santa rosa ca 95404
zfa job no. 22072
zfa.com
707.526.0992

copyright © 2023

STAMP:

REGISTERED PROFESSIONAL ENGINEER CHRIS S. WARNER No. S4613 STRUCTURAL STATE OF CALIFORNIA

10/10/2023

REVISIONS:

Number	Date	Description
1	Date 1	DSA

NVC WINE EDUCATION CENTER

2277 NAPA VALLEJO HWY
NAPA, CA 94558

NAPA VALLEY COLLEGE

DSA PROJECT NUMBER
01-120890

PROJECT NUMBER:
22072

DATE:
4/12/2023

ENGINEER:
JLT / NLG

PROJECT MANAGER:
CEM

PHASE 2 FOUNDATION AND ROOF FRAMING PLANS

S-202

THIS DOCUMENT AND THE IDEAS INCORPORATED HEREIN, AS AN INSTRUMENT OF PROFESSIONAL SERVICE, IS THE PROPERTY OF THE ENGINEER AND IS NOT TO BE USED, IN WHOLE OR IN PART FOR ANY OTHER PROJECT WITHOUT THE PRIOR WRITTEN AUTHORIZATION OF THE ENGINEER.

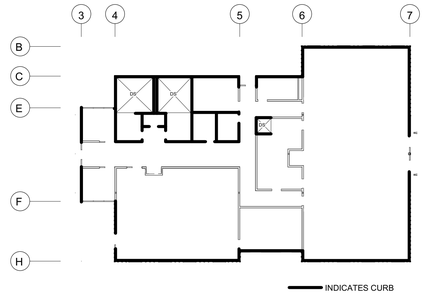

PHASE 1 - CURB PLAN

NOT TO SCALE

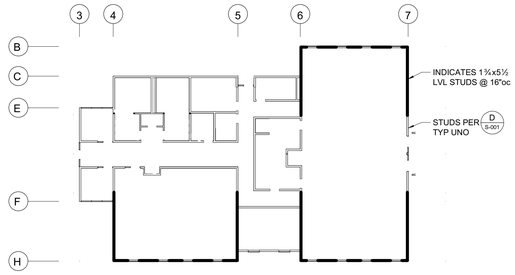

PHASE 1 - STUD PLAN

1" = 20'-0"

NOTE: SEE SHEET S-201 FOR FRAMING PLAN NOTES, LEGEND, & SCHEDULES

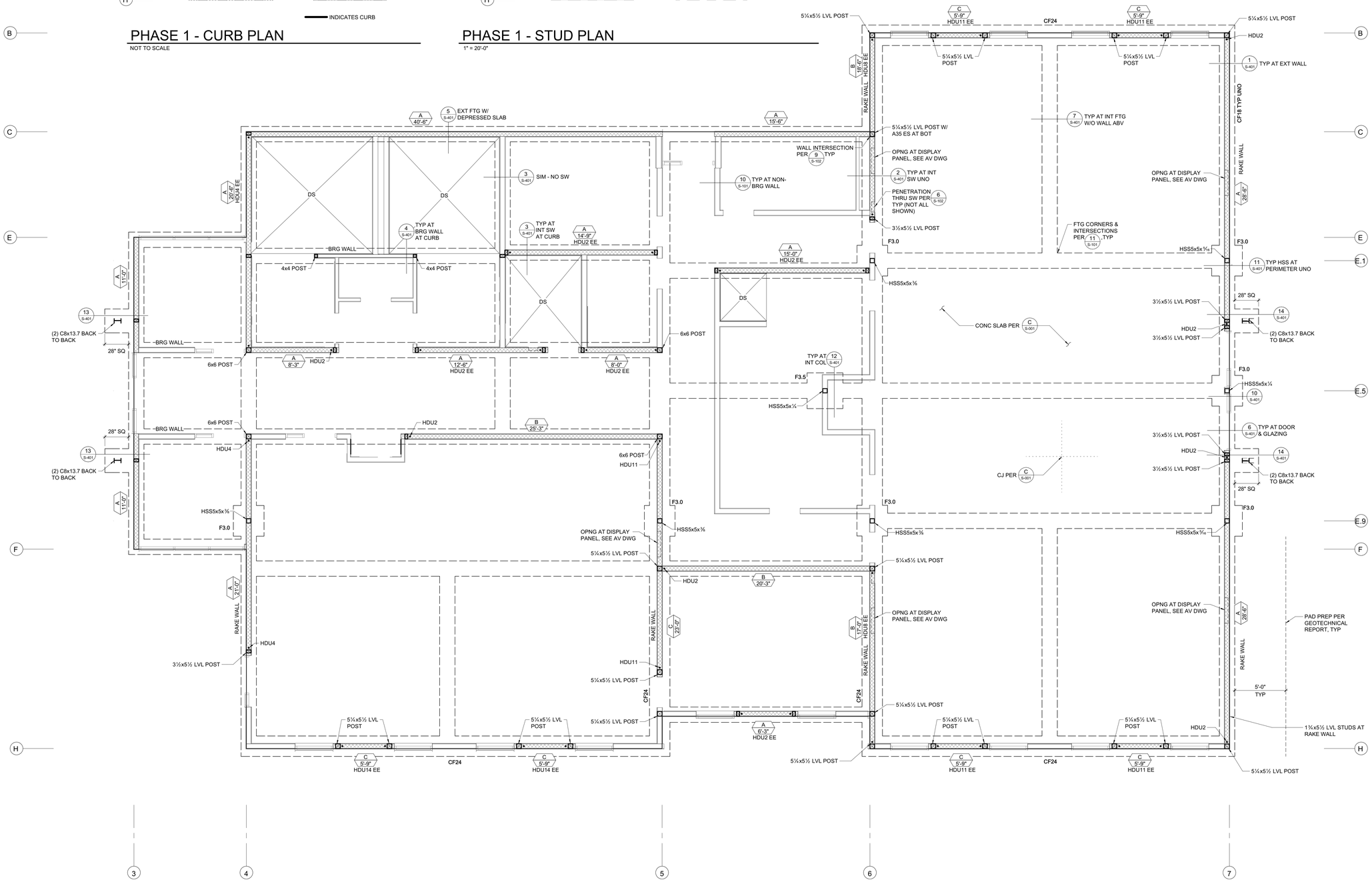

PHASE 1 - ENLARGED FOUNDATION PLAN

1/4" = 1'-0"

NORTH

IDENTIFICATION STAMP
DIV. OF THE STATE ARCHITECT
APP: 01-120890 INC:
REVIEWED FOR
SS ☑ FLS ☑ ACS ☑
DATE: 10/25/2023

TLCDARCHITECTURE
520 Third St. #250
Santa Rosa, CA 95401
o: 707.525.5600
f: 707.525.5616
tlcd.com

CONSULTANT:

ZFA STRUCTURAL ENGINEERS
1212 fourth street | suite z
santa rosa ca 95404
zfa job no. 22072
zfa.com
707.526.0992

copyright © 2023

STAMP

10/10/2023

REVISIONS:

Number	Date	Description
1	Date 1	DSA

NVC WINE EDUCATION CENTER

2277 NAPA VALLEJO HWY
NAPA, CA 94558

NAPA VALLEY COLLEGE

DSA PROJECT NUMBER: 01-120890
PROJECT NUMBER: 22072
DATE: 4/12/2023
ENGINEER: JLT / NLG
PROJECT MANAGER: CEM

PHASE 1 ENLARGED FOUNDATION PLAN

S-203

THIS DOCUMENT AND THE IDEAS INCORPORATED HEREIN, AS AN INSTRUMENT OF PROFESSIONAL SERVICE, IS THE PROPERTY OF THE ENGINEER AND IS NOT TO BE USED, IN WHOLE OR IN PART FOR ANY OTHER PROJECT WITHOUT THE PRIOR WRITTEN AUTHORIZATION OF THE ENGINEER.

10/10/2023 11:52:20 AM C:\revit_local\22072_NVC_S23C_jackh6UJH-r4

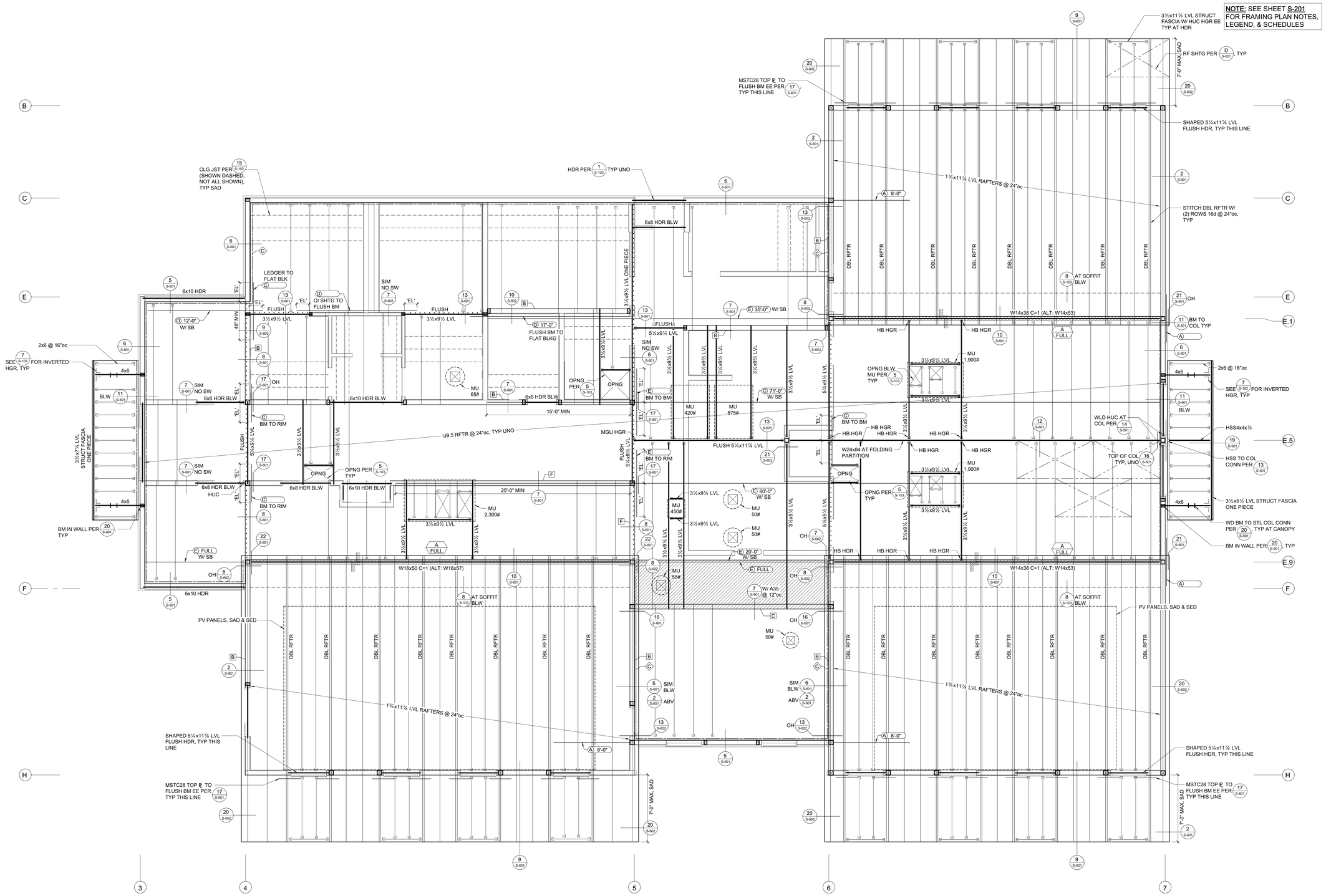

NORTH

PHASE 1 - ENLARGED ROOF FRAMING PLAN

1/4" = 1'-0"

IDENTIFICATION STAMP
DIV. OF THE STATE ARCHITECT
APP: 01-120890 INC:
REVIEWED FOR
SS ☑ FLS ☑ ACS ☑
DATE: 10/25/2023

TLCDARCHITECTURE
520 Third St. #250
Santa Rosa, CA 95401
o: 707.525.5600
f: 707.525.5616
tlcd.com

CONSULTANT:

ZFA STRUCTURAL ENGINEERS
1212 fourth street | suite z
santa rosa ca 95404
zfa job no. 22072
zfa.com
707.526.0992

copyright © 2023

STAMP:

10/10/2023

REVISIONS:

Number	Date	Description

NVC WINE EDUCATION CENTER

2277 NAPA VALLEJO HWY
NAPA, CA 94558

NAPA VALLEY COLLEGE

DSA PROJECT NUMBER: 01-120890
PROJECT NUMBER: 22072
DATE: 4/12/2023
ENGINEER: JLT / NLG
PROJECT MANAGER: CEM

PHASE 1 ENLARGED ROOF FRAMING PLAN

S-204

THIS DOCUMENT AND THE IDEAS INCORPORATED HEREIN, AS AN INSTRUMENT OF PROFESSIONAL SERVICE, IS THE PROPERTY OF THE ENGINEER AND IS NOT TO BE USED, IN WHOLE OR IN PART FOR ANY OTHER PROJECT WITHOUT THE PRIOR WRITTEN AUTHORIZATION OF THE ENGINEER.

10/10/2023 11:52:24 AM C:\revit_local\22072_NVC_S23C_jadd#6UJH.rvt

FOUNDATION PLAN NOTES:

1. REFER TO SHEETS S-001, S-101, S-102 AND S-103 FOR GENERAL NOTES AND TYPICAL DETAILS. THE FOLLOWING DETAIL REFERENCES ARE PROVIDED FOR THE CONTRACTOR'S CONVENIENCE ONLY. ALL GENERAL NOTES AND TYPICAL DETAIL SHEETS NOTED ABOVE ARE APPLICABLE AND SHALL BE FOLLOWED.
2. DIMENSIONS ARE TO FACE OF STUD UNLESS NOTED OTHERWISE. COORDINATE ALL DIMENSIONS WITH ARCHITECTURAL DRAWINGS PRIOR TO CONSTRUCTION. NOTIFY ARCHITECT/ENGINEER OF ANY DISCREPANCIES.
3. SEE DETAILS OR CURB PLAN FOR CURB LOCATIONS. COORDINATE WITH ARCHITECTURAL DRAWINGS PRIOR TO CONSTRUCTION. NOTIFY ARCHITECT/ENGINEER OF ANY DISCREPANCIES. PROVIDE LONGER ANCHOR BOLTS AT CURBS PER C/S-001.
4. ALL EXTERIOR WALLS NOT DESIGNATED AS SHEAR WALLS ON PLANS (INCLUDING WALLS ADJACENT TO SEISMIC GAPS) SHALL BE SHEATHED AS SHEAR WALL TYPE "A" PER SHEAR WALL SCHEDULE, UNO.
5. PLUMBING AND ELECTRICAL CONDUIT AND GROUND STRAP SHALL NOT BE LAID WITHIN FOUNDATIONS. NO UTILITY PIPES OR CONDUITS SHALL BE LOCATED THRU COLUMN FOOTINGS OR FRAME FOOTINGS. NO PIPES OR CONDUITS THRU SILL PLATES SHALL BE WITHIN 12" OF HOLDOWN BOLTS. NO MECHANICAL, ELECTRICAL, OR PLUMBING OPENINGS SHALL BE LOCATED IN SHEAR WALLS UNLESS SHOWN AND DETAILED ON THE STRUCTURAL DRAWINGS. NO VERTICAL OR HORIZONTAL PIPES OR CONDUITS SHALL BE LOCATED THROUGH STEEL FRAMES, STEEL COLUMNS, OR STEEL BASE PLATES. PROVIDE FURRING AND/OR THICKENED CONCRETE WHERE REQUIRED TO CLEAR UTILITY SYSTEMS. NOTIFY STRUCTURAL ENGINEER/ARCHITECT PRIOR TO ANY INSTALLATION NOT CONFORMING TO THESE DETAILS.
   - PIPES THROUGH FOOTINGS SHALL BE PER 2/S-101 AND 3/S-101.
   - PIPES PARALLEL TO FOOTINGS SHALL BE PER 4/S-101.
   - PIPES AT SLAB ON GRADE SHALL BE PER 7/S-101.
   - PIPES THROUGH WOOD FRAMING SHALL BE PER 2/S-102 AND 16/S-102
6. CONTRACTOR SHALL DETERMINE FOUNDATION STEP LOCATIONS BASED ON GEOTECHNICAL REPORT, CIVIL, ARCHITECTURAL AND LADSCAPE DRAWINGS. STEP FOOTING PER 5/S-101.
7. SEISMIC GAPS WHERE NOTED ARE DIMENSIONED CLEAR BETWEEN WALL FINISHES. WALLS AT SEISMIC SEPARATION JOINTS SHALL BE FRAMED AS EXTERIOR WALLS, UNO. THIS GAP TO BE MAINTAINED ENTIRELY CLEAR TO ALLOW FOR DIFFERENTIAL BUILDING MOVEMENT. NO PIPES, CONDUITS, ETCETERA SHALL BE LOCATED WITHIN THE GAP. PROVIDE FLEXIBLE COUPLINGS AT ALL UTILITIES CROSSING SEISMIC GAPS.

PLAN LEGEND

SYMBOL	REFERENCE DETAIL	DESCRIPTION
	1/S-102	INDICATES STRUCTURAL WALL.
A 10'-0"	7/S-102 E/S-001	INDICATES SHEAR WALL TYPE AND MINIMUM WALL LENGTH. SYMBOL LOCATION INDICATES SHEATHED FACE OF WALL UNLESS NOTED OTHERWISE.
A ST 20'-0"		INDICATES STRAPPED SHEAR WALL WITH TYPE AND OVERALL WALL LENGTH, SEE ARCHITECTURAL DRAWINGS FOR OPENINGS.
	D/S-001	INDICATES WOOD POST.
•	8/S-102	INDICATES POST WITH HOLDOWN. POSTS WITH HOLDOWN ARE FULL HEIGHT FROM SILL TO TOP PLATE.
	17/S-102	INDICATES STEEL COLUMN.
		INDICATES FOUNDATION.
CF24		INDICATES CONTINUOUS FOOTING SIZE AND REINFORCING PER SCHEDULE.
F2.0		INDICATES PAD FOOTING SIZE AND REINFORCING PER SCHEDULE.
DS	8/S-101	INDICATES DEPRESSED SLAB, SEE ARCHITECTURAL AND PLUMBING DRAWINGS FOR COMPLETE LOCATIONS, DEPTH AND SLOPE INFORMATION.
		INDICATES STEP IN ELEVATION, SEE ARCHITECTURAL DRAWINGS.
88		INDICATES GRIDLINE.
1 S3.1		INDICATES ELEVATION.
SFRS	F/S-001	INDICATES LINE LOCATING STEEL ELEMENTS OF THE SEISMIC FORCE RESISTING SYSTEM.

SHEAR WALL SCHEDULE

SW	APA RATED SHEATHING	NAILING (PEN)	ANCHORAGE: ½"Ø BOLT FDN 2x SILL	½"Ø BOLT FDN 3x SILL	AT FRAMING 16d	AT FRAMING A35	AT FRAMING SDS *	REMARKS
A	15/32" (32/16) EXP 1	10d @ 6"oc	32"oc	48"oc	6"oc	16"oc	12"oc	
B	15/32" (32/16) EXP 1	10d @ 4"oc	24"oc	32"oc	4"oc	16"oc	8"oc	3x MIN AT ALL ADJOINING PANEL EDGES
C	15/32" (32/16) EXP 1	10d @ 3"oc	16"oc	24"oc	3"oc	8"oc	8"oc	
D	15/32" (32/16) EXP 1 **BOTH SIDES**	10d @ 3"oc	-	12"oc	(2) ROWS @ 2"oc	EA SIDE @ 8"oc, STGR	(2) ROWS @ 6"oc	

* 2x SILL: SDS ¼x4½". 3x SILL: SDS ¼x6". FOR SDS @ 6"oc OR LESS, PROVIDE 4x BLKG BLW.

CONTINUOUS FOOTING SCHEDULE

MARK	'b'	'd'	REINF 'a'	NOTES
CF18	18"	18"	(2) #5 T&B	PROVIDE #3 TIES @ 9"oc W/ ADDL REINF AT HD PER 8/S-102
CF24	24"	18"	(3) #5 T&B	PROVIDE #3 TIES @ 9"oc W/ ADDL REINF AT HD PER 8/S-102
CF30	30"	24"	(4) #5 T&B	PROVIDE #3 TIES @ 10"oc W/ ADDL REINF AT HD PER 8/S-102

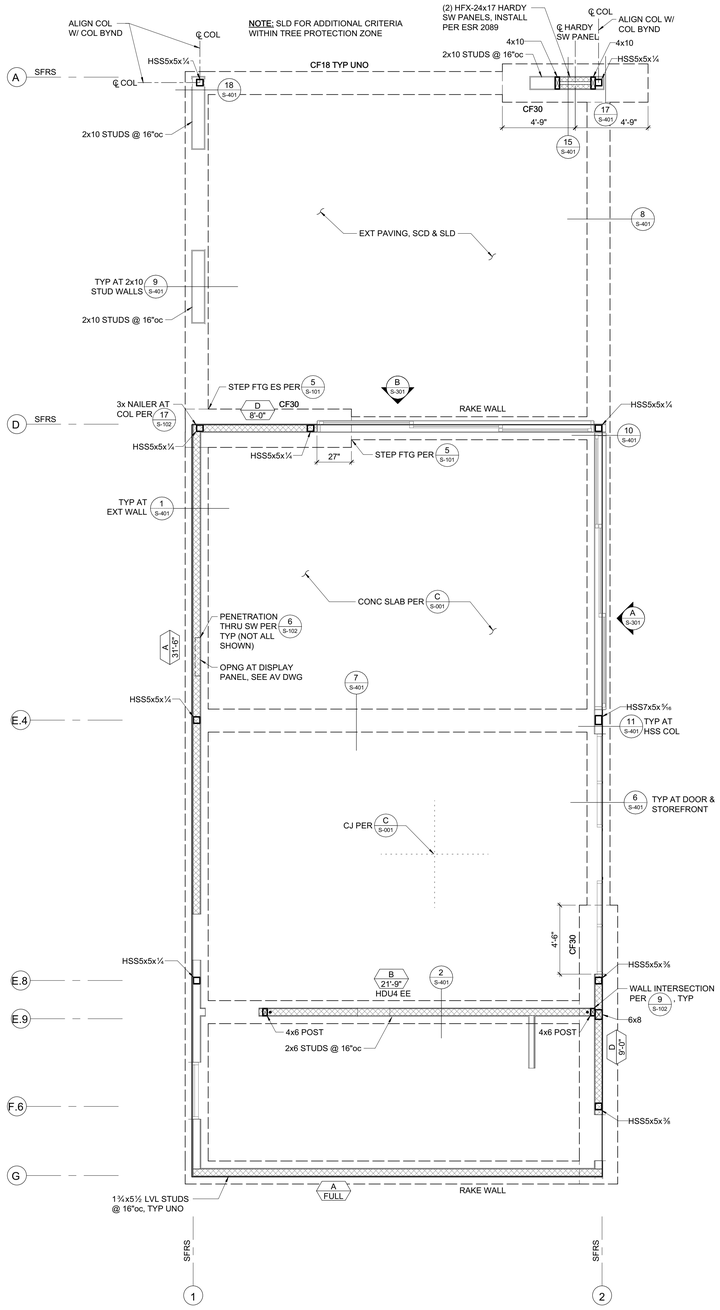

PHASE 2 - ENLARGED FOUNDATION PLAN

1/4" = 1'-0"

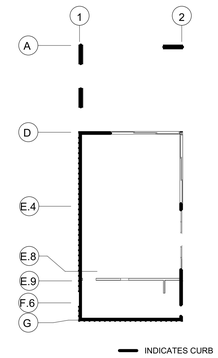

PHASE 2 - CURB PLAN

NOT TO SCALE

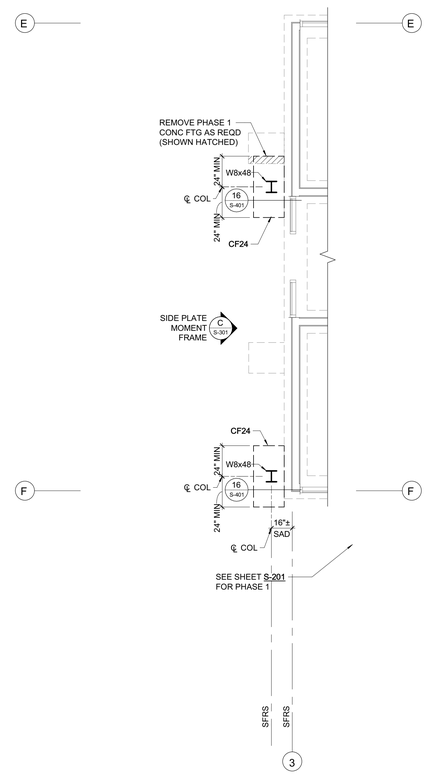

IDENTIFICATION STAMP
DIV. OF THE STATE ARCHITECT
APP: 01-120890 INC:
REVIEWED FOR
SS ☑ FLS ☑ ACS ☑
DATE: 10/25/2023

TLCDARCHITECTURE
520 Third St. #250
Santa Rosa, CA 95401
o: 707.525.5600
f: 707.525.5616
tlcd.com

CONSULTANT:

ZFA STRUCTURAL ENGINEERS
1212 fourth street | suite z
santa rosa ca 95404
zfa job no. 22072
zfa.com
707.526.0992

copyright © 2023

STAMP
CHRIS S. WARREN
STRUCTURAL
STATE OF CALIFORNIA
10/10/2023

REVISIONS:

Number	Date	Description
1	Date 1	DSA

NVC WINE EDUCATION CENTER

2277 NAPA VALLEJO HWY
NAPA, CA 94558

NAPA VALLEY COLLEGE

DSA PROJECT NUMBER
01-120890

PROJECT NUMBER:
22072

DATE:
4/12/2023

ENGINEER:
JLT / NLG

PROJECT MANAGER:
CEM

PHASE 2 ENLARGED FOUNDATION PLAN

S-205

THIS DOCUMENT AND THE IDEAS INCORPORATED HEREIN, AS AN INSTRUMENT OF PROFESSIONAL SERVICE, IS THE PROPERTY OF THE ENGINEER AND IS NOT TO BE USED, IN WHOLE OR IN PART FOR ANY OTHER PROJECT WITHOUT THE PRIOR WRITTEN AUTHORIZATION OF THE ENGINEER.

10/10/2023 11:52:27 AM C:\revit_local\22072_NVC_S23C_jadsRBJ8.rvt

FRAMING PLAN NOTES:

1. REFER TO SHEETS S-001, S-101, S-102 AND S-103 FOR GENERAL NOTES AND TYPICAL DETAILS. THE FOLLOWING DETAIL REFERENCES ARE PROVIDED FOR THE CONTRACTOR'S CONVENIENCE ONLY. ALL GENERAL NOTES AND TYPICAL DETAIL SHEETS NOTED ABOVE ARE APPLICABLE AND SHALL BE FOLLOWED.

2. DIMENSIONS ARE TO FACE OF STUD UNLESS NOTED OTHERWISE. COORDINATE ALL DIMENSIONS WITH ARCHITECTURAL DRAWINGS PRIOR TO CONSTRUCTION. NOTIFY ARCHITECT/ENGINEER OF ANY DISCREPANCIES.

3. MECHANICAL, ELECTRICAL AND PLUMBING PENETRATIONS THROUGH WALLS, ROOFS OR FLOORS SHALL BE PER REFERENCES BELOW UNLESS SHOWN AND DETAILED OTHERWISE ON THE STRUCTURAL PLANS. NOTIFY ARCHITECT/ENGINEER PRIOR TO ANY INSTALLATION NOT CONFORMING TO THESE DETAILS.

   PENETRATIONS THROUGH SHEAR WALLS SHALL BE PER 6/S-102.

   PENETRATIONS THROUGH FLOORS/ROOFS SHALL BE PER 5/S-102.

4. ALL EXTERIOR WALLS NOT DESIGNATED AS SHEAR WALLS ON PLANS (INCLUDING WALLS ADJACENT TO SEISMIC GAPS) SHALL BE SHEATHED AS SHEAR WALL TYPE 'A' PER SHEAR WALL SCHEDULE, UNLESS NOTED OTHERWISE.

5. SEISMIC GAPS WHERE NOTED ARE DIMENSIONED CLEAR BETWEEN WALL FINISHES. WALLS AT SEISMIC SEPARATION JOINTS SHALL BE FRAMED AS EXTERIOR WALLS, UNO. THIS GAP TO BE MAINTAINED ENTIRELY CLEAR TO ALLOW FOR DIFFERENTIAL BUILDING MOVEMENT. NO PIPES, CONDUITS, ETCETERA SHALL BE LOCATED WITHIN THE GAP. PROVIDE FLEXIBLE COUPLINGS AT ALL UTILITIES CROSSING SEISMIC GAPS.

PLAN LEGEND

SYMBOL	REFERENCE DETAIL	DESCRIPTION
	1/S-102	INDICATES STRUCTURAL WALL.
	D/S-001	INDICATES WOOD POST.
	17/S-102	INDICATES STEEL COLUMN.
	12/S-501	INDICATES "T" PLATE BEAM CONNECTION TO COLUMN.
	11/S-102	INDICATES PANEL EDGE NAILING ALONG FULL LENGTH OF MEMBER.
	D/S-001	INDICATES HANGER.
		INDICATES LEDGER. SEE PLAN FOR SIZE AND ANCHORAGE.
88		INDICATES GRIDLINE.
1 S3.1		INDICATES ELEVATION.
MU 1,000#	18/S-102	INDICATES APPROXIMATE LOCATION, SIZE AND MAXIMUM WEIGHT OF MECHANICAL UNIT. SEE MECHANICAL DRAWINGS FOR ANCHORAGE AND ADDITIONAL INFORMATION.
		INDICATES STEP IN ELEVATION, SEE ARCHITECTURAL DRAWINGS.
A	12/S-102	INDICATES TOP PLATE SPLICE. SPLICE TYPE SHALL OCCUR ALONG THE ENTIRE LENGTH OF THE WALL, UNO. PROVIDE SPLICE TYPE 'A' IF NOT NOTED ON PLANS.
A	13/S-102	INDICATES LEDGER/RIM SPLICE. SPLICE TYPE SHALL OCCUR ALONG THE ENTIRE LENGTH OF THE WALL, UNO. PROVIDE SPLICE TYPE 'A' IF NOT NOTED ON PLANS.
A 4'-0"	14/S-102	INDICATES TIE STRAP. SEE SCHEDULE FOR STRAP, NAILING AND LENGTH.
SFRS	F/S-001	INDICATES LINE LOCATING STEEL ELEMENTS OF THE SEISMIC FORCE RESISTING SYSTEM.

TIE STRAP SCHEDULE

MARK	STRAP	MIN. NAILING ES OF ✦	MAX. NAIL SPACING (SEE NOTES #1 & #2) CASE 1	CASE 2 EL	CASE 2 RL	MIN. END LENGTH (EL)
A	CS16	(10) 10d	10d @ 4"oc STGR	FILL ALL NAIL HOLES	10d @ 4"oc STGR	12"
B	CS14	(13) 10d	10d @ 4"oc STGR	FILL ALL NAIL HOLES	10d @ 4"oc STGR	16"
C	CMSTC16	(25) 10d	10d @ 3"oc STGR	FILL ALL NAIL HOLES	10d @ 3"oc STGR	24"
D	CMST14	(33) 10d	10d @ 3½"oc STGR	FILL ALL NAIL HOLES	10d @ 3½"oc STGR	32"
E	CMST12	(43) 10d	10d @ 3½"oc STGR	FILL ALL NAIL HOLES	10d @ 3½"oc STGR	48"

1. CASE 1 APPLIES UNLESS END LENGTH (EL) IS NOTED ON PLANS. WHERE END LENGTH (EL) IS NOTED, SEE CASE 2.

2. AS REQUIRED, PROVIDE CLOSER NAIL SPACING TO MEET MINIMUM NAILING EACH SIDE OF ✦ .

TOP PLATE SPLICE SCHEDULE

MARK	LAP SPLICE (CASE 1)	ALT - STRAP SPLICE (CASE 2)
A	(12) 16d PER 4'-0" MIN LAP	MSTC28
B	(22) 16d PER 4'-0" MIN LAP	MSTC40
C	(26) 16d PER 6'-0" MIN LAP	MSTC52
F	(44) 16d PER 8'-0" MIN LAP	MSTC40 EA SIDE
H		MSTC66 EA SIDE

LEDGER SPLICE SCHEDULE

MARK	CASE	STRAP/PLATE	ALT - CASE	STRAP/PLATE
A	1	MSTA24	2	MSTA24
B	1	MSTA30	2	MSTA30
C	2	MSTI48	3	MSTI60

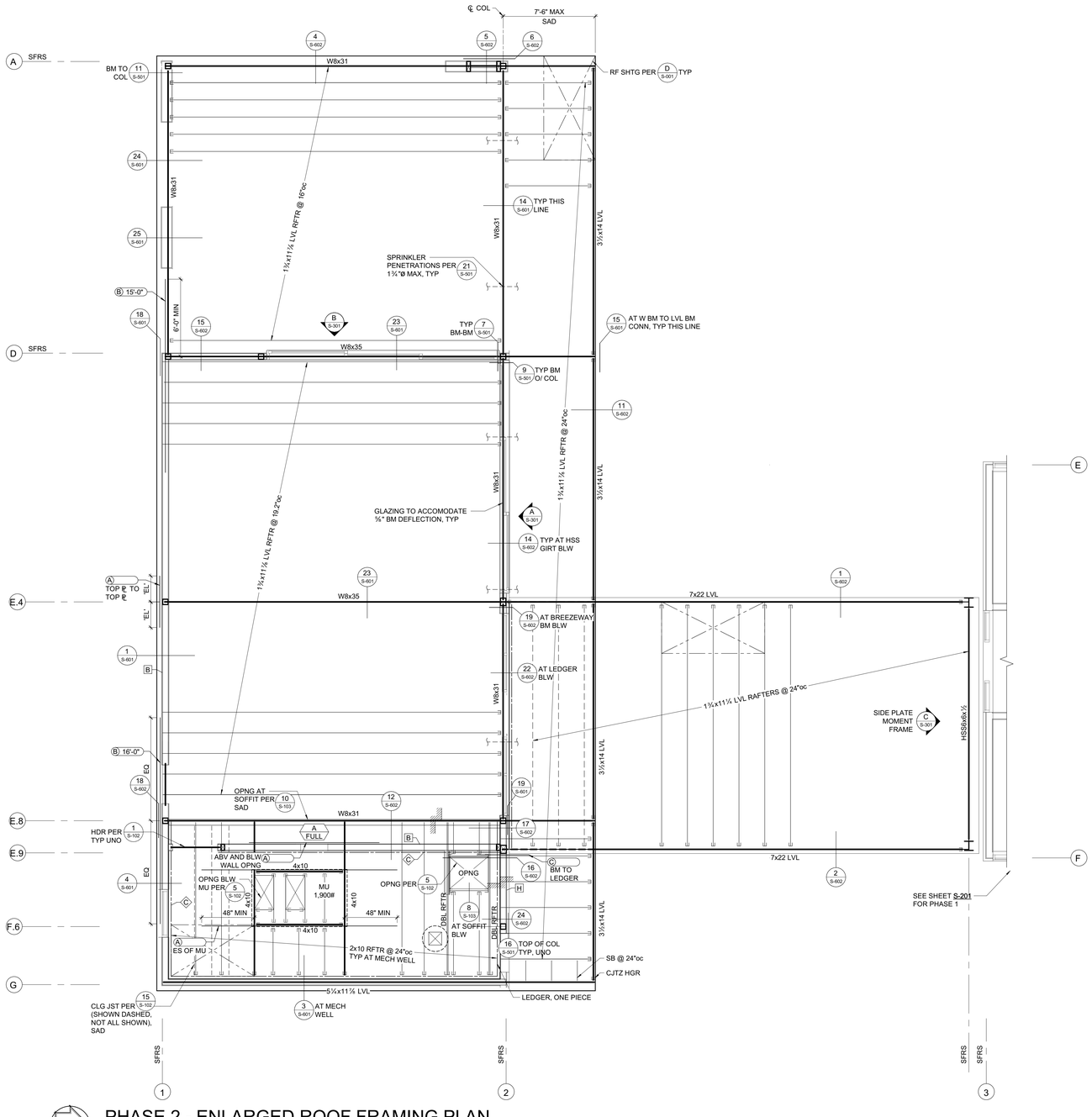

PHASE 2 - ENLARGED ROOF FRAMING PLAN

1/4" = 1'-0"

IDENTIFICATION STAMP
DIV. OF THE STATE ARCHITECT
APP: 01-120890 INC:
REVIEWED FOR
SS ☑ FLS ☑ ACS ☑
DATE: 10/25/2023

TLCDARCHITECTURE
520 Third St. #250
Santa Rosa, CA 95401
o: 707.525.5600
f: 707.525.5616
tlcd.com

CONSULTANT:

ZFA STRUCTURAL ENGINEERS
1212 fourth street | suite z
santa rosa ca 95404
zfa job no. 22072
zfa.com
707.526.0992

copyright © 2023

STAMP
CHRIS S. WARNER
STRUCTURAL
STATE OF CALIFORNIA
10/10/2023

REVISIONS:

Number	Date	Description
1	Date 1	DSA

NVC WINE EDUCATION CENTER

2277 NAPA VALLEJO HWY
NAPA, CA 94558

NAPA VALLEY COLLEGE

DSA PROJECT NUMBER: 01-120890
PROJECT NUMBER: 22072
DATE: 4/12/2023
ENGINEER: JLT / NLG
PROJECT MANAGER: CEM

PHASE 2 ENLARGED ROOF FRAMING PLAN

S-206

THIS DOCUMENT AND THE IDEAS INCORPORATED HEREIN, AS AN INSTRUMENT OF PROFESSIONAL SERVICE, IS THE PROPERTY OF THE ENGINEER AND IS NOT TO BE USED, IN WHOLE OR IN PART FOR ANY OTHER PROJECT WITHOUT THE PRIOR WRITTEN AUTHORIZATION OF THE ENGINEER.

10/10/2023 11:52:29 AM C:\revit_local\22072_NVC_S232_jaaHRBLJH.rvt

FRAME ELEVATION NOTES:

1. ELEVATION VIEWS SHOWN IN THESE PLANS ARE FOR CONCEPTUAL USE ONLY. THE STRUCTURAL PLANS AND DETAILS TAKE PRECEDENCE OVER ELEVATION VIEWS.
2. SEE PLANS FOR ALL COLUMN AND BEAM SIZES.
3. SEE SHEET S-102 & S-103 FOR STUD FRAMING. SAD AND SMD FOR WALL OPENINGS.
4. SAD FOR FRAMING HEIGHTS, BEAM SLOPES AND ALL DIMENSIONS.
5. NO COLUMN SPLICES PERMITTED EXCEPT WHERE NOTED.

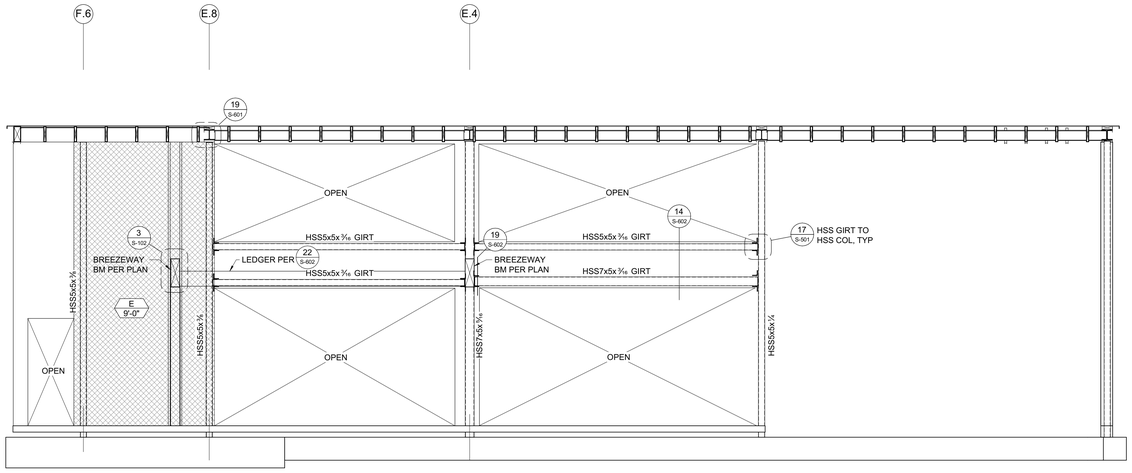

A ELEVATION - GRIDLINE 3
1/4" = 1'-0"

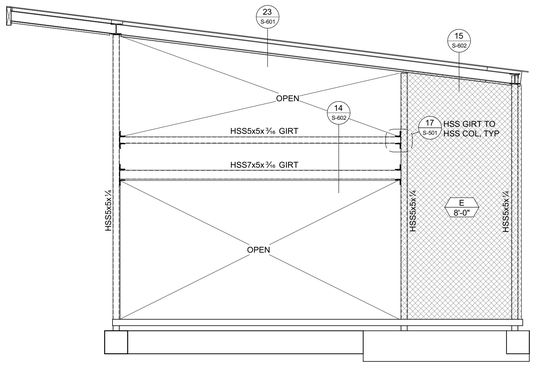

B ELEVATION - GRIDLINE D
1/4" = 1'-0"

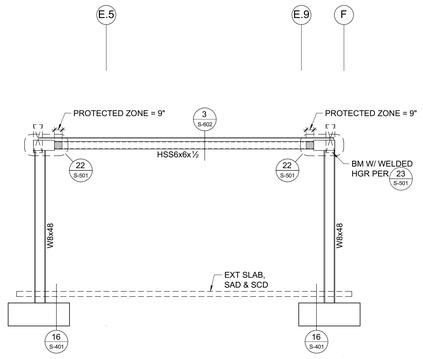

C MOMENT FRAME ELEVATION - GRIDLINE 3
1/4" = 1'-0"

IDENTIFICATION STAMP
DIV. OF THE STATE ARCHITECT
APP: 01-120890 INC:
REVIEWED FOR
SS ☑ FLS ☑ ACS ☑
DATE: 10/25/2023

TLCDARCHITECTURE
520 Third St. #250
Santa Rosa, CA 95401
o: 707.525.5600
f: 707.525.5616
tlcd.com

CONSULTANT:

ZFA STRUCTURAL ENGINEERS
1212 fourth street | suite z
santa rosa ca 95404
zfa job no. 22072
zfa.com
707.526.0992

copyright © 2023

STAMP:
CHRIS S. WARNER
REGISTERED PROFESSIONAL ENGINEER
No. S4872
STRUCTURAL
STATE OF CALIFORNIA
10/10/2023

REVISIONS:

Number	Date	Description
1	Date 1	DSA

NVC WINE EDUCATION CENTER

2277 NAPA VALLEJO HWY
NAPA, CA 94558

NAPA VALLEY COLLEGE

DSA PROJECT NUMBER: 01-120890
PROJECT NUMBER: 22072
DATE: 4/12/2023
ENGINEER: JLT / NLG
PROJECT MANAGER: CEM

ELEVATIONS

S-301

THIS DOCUMENT AND THE IDEAS INCORPORATED HEREIN, AS AN INSTRUMENT OF PROFESSIONAL SERVICE, IS THE PROPERTY OF THE ENGINEER AND IS NOT TO BE USED, IN WHOLE OR IN PART FOR ANY OTHER PROJECT WITHOUT THE PRIOR WRITTEN AUTHORIZATION OF THE ENGINEER.

10/10/2023 11:52:30 AM C:\revit_local\22072_NVC_S23C_jadd#6UJH.rvt

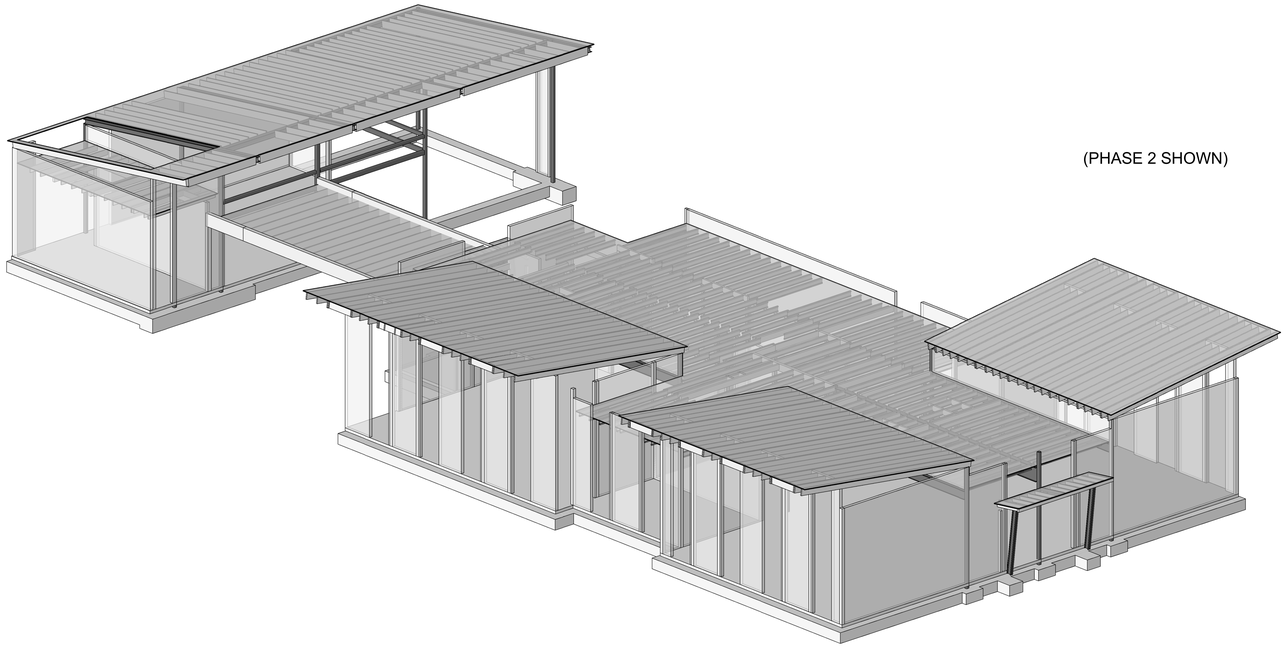

(PHASE 2 SHOWN)

1 NORTHEAST 3D VIEW

THREE-DIMENSIONAL VIEWS SHOWN IN THESE PLANS ARE FOR CONCEPTUAL USE ONLY. THE STRUCTURAL PLANS AND DETAILS TAKE PRECEDENCE OVER THREE-DIMENSIONAL VIEWS.

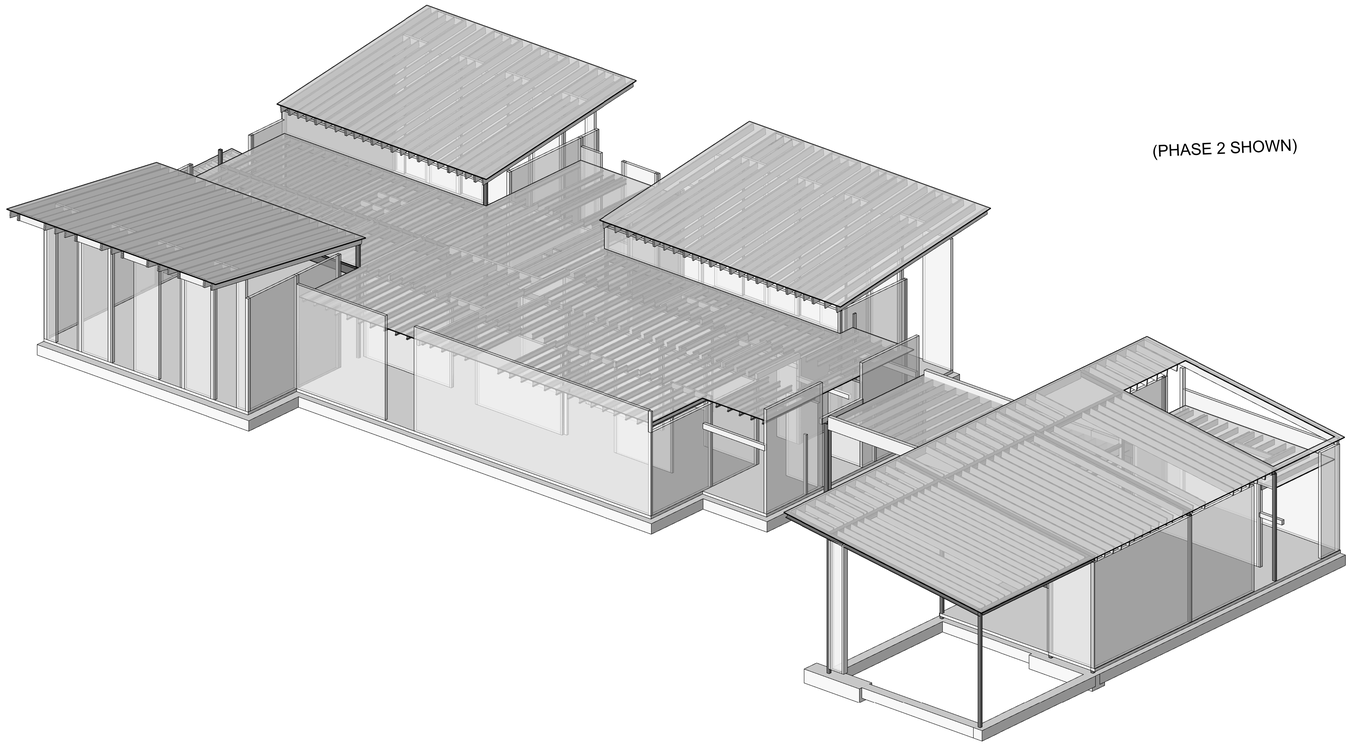

(PHASE 2 SHOWN)

2 SOUTHWEST 3D VIEW

IDENTIFICATION STAMP
DIV. OF THE STATE ARCHITECT
APP: 01-120890 INC:
REVIEWED FOR
SS ☑ FLS ☑ ACS ☑
DATE: 10/25/2023

TLCDARCHITECTURE
520 Third St. #250
Santa Rosa, CA 95401
o: 707.525.5600
f: 707.525.5616
tlcd.com

CONSULTANT:

ZFA STRUCTURAL ENGINEERS
1212 fourth street | suite z
santa rosa ca 95404
zfa job no. 22072
zfa.com
707.526.0992

copyright © 2023

STAMP:

REGISTERED PROFESSIONAL ENGINEER
CHRIS S. WARNER
No. S4012
STRUCTURAL
STATE OF CALIFORNIA
10/10/2023

REVISIONS:

Number	Date	Description

NVC WINE EDUCATION CENTER

2277 NAPA VALLEJO HWY
NAPA, CA 94558

NAPA VALLEY COLLEGE

DSA PROJECT NUMBER
01-120890

PROJECT NUMBER:
22072

DATE:
4/12/2023

ENGINEER:
JLT / NLG

PROJECT MANAGER:
CEM

SCHEMATIC 3D VIEW

S-302

THIS DOCUMENT AND THE IDEAS INCORPORATED HEREIN, AS AN INSTRUMENT OF PROFESSIONAL SERVICE, IS THE PROPERTY OF THE ENGINEER AND IS NOT TO BE USED, IN WHOLE OR IN PART FOR ANY OTHER PROJECT WITHOUT THE PRIOR WRITTEN AUTHORIZATION OF THE ENGINEER.

10/10/2023 11:52:32 AM C:\revit_local\22072_NVC_S23C_jackdH6UJH.rvt

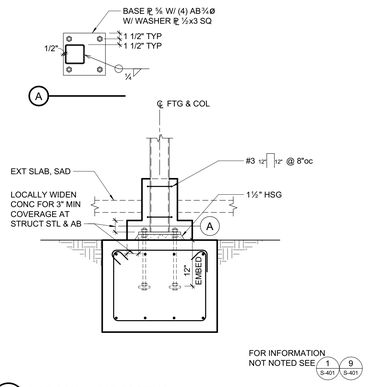

17 HSS COLUMN AT FOOTING
3/4" = 1'-0"

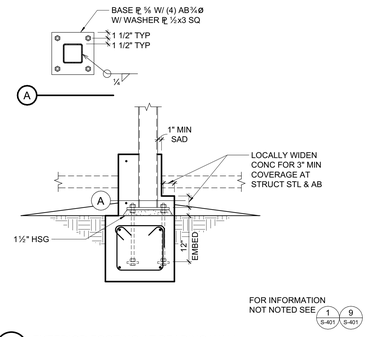

18 EXTERIOR FOOTING AT BEARING WALL
3/4" = 1'-0"

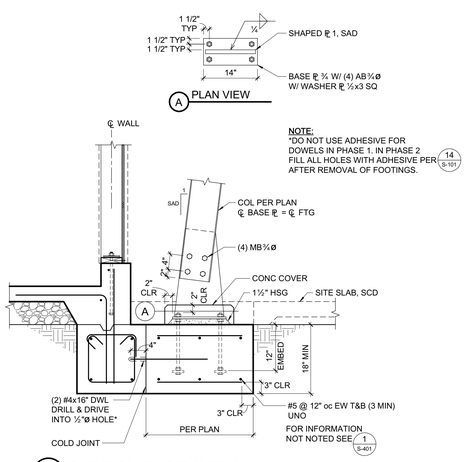

13 CANOPY COLUMN PAD FOOTING
3/4" = 1'-0"

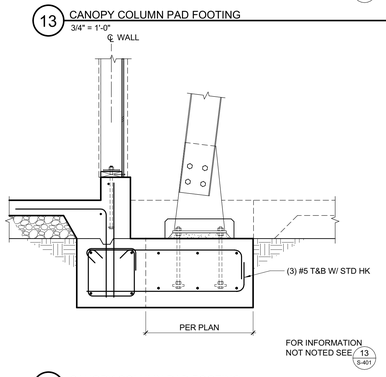

14 CANOPY COLUMN PAD FOOTING
3/4" = 1'-0"

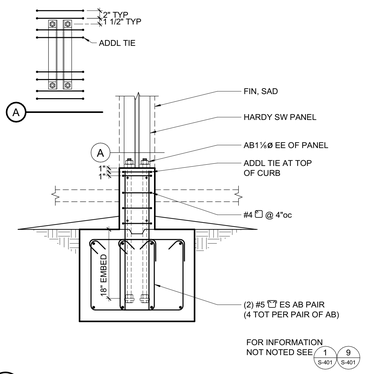

15 HARDY FRAME SHEAR WALL ANCHORAGE
3/4" = 1'-0"

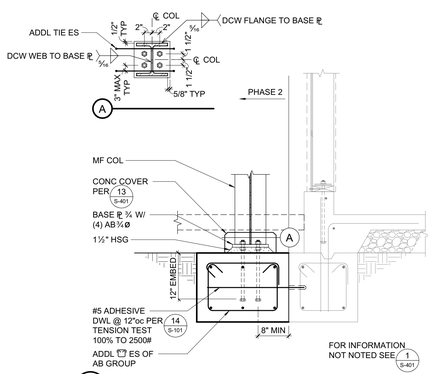

16 WF COLUMN BASE PLATE
3/4" = 1'-0"

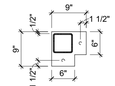

BASE PLATE AT CORNER

BASE PLATE AT EDGE

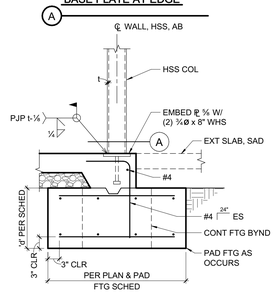

10 HSS COLUMN AT SLAB
3/4" = 1'-0"

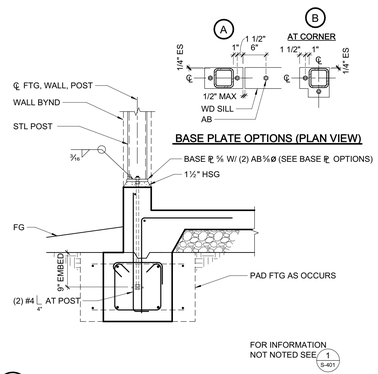

11 HSS COLUMN AT EXTERIOR FOOTING WITH CURB
3/4" = 1'-0"

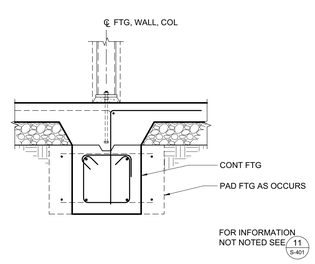

12 HSS COLUMN AT INTERIOR FOOTING
3/4" = 1'-0"

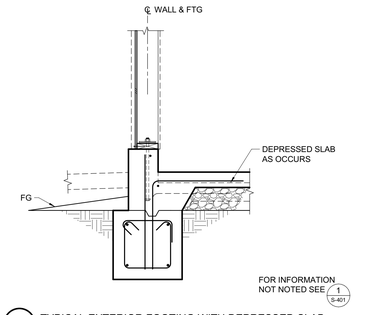

5 TYPICAL EXTERIOR FOOTING WITH DEPRESSED SLAB
3/4" = 1'-0"

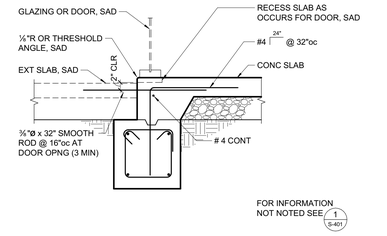

6 FOOTING AT GLAZING OR DOOR
3/4" = 1'-0"

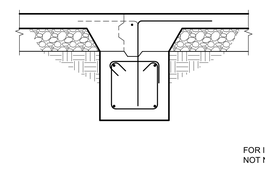

7 INTERIOR FOOTING WITHOUT WALL ABOVE
3/4" = 1'-0"

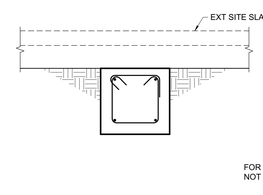

8 EXTERIOR FOOTING
3/4" = 1'-0"

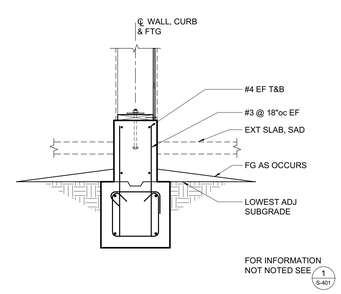

9 EXTERIOR FOOTING AT BEARING WALL
3/4" = 1'-0"

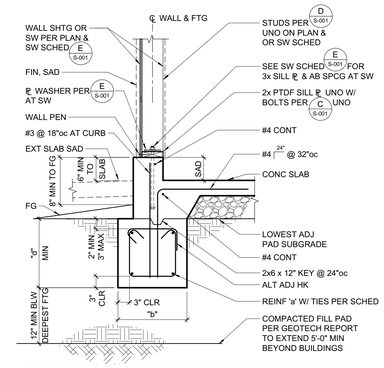

CONTINUOUS FOOTING SCHEDULE				
MARK	'b'	'd'	REINF 'a'	NOTES
CF18	18"	18"	(2) #5 T&B	PROVIDE #3 TIES @ 9"oc W/ ADDL REINF AT HD PER 8/S-102
CF24	24"	18"	(3) #5 T&B	PROVIDE #3 TIES @ 9"oc W/ ADDL REINF AT HD PER 8/S-102
CF30	30"	24"	(4) #5 T&B	PROVIDE #3 TIES @ 10"oc W/ ADDL REINF AT HD PER 8/S-102

1 TYPICAL EXTERIOR FOOTING
3/4" = 1'-0"

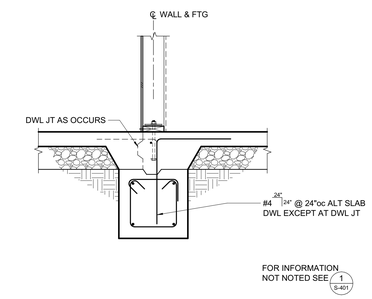

2 INTERIOR FOOTING AT SHEAR WALL
3/4" = 1'-0"

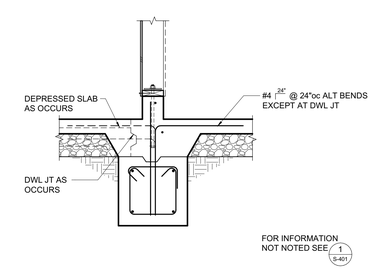

3 INTERIOR FOOTING AT CURB
3/4" = 1'-0"

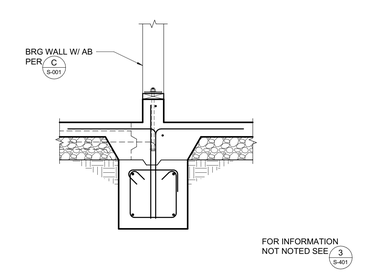

4 BEARING WALL AT CURB
3/4" = 1'-0"

IDENTIFICATION STAMP
DIV. OF THE STATE ARCHITECT
APP: 01-120890 INC:
REVIEWED FOR
SS ☑ FLS ☑ ACS ☑
DATE: 10/25/2023

TLCDARCHITECTURE
520 Third St. #250
Santa Rosa, CA 95401
o: 707.525.5600
f: 707.525.5616
tlcd.com

CONSULTANT:

ZFA STRUCTURAL ENGINEERS
1212 fourth street | suite z
santa rosa ca 95404
zfa job no. 22072
zfa.com
707.526.0992
copyright © 2023

STAMP
CHRIS S. WARNER
STRUCTURAL
STATE OF CALIFORNIA
10/10/2023

REVISIONS:

Number	Date	Description
1	Date 1	DSA

NVC WINE EDUCATION CENTER

2277 NAPA VALLEJO HWY
NAPA, CA 94558

NAPA VALLEY COLLEGE

DSA PROJECT NUMBER
01-120890
PROJECT NUMBER:
22072
DATE:
4/12/2023
ENGINEER:
JLT / NLG
PROJECT MANAGER:
CEM

FOUNDATION DETAILS

S-401

THIS DOCUMENT AND THE IDEAS INCORPORATED HEREIN, AS AN INSTRUMENT OF PROFESSIONAL SERVICE, IS THE PROPERTY OF THE ENGINEER AND IS NOT TO BE USED, IN WHOLE OR IN PART FOR ANY OTHER PROJECT WITHOUT THE PRIOR WRITTEN AUTHORIZATION OF THE ENGINEER.

10/10/2023 11:52:35 AM C:\revit_local\22072_NVC_S22C_jadsRBJ8.rvt

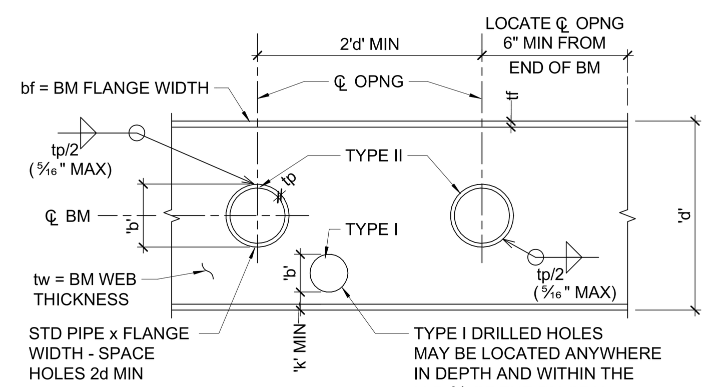

LIMITS OF OPENINGS:
TYPE I: b = 1/5d MAX
SPACED A MINIMUM OF 2d APART
TYPE II: b = 2/3d MAX
SPACED A MINIMUM 2d APART

NOTES:
1. PROVIDE HOLES IN BEAMS ONLY WHERE SPECIFICALLY SHOWN ON STRUCTURAL DRAWINGS.
2. DO NOT TORCH CUT OPENINGS ON SITE. TORCH CUT OPENINGS MADE IN SHOP TO BE GROUND SMOOTH. NO OVERCUTS OF ANY TYPE ALLOWED WITHOUT REPAIR.

21 OPENING IN STEEL BEAM
3/4" = 1'-0"

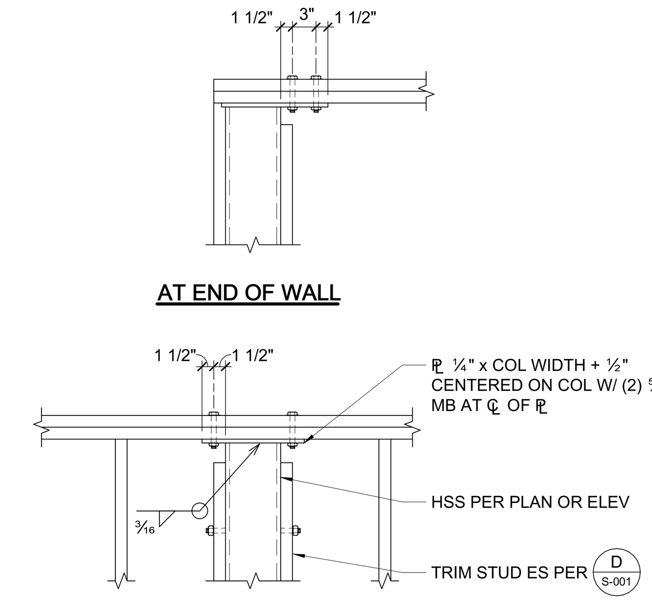

16 HSS COLUMN AT TOP PLATE
3/4" = 1'-0"

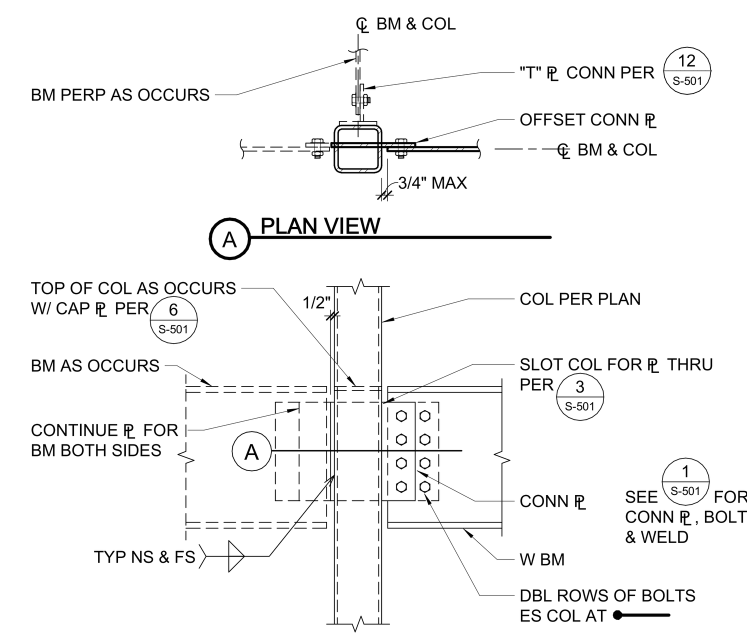

11 BEAM EACH SIDE TO HSS COLUMN
3/4" = 1'-0"

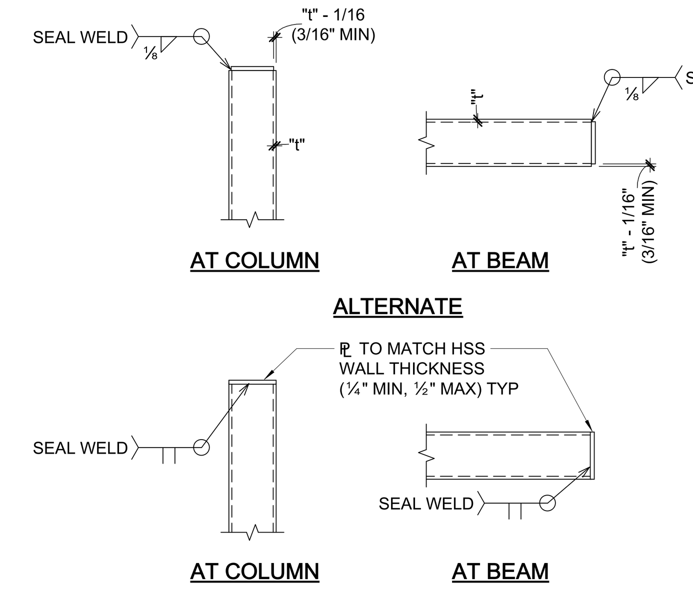

6 TYPICAL CAP PLATE
3/4" = 1'-0"

BEAM DEPTH	NO. BOLTS PER ROW	CONN. PLATE	WELD SIZE
W8, W10	2	℔ ⅜	5⁄16"
W12, W14	3	℔ ⅜	5⁄16"
W16	4	℔ ⅜	5⁄16"
W24	6	℔ ½	⅜"

NOTES:
1. R = 1¾" SEE TYP CONNECTION DETAILS. BOLT SPACING AND EDGE DISTANCE SHALL CONFORM TO AISC SPECIFICATIONS.
2. HIGH STRENGTH BOLTS (HSB) ARE GRADE A325-N UNO. PREPARE MATING SURFACES & TIGHTEN "SNUG TIGHT" AS DEFINED IN THE SPECIFICATIONS. AT LINES MARKED "SFRS" (SEISMIC FORCE RESISTING SYSTEM) HSB AND MATING SURFACES ARE SLIP CRITICAL CLASS A, UNO.
3. USE ASTM A36 CONNECTION PLATES, UNO.
4. A COMPLETE PENETRATION BEVEL WELD MAY BE SUBSTITUTED FOR THE FILLET WELDS SPECIFIED.
5. HOLE SIZE = BOLT SIZE + 1⁄16" (BOLT SIZE + ⅛" FOR 1"ø AND LARGER BOLTS). SHORT SLOTTED HOLES (+1⁄16" VERT, + ¼" HORIZ) MAY BE SUBSTITUTED (EXCEPT AS NOTED) ROUND HOLES ARE REQUIRED AT SFRS CONNECTIONS.

1 ⅞"ø HIGH STRENGTH BOLT (HSB) CONNECTION SCHEDULE
3/4" = 1'-0"

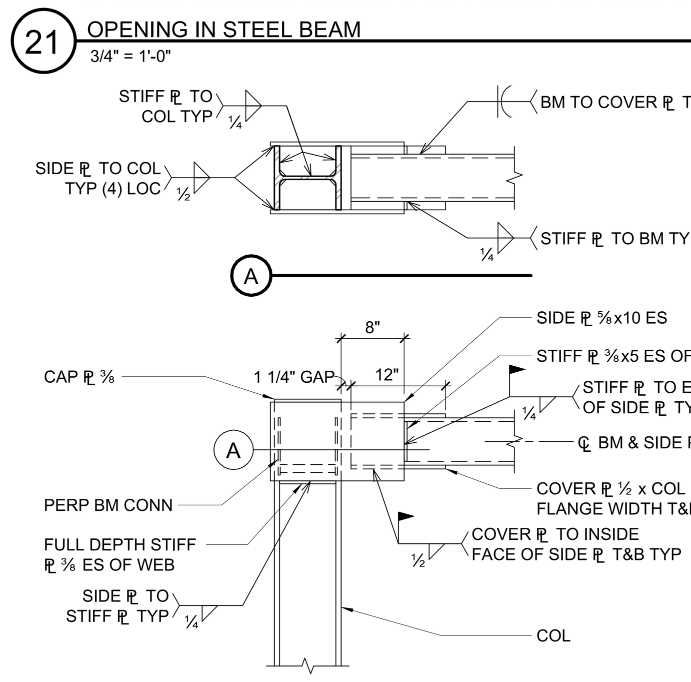

22 MOMENT FRAME BEAM TO COLUMN
3/4" = 1'-0"

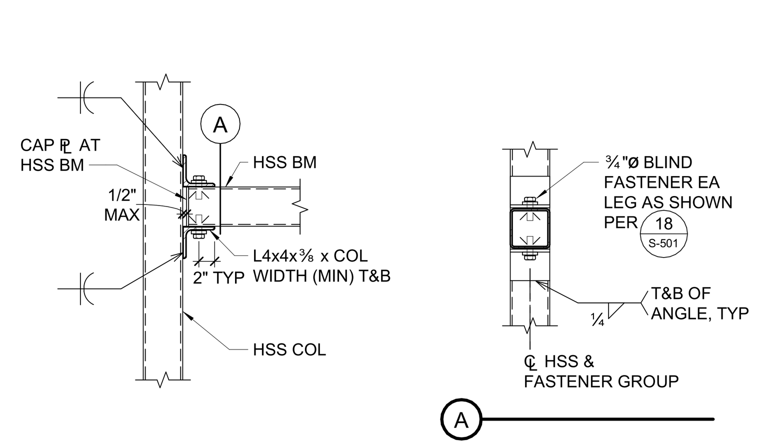

17 HSS BEAM TO HSS COLUMN
3/4" = 1'-0"

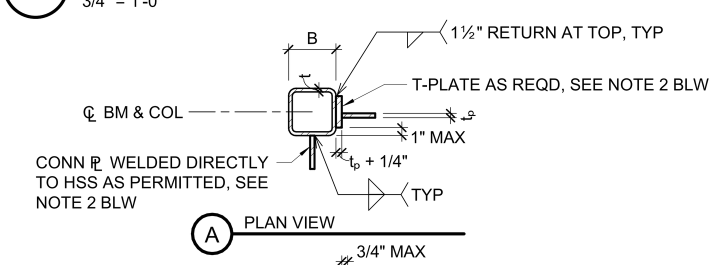

NOTES:
1. DETAIL IS NOT PERMITTED AS SFRS CONNECTIONS UNO.
2. IT IS PERMITTED TO OMIT T-PLATE AND WELD CONN ℔ DIRECTLY TO FACE OF HSS COL WHERE BOTH OF THE FOLLOWING ARE SATISFIED:
   a. B/t ≤ 40 AND (B-3t) / t ≤ 33.7
   b. t ≥ ⅝t_p (OR ⅞t_p FOR 50 KSI ℔)

FOR CONN ℔, BOLTS & WELD SEE 1/S-501

12 BEAM TO HSS COLUMN ('T' PLATE)
3/4" = 1'-0"

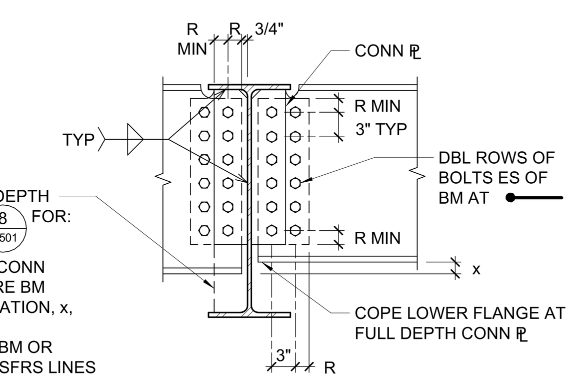

PROVIDE FULL DEPTH CONN ℔ PER 8/S-501 FOR:
* ONE SIDED CONN
* CONN WHERE BM DEPTH VARIATION, x, EXCEEDS 6"
* CONN INTO BM OR GIRDER ON SFRS LINES

SEE 1/S-501 FOR CONN ℔, BOLTS, & WELD

7 TYPICAL BEAM TO BEAM CONNECTION
3/4" = 1'-0"

2 NOT USED
3/4" = 1'-0"

HDG STRUCTURAL STEEL BLIND FASTENER								
FASTENER TYPE	NOMINAL FASTENER DIAMETER (IN)	HOLE SIZE (IN)	INSTALL / TEST TORQUE (FT-LB)	MIN, MAX CLAMPING THICKNESS (IN) SPCG	MIN FIXTURE THICKNESS (IN)	MIN SPACING (IN)	MIN EDGE DISTANCE (IN)	MIN HSS EDGE DISTANCE (IN)
LINDAPTER HOLLO-BOLT MODEL LHBMxx#xHDG (ICC ESR-3330)*	5⁄16	9⁄16	17	⅛, 2⅜	N/A	1⅜	½	11⁄16
	⅜	¾	33	⅛, 2⅜	N/A	19⁄16	9⁄16	⅞
	½	13⁄16	59	⅛, 2¾	N/A	2	11⁄16	1
	⅝	11⁄16	140	½, 213⁄16	5⁄16	23⁄16	13⁄16	15⁄16
	¾	45⁄16	221	½, 3⅜	5⁄16	2¾	1	15⁄16
LNA SOLUTIONS BOXBOLT TYPE C MODEL xxxFALxxC (ICC ESR-3217)*	½	13⁄16	60	½, 211⁄16	N/A	21⁄16	1⅛	N/A
	⅝	11⁄16	140	⅝, 31⁄16	N/A	211⁄16	1⅜	N/A
	¾	15⁄16	220	¾, 4	N/A	37⁄16	1¾	N/A

*FASTENERS SHALL NOT BE USED IN SLIP CRITICAL (SC) APPLICATIONS.

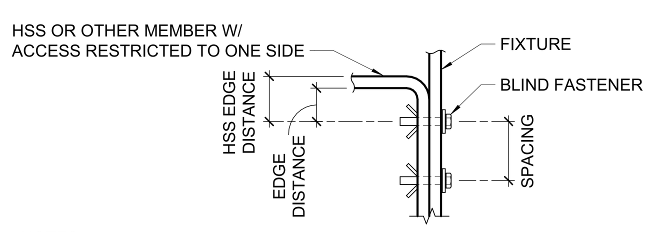

NOTES:
1. INSTALL BLIND FASTENERS PER MANUFACTURER'S INFORMATION AND ICC REPORT INSTRUCTIONS. SPECIAL INSPECTION IS REQUIRED PER SECTION 1705A OF THE CBC AND THE REQUIREMENTS OF THE ICC REPORTS.
2. CONTRACTOR TO VERIFY MINIMUM EDGE DISTANCES, SPACING AND THICKNESS ARE IN ACCORDANCE W/ SCHEDULE PRIOR TO INSTALLING FASTENER.
3. SELECT APPROPRIATE FASTENER LENGTH FOR TOTAL THICKNESS OF PLIES BEING FASTENED. THERE SHALL BE NO GAP BETWEEN FASTENED PLIES. THERE SHALL BE NO GAP BETWEEN FASTENER COLLAR AND THE FIXTURE. INSTALL FASTENER WITH OPEN END WRENCH AND TORQUE WRENCH, THEN REMOVE OPEN END WRENCH TO VERIFY INSTALLATION TORQUE ACHIEVED.
4. THE SPECIAL INSPECTOR SHALL PERFORM PERIODIC/CONTINUOUS INSPECTION IN ACCORDANCE WITH AISC 360, SIMILAR TO HIGH STRENGTH BOLTS.
5. THESE FASTENERS ARE ONLY FOR USE WHERE SPECIFICALLY NOTED ON THE DRAWINGS.

18 BLIND FASTENER TO STEEL
3/4" = 1'-0"

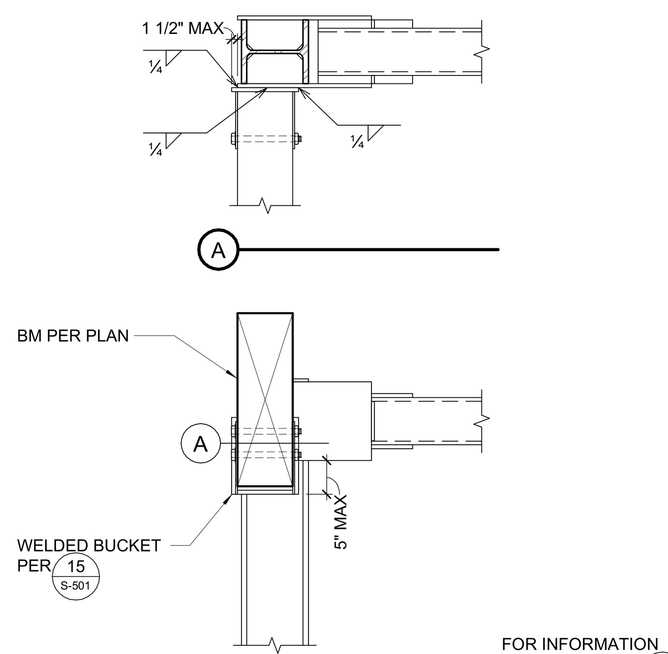

FOR INFORMATION NOT NOTED SEE 22/S-501

23 BEAM TO MOMENT FRAME COLUMN
3/4" = 1'-0"

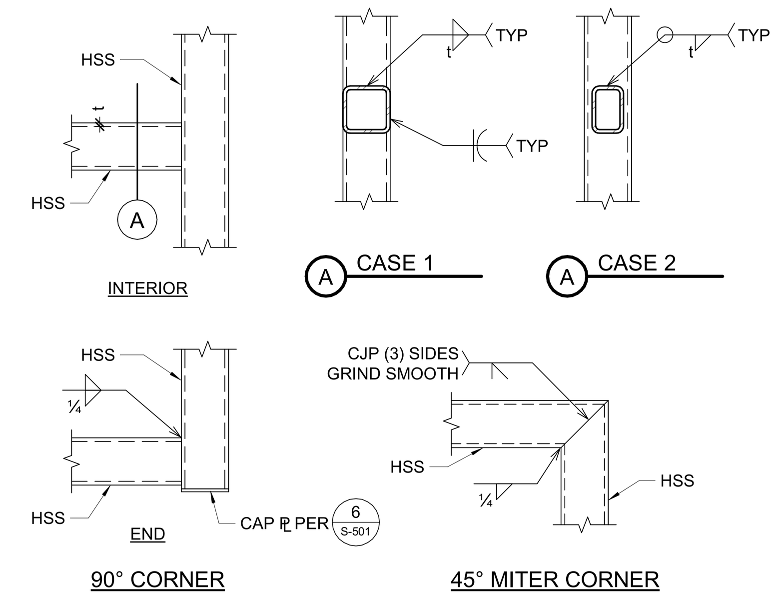

13 TYPICAL HSS TO HSS CONNECTION
3/4" = 1'-0"

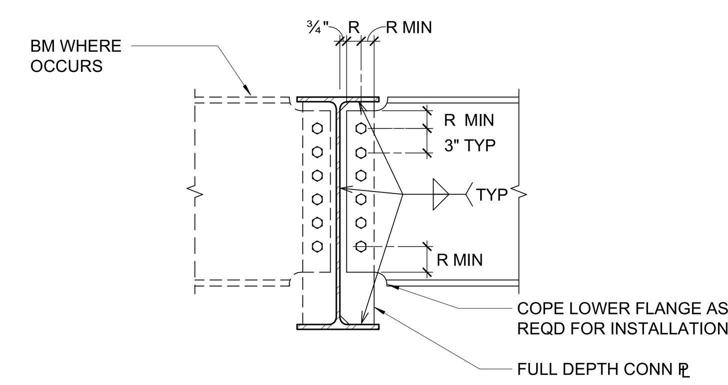

SEE 1/S-501 FOR CONN ℔, BOLTS, & WELD

8 TYPICAL FULL DEPTH BEAM TO BEAM CONNECTION
3/4" = 1'-0"

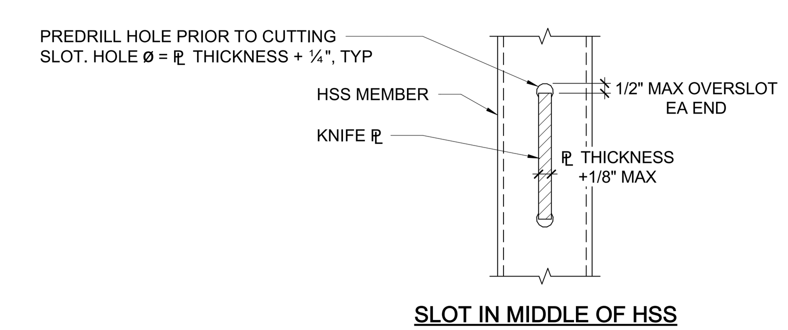

3 TYPICAL SLOTTED HSS FOR GUSSET CONNECTION
1 1/2" = 1'-0"

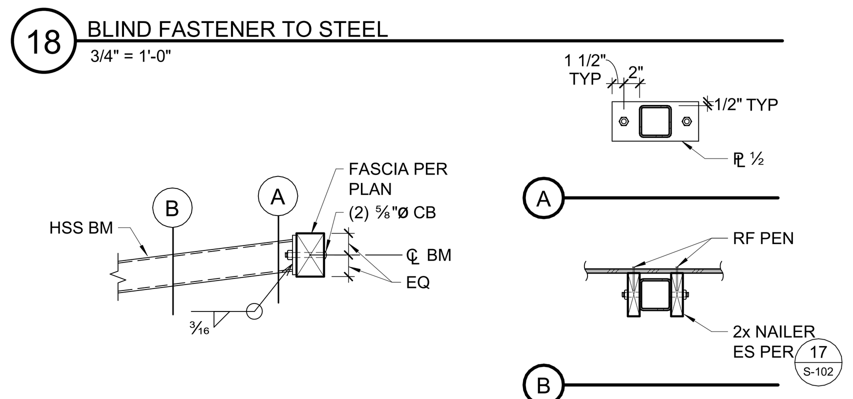

19 HSS BEAM TO WOOD FASCIA
3/4" = 1'-0"

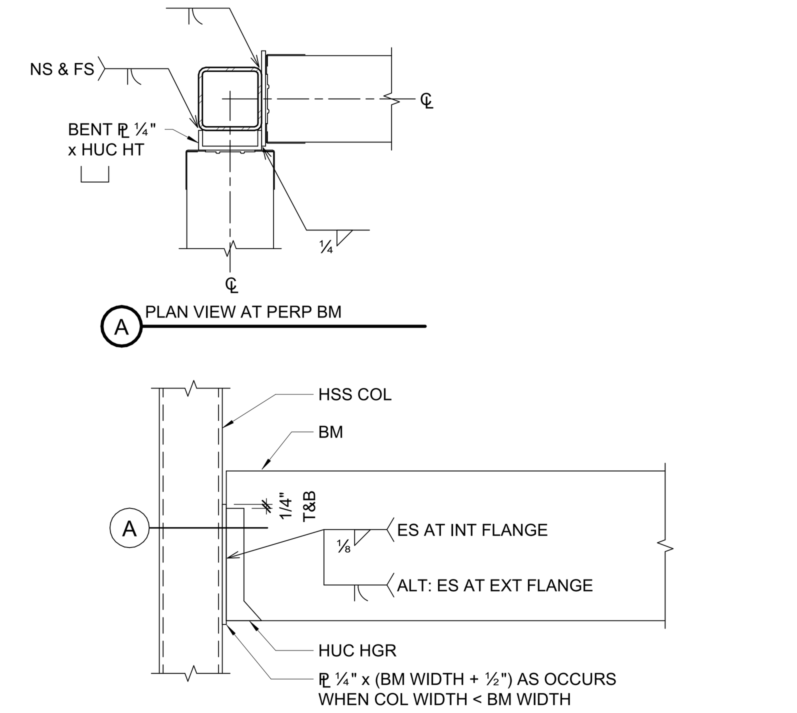

14 TYPICAL WELDED BEAM HANGER
1 1/2" = 1'-0"

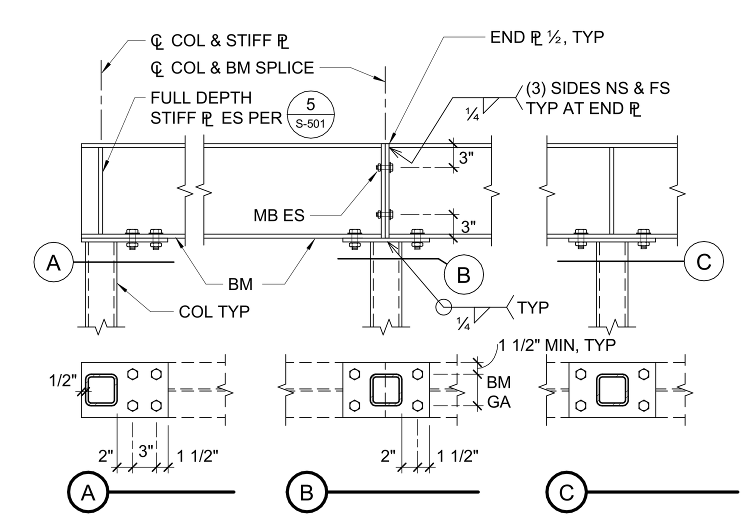

NOTES:
1. ALL COLUMN CAP PLATES SHALL BE THE SAME WIDTH AS BEAM FLANGE (OR COLUMN DIMENSION +½", WHICHEVER IS GREATER), THICKNESS SAME AS BEAM FLANGE, ½" MINIMUM.
2. ALL FASTENERS TO BE MB¾ø.
3. CASE B IS NOT PERMITTED AT OVERHANG CONDITION.

9 COLUMN ABOVE AND BELOW
3/4" = 1'-0"

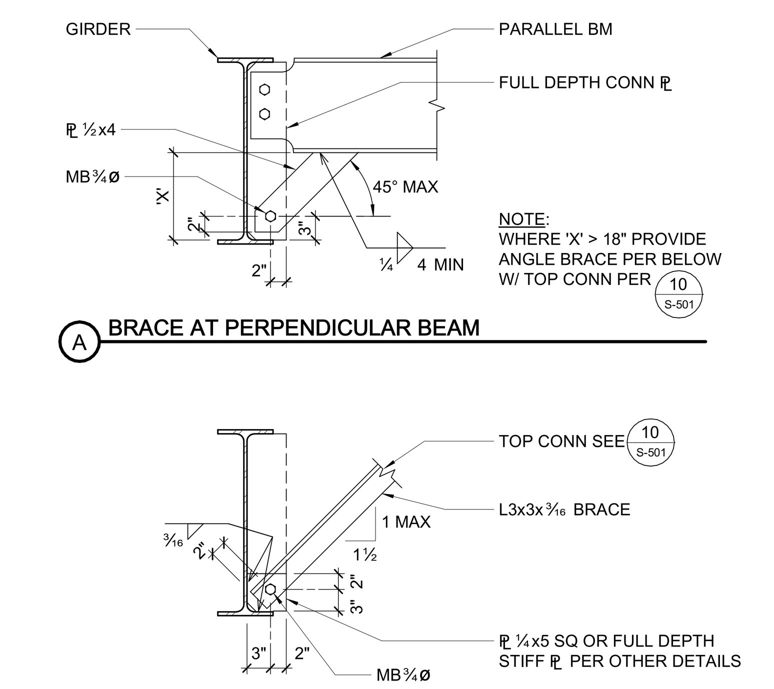

NOTE:
WHERE 'X' > 18" PROVIDE ANGLE BRACE PER BELOW W/ TOP CONN PER 10/S-501

4 TYPICAL BEAM BOTTOM FLANGE BRACE
3/4" = 1'-0"

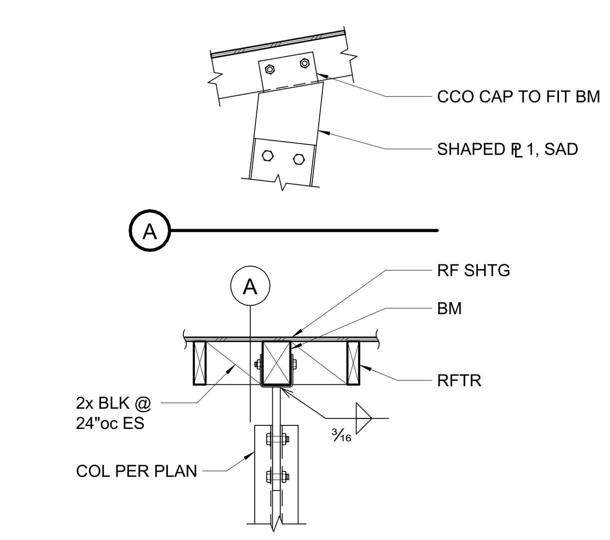

20 WOOD BEAM TO STEEL COLUMN
3/4" = 1'-0"

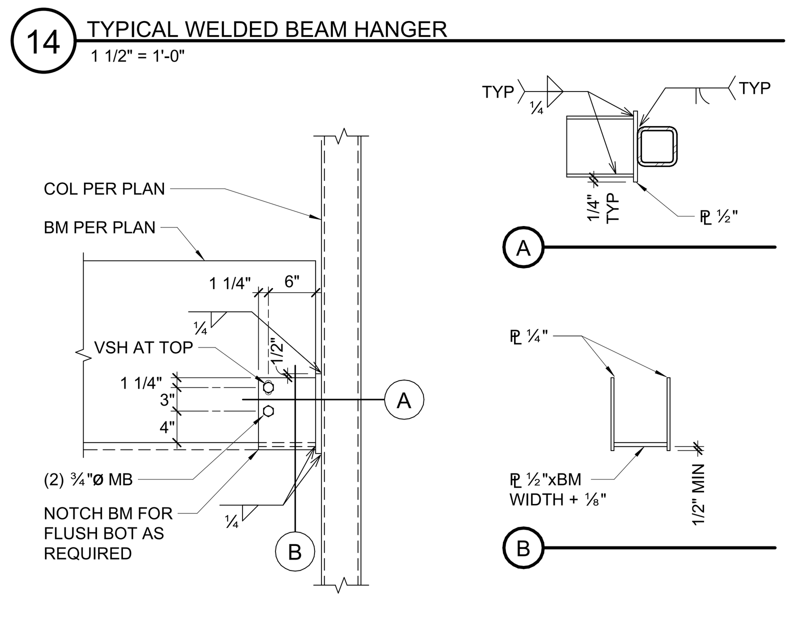

15 BEAM CONNECTION AT HSS COLUMN
3/4" = 1'-0"

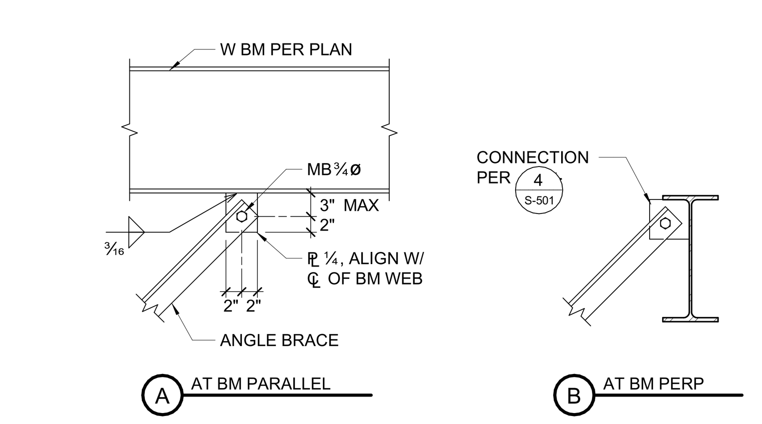

10 TOP OF BRACE
3/4" = 1'-0"

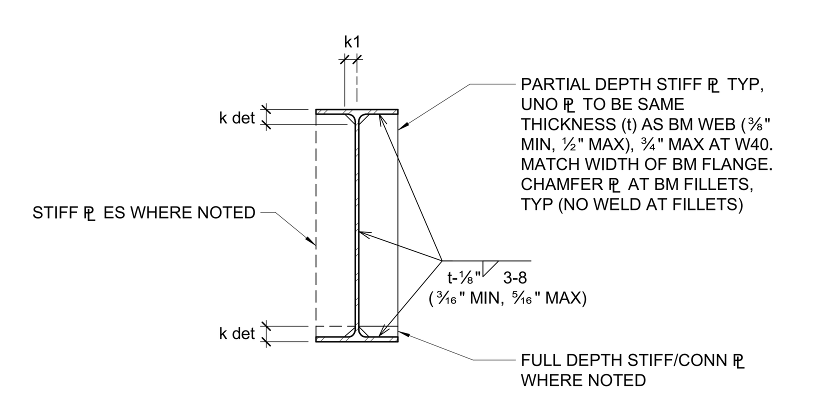

5 TYPICAL BEAM WEB STIFFENER PLATE DETAIL
3/4" = 1'-0"

IDENTIFICATION STAMP
DIV. OF THE STATE ARCHITECT
APP: 01-120890 INC:
REVIEWED FOR
SS ☑ FLS ☑ ACS ☑
DATE: 10/25/2023

TLCDARCHITECTURE
520 Third St. #250
Santa Rosa, CA 95401
o: 707.525.5600
f: 707.525.5616
tlcd.com

CONSULTANT:

ZFA STRUCTURAL ENGINEERS
1212 fourth street | suite z
santa rosa ca 95404
zfa job no. 22072
zfa.com
707.526.0992
copyright © 2023

STAMP:
10/10/2023

REVISIONS:

Number	Date	Description
1	Date 1	DSA

NVC WINE EDUCATION CENTER

2277 NAPA VALLEJO HWY
NAPA, CA 94558

NAPA VALLEY COLLEGE

DSA PROJECT NUMBER
01-120890
PROJECT NUMBER:
22072
DATE:
4/12/2023
ENGINEER:
JLT / NLG
PROJECT MANAGER:
CEM

THIS DOCUMENT AND THE IDEAS INCORPORATED HEREIN, AS AN INSTRUMENT OF PROFESSIONAL SERVICE, IS THE PROPERTY OF THE ENGINEER AND IS NOT TO BE USED, IN WHOLE OR IN PART FOR ANY OTHER PROJECT WITHOUT THE PRIOR WRITTEN AUTHORIZATION OF THE ENGINEER.

STEEL DETAILS

S-501

10/10/2023 11:52:40 AM C:\revit_local\22072_NVC_S23C_jacktH6UJH.rvt

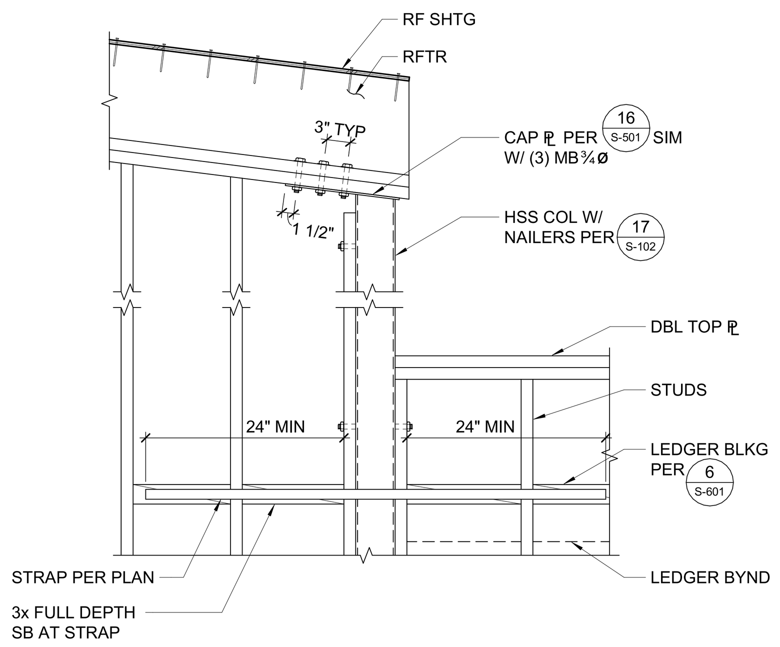

21 TIE AT HSS COLUMN
3/4" = 1'-0"

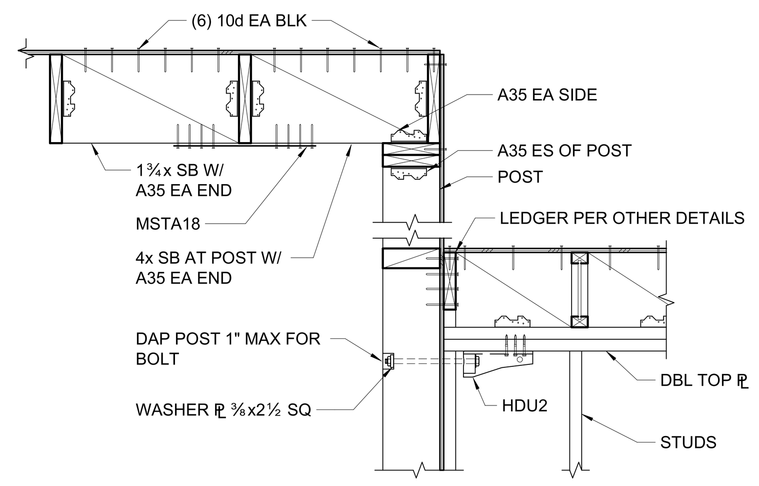

16 HOLDOWN TIE
3/4" = 1'-0"

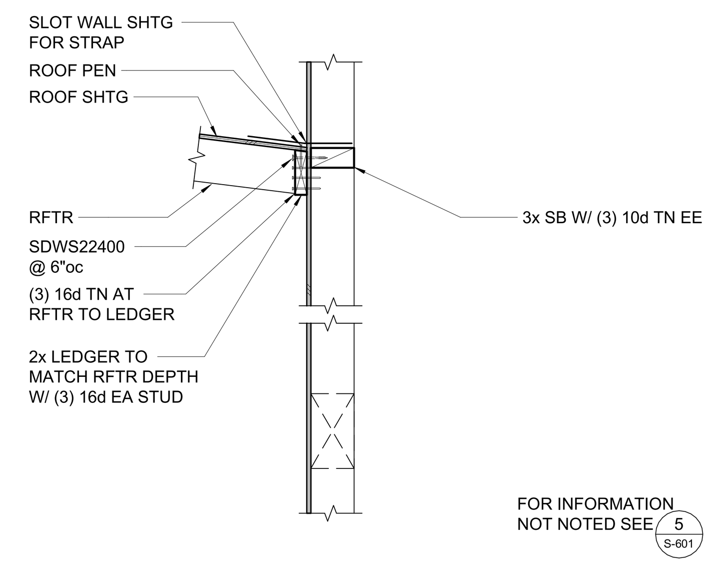

11 LEDGER AT EXTERIOR WALL
3/4" = 1'-0"

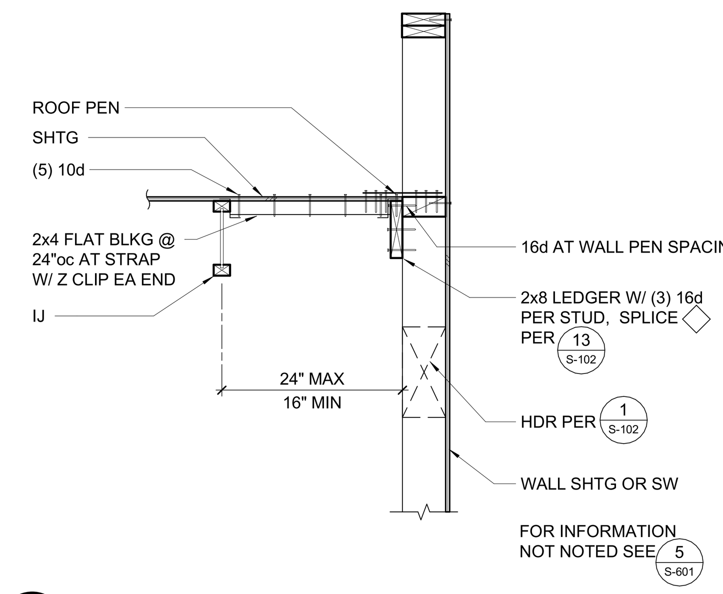

6 LEDGER AT EXTERIOR WALL - IJ PARAPET
3/4" = 1'-0"

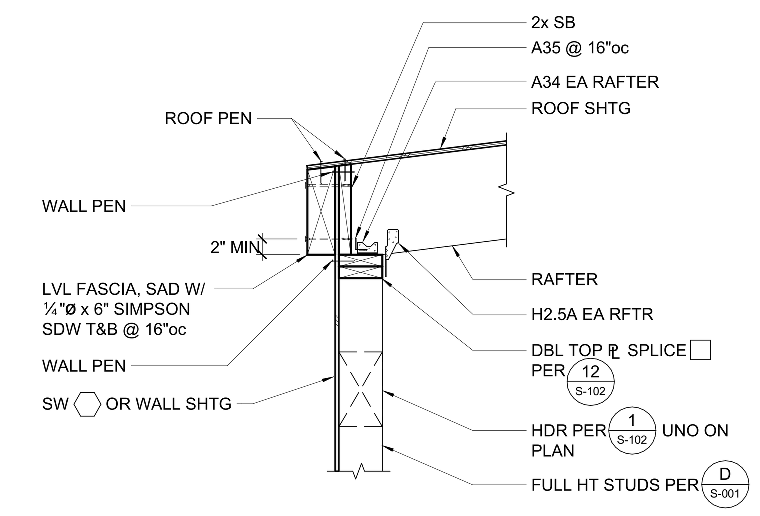

1 EXTERIOR WALL AT PERPENDICULAR FRAMING
3/4" = 1'-0"

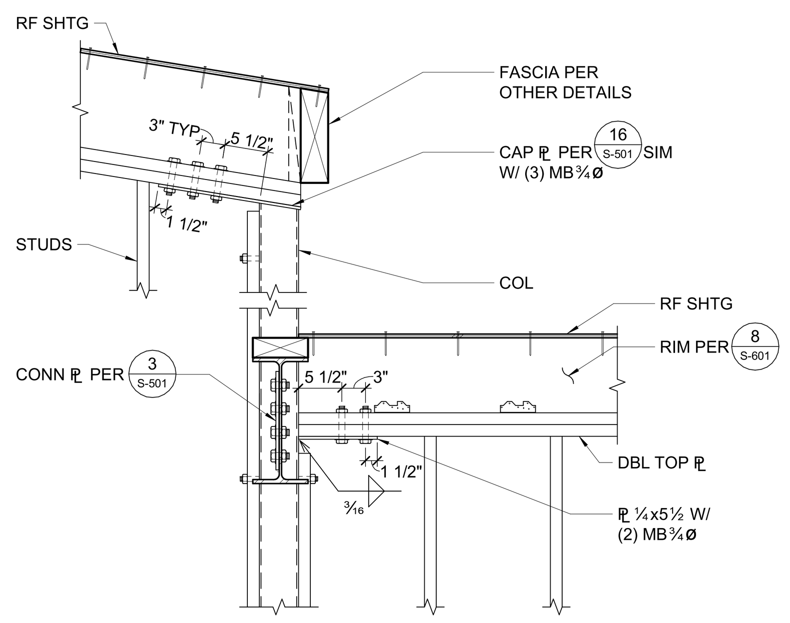

22 TIE AT HSS COLUMN
3/4" = 1'-0"

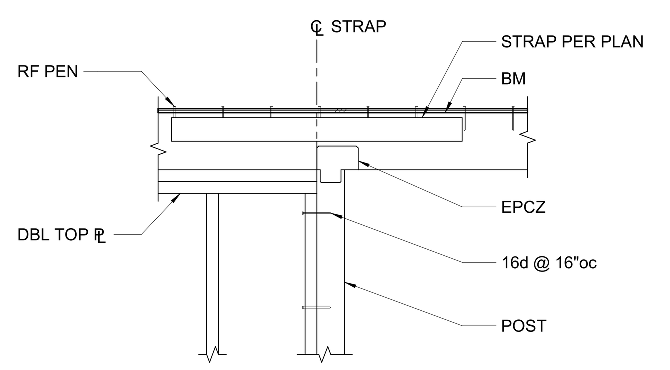

17 STRAP TOP PLATE TO BEAM
3/4" = 1'-0"

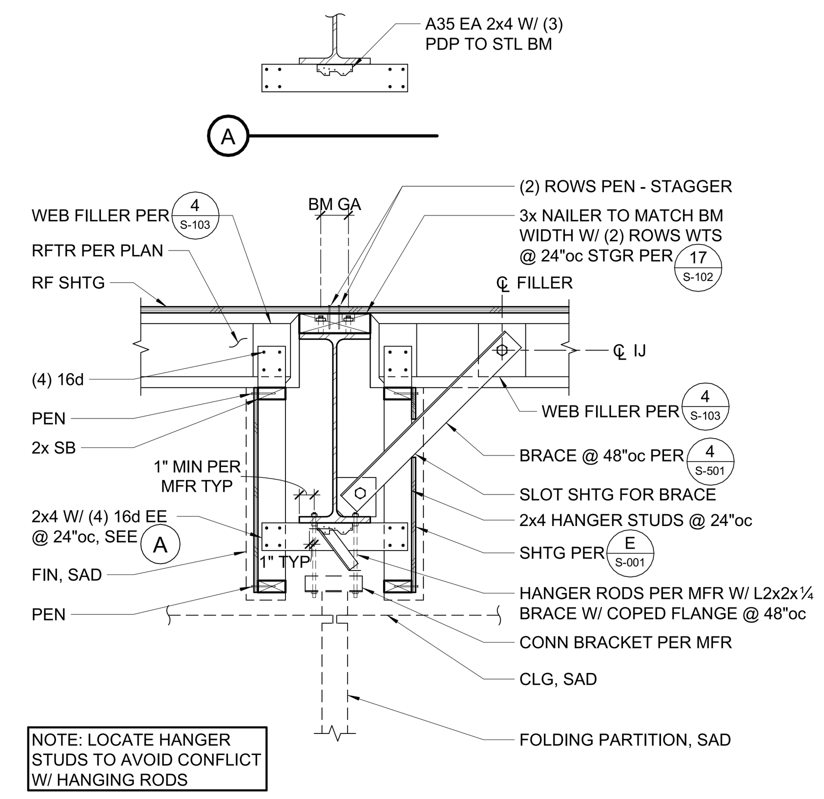

12 FRAMING AT W BEAM - IJ
3/4" = 1'-0"

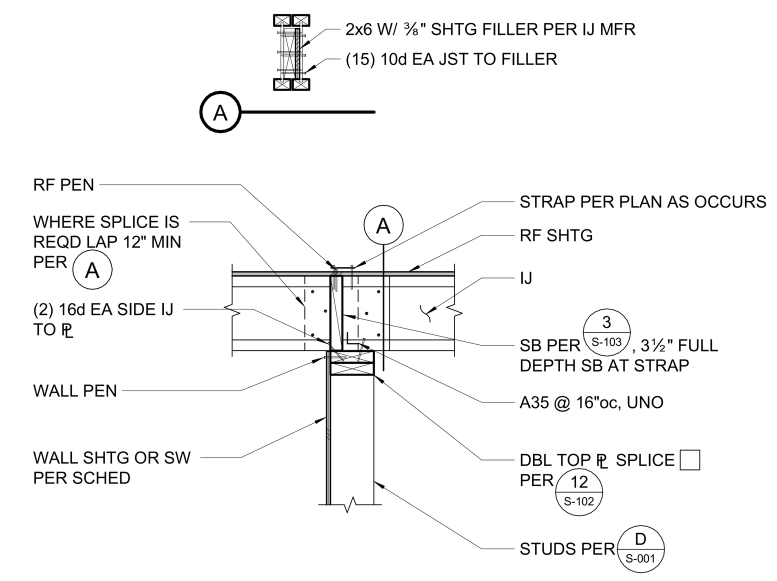

7 INTERIOR SHEAR WALL
3/4" = 1'-0"

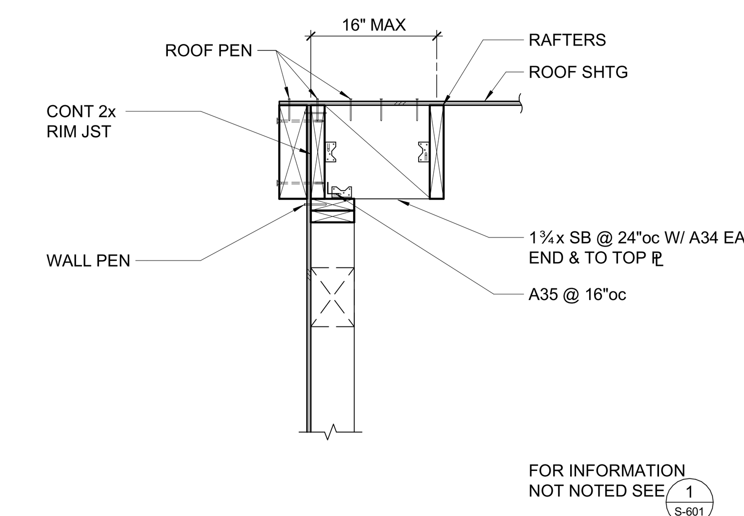

2 PARALLEL FRAMING AT EXTERIOR WALL
3/4" = 1'-0"

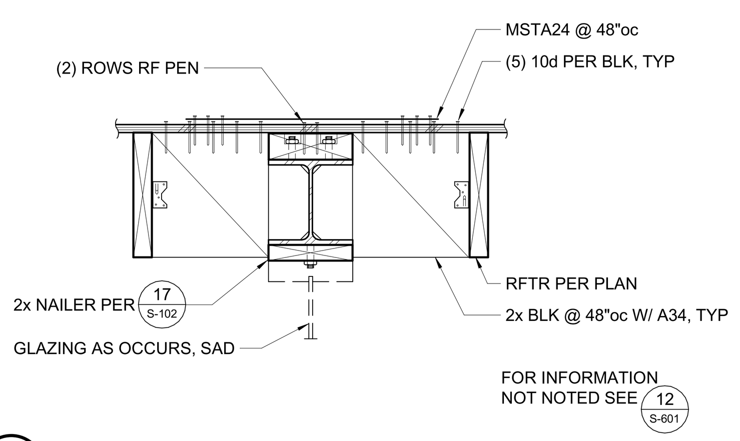

23 PARALLEL FRAMING AT W BEAM
1" = 1'-0"

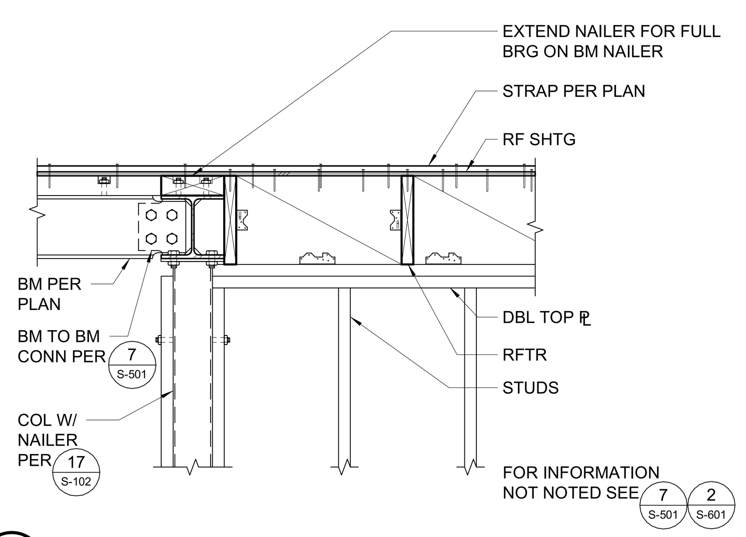

18 TOP PLATE TIE AT HSS COLUMN
3/4" = 1'-0"

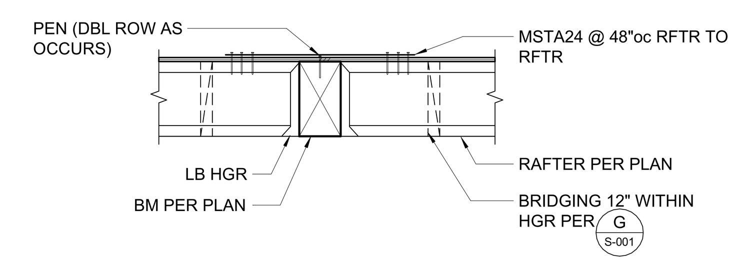

13 FRAMING AT FLUSH BEAM
3/4" = 1'-0"

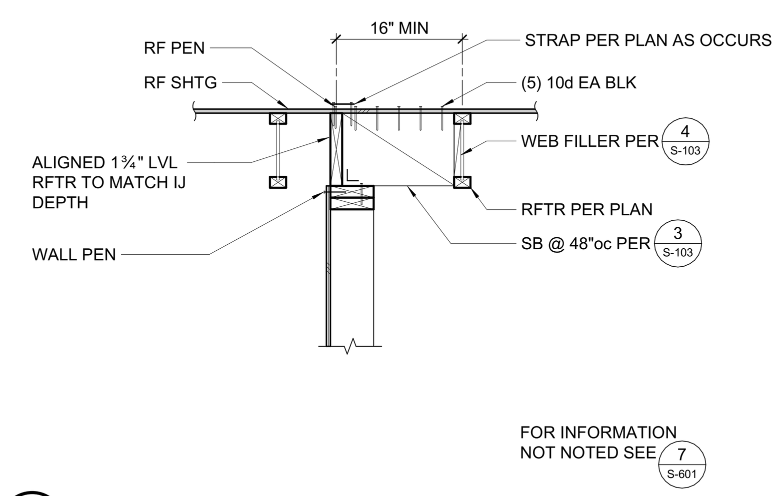

8 INTERIOR SHEAR WALL
3/4" = 1'-0"

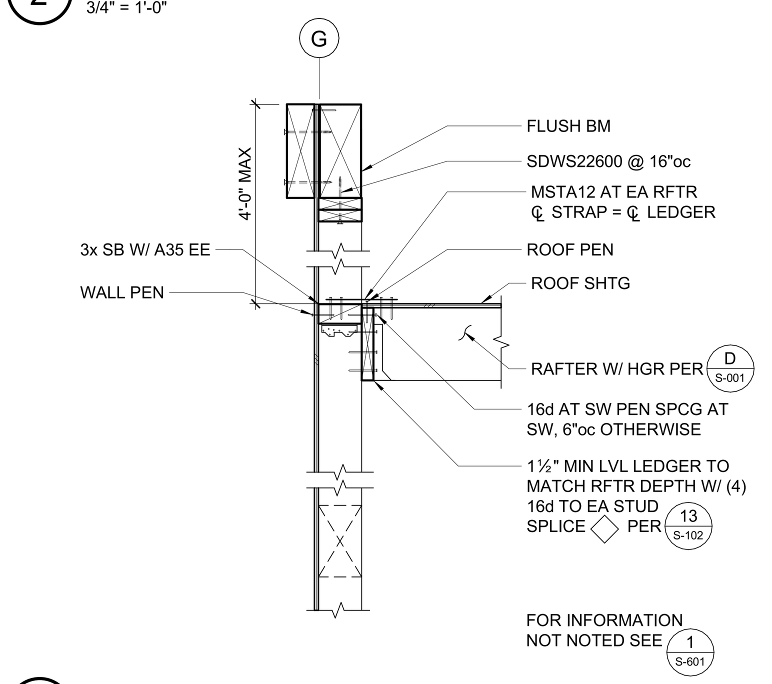

3 WALL ANCHORAGE AT EXTERIOR WALL - RAFTERS PARAPET
3/4" = 1'-0"

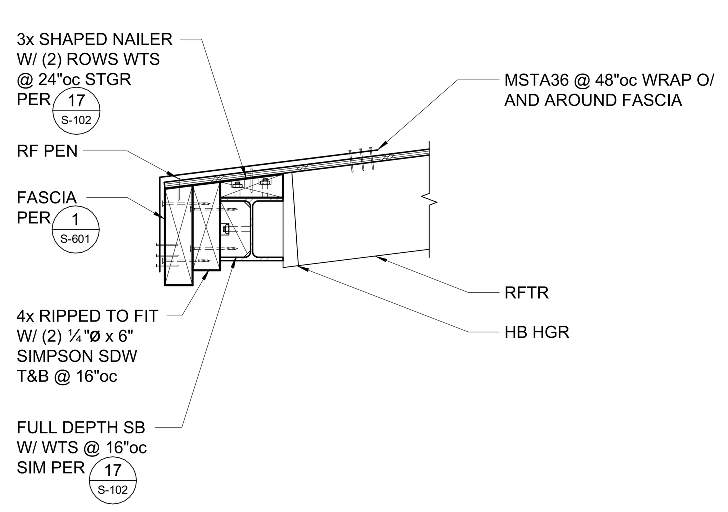

24 ROOF RAFTERS AT W BEAM
3/4" = 1'-0"

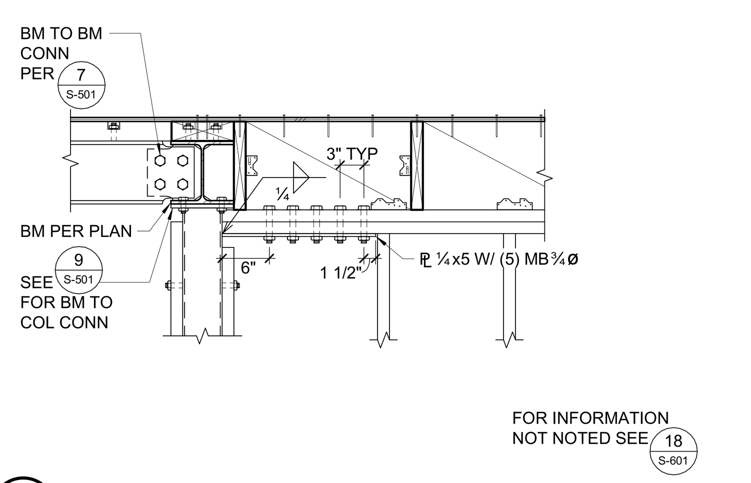

19 TOP PLATE TIE AT HSS COLUMN
3/4" = 1'-0"

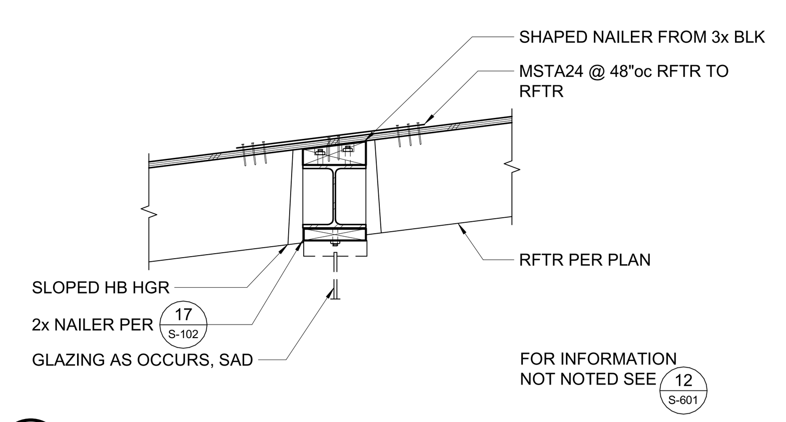

14 ROOF RAFTERS AT W BEAM
3/4" = 1'-0"

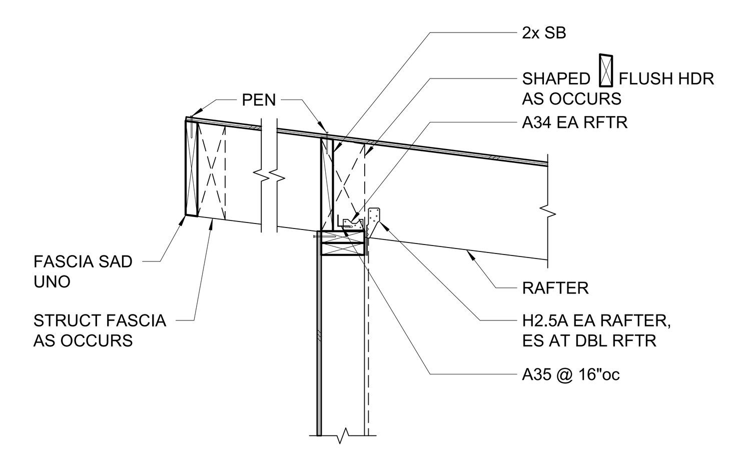

9 CANTILEVERED FRAMING
3/4" = 1'-0"

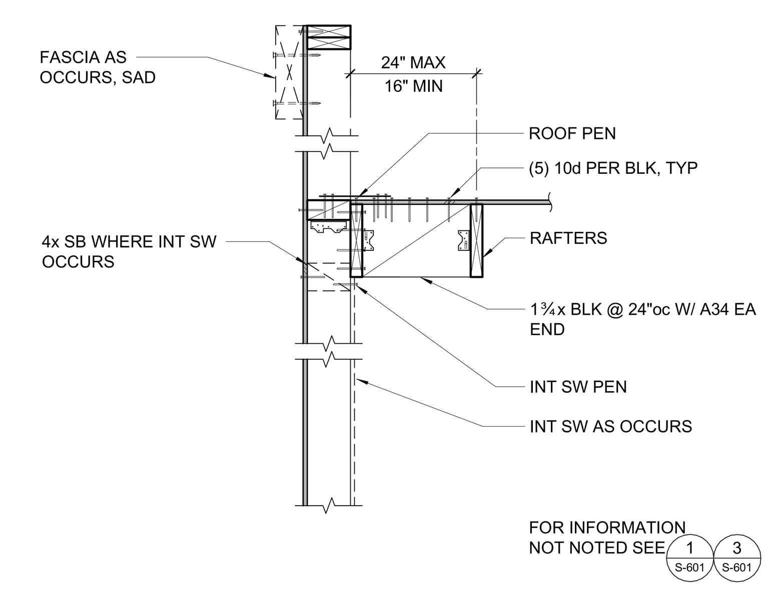

4 PARALLEL FRAMING AT EXTERIOR WALL - RAFTERS PARAPET
3/4" = 1'-0"

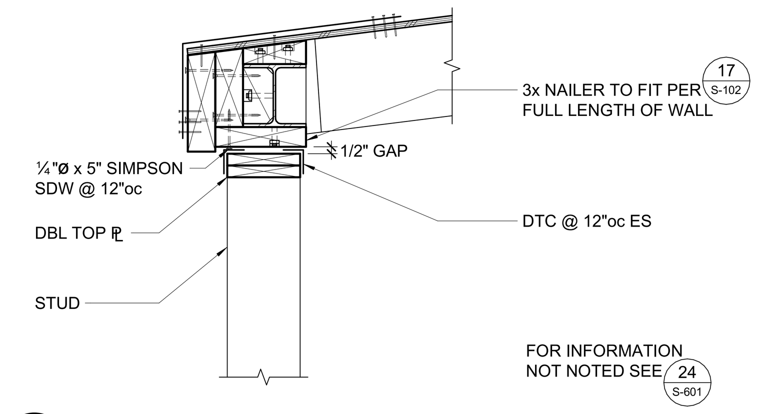

25 NON-BEARING WALL AT W BEAM
3/4" = 1'-0"

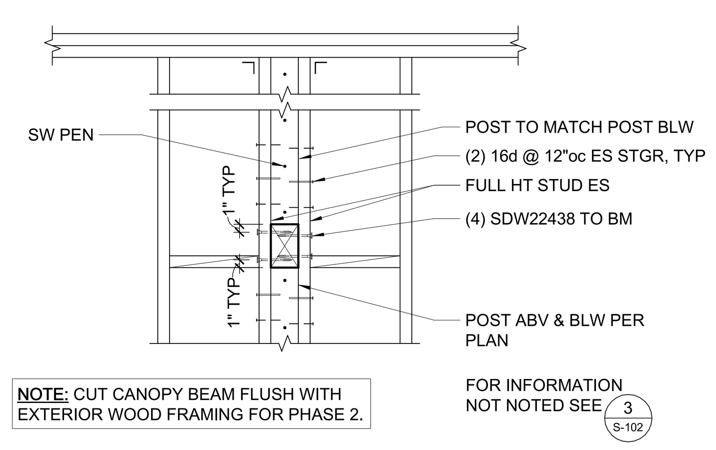

20 CANOPY BEAM IN WALL
3/4" = 1'-0"

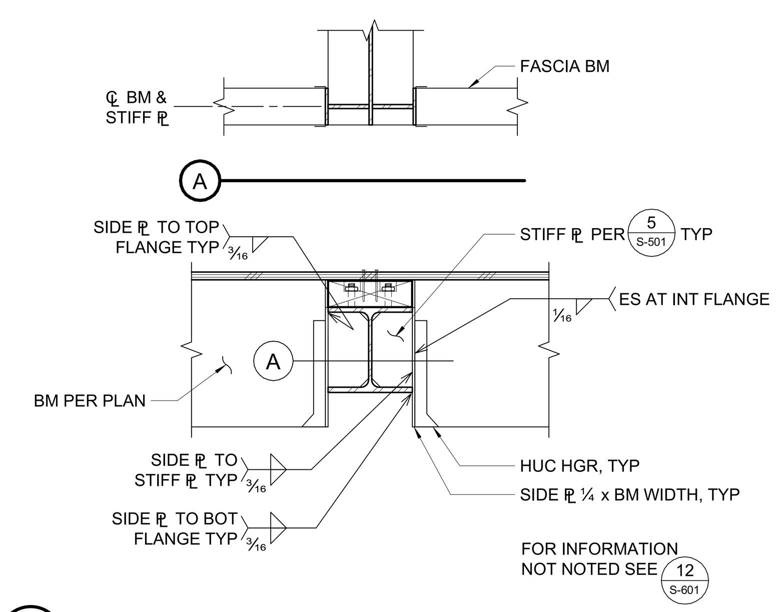

15 FRAMING AT W BEAM
1" = 1'-0"

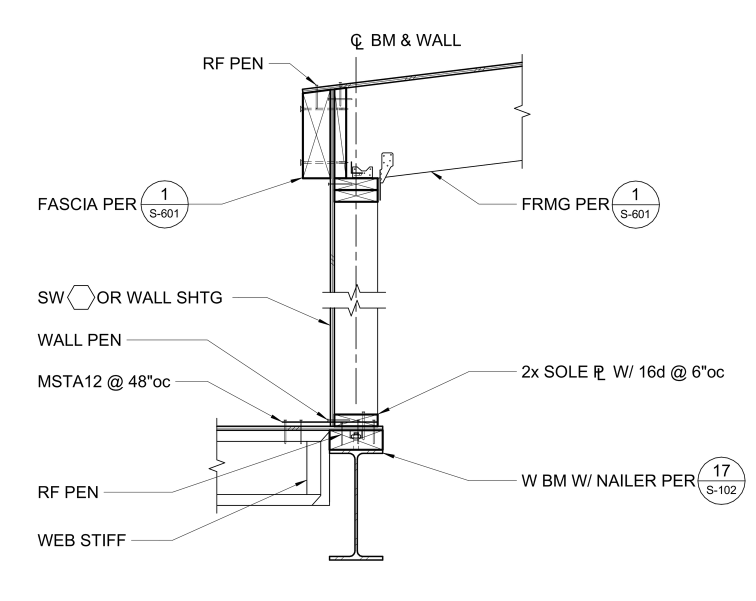

10 STUD WALL ABOVE STEEL BEAM
3/4" = 1'-0"

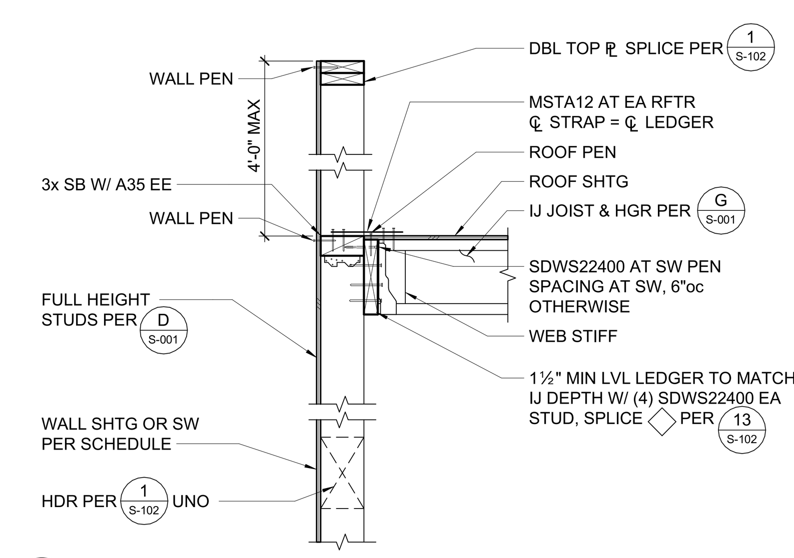

5 WALL ANCHORAGE AT EXTERIOR WALL - IJ PARAPET
3/4" = 1'-0"

IDENTIFICATION STAMP
DIV. OF THE STATE ARCHITECT
APP: 01-120890 INC:
REVIEWED FOR
SS ☑ FLS ☑ ACS ☑
DATE: 10/25/2023

TLCDARCHITECTURE
520 Third St. #250
Santa Rosa, CA 95401
o: 707.525.5600
f: 707.525.5616
tlcd.com

CONSULTANT:

ZFA STRUCTURAL ENGINEERS
1212 fourth street | suite z
santa rosa ca 95404
zfa job no. 22072
zfa.com
707.526.0992
copyright © 2023

STAMP:
CHRIS S. WARNER No. S4613 STRUCTURAL STATE OF CALIFORNIA REGISTERED PROFESSIONAL ENGINEER
10/10/2023

REVISIONS:

Number	Date	Description
1	Date 1	DSA

NVC WINE EDUCATION CENTER

2277 NAPA VALLEJO HWY
NAPA, CA 94558

NAPA VALLEY COLLEGE

DSA PROJECT NUMBER
01-120890
PROJECT NUMBER:
22072
DATE:
4/12/2023
ENGINEER:
JLT / NLG
PROJECT MANAGER:
CEM

THIS DOCUMENT AND THE IDEAS INCORPORATED HEREIN, AS AN INSTRUMENT OF PROFESSIONAL SERVICE, IS THE PROPERTY OF THE ENGINEER AND IS NOT TO BE USED, IN WHOLE OR IN PART FOR ANY OTHER PROJECT WITHOUT THE PRIOR WRITTEN AUTHORIZATION OF THE ENGINEER.

WOOD DETAILS

S-601

C:\revit_local\22072_NVC_S23C_jackH6UJH.rvt
10/10/2023 11:52:43 AM

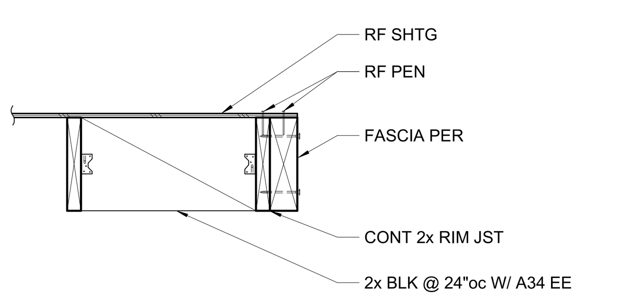

20 FASCIA AT RAFTER
3/4" = 1'-0"

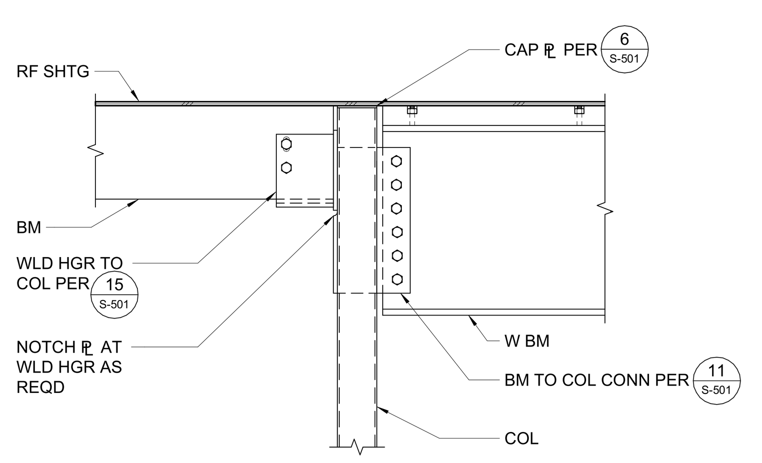

21 BEAM TO END OF BEAM CONNECTION
3/4" = 1'-0"

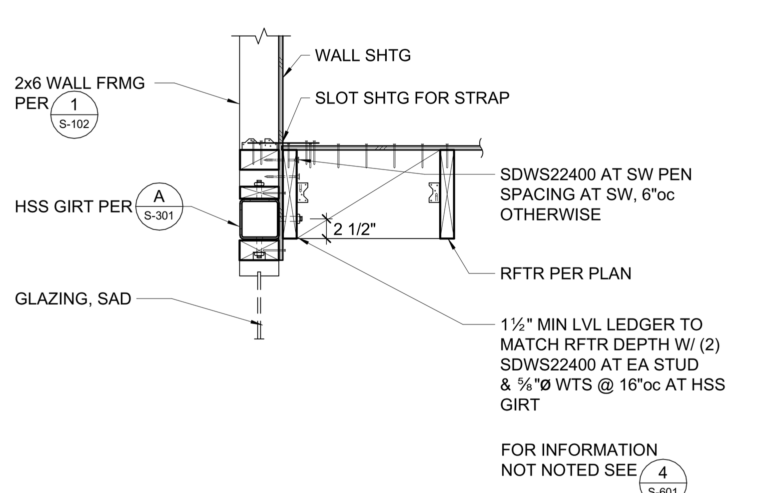

22 LEDGER AT BREEZEWAY
3/4" = 1'-0"

23 NOT USED
3/4" = 1'-0"

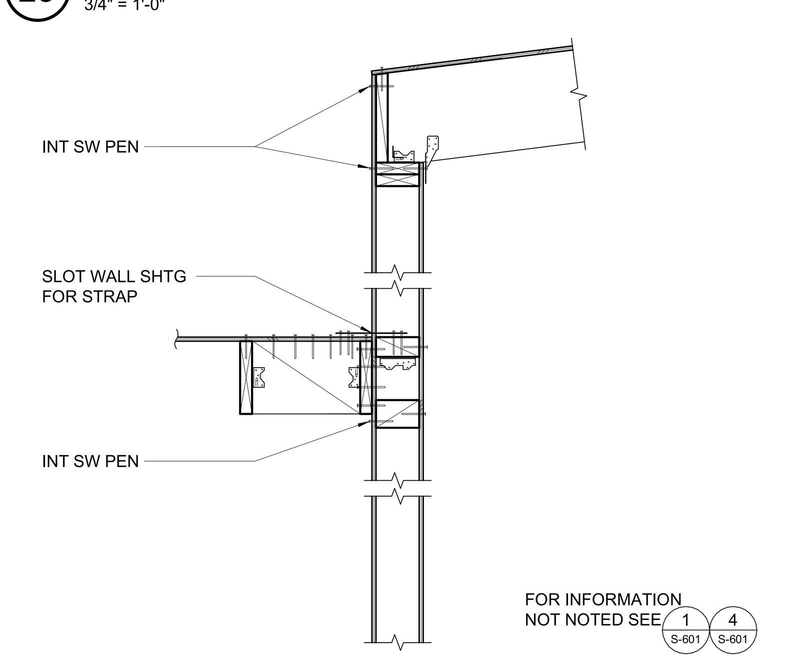

24 PARALLEL FRAMING AT EXTERIOR WALL - RAFTERS PARAPET
3/4" = 1'-0"

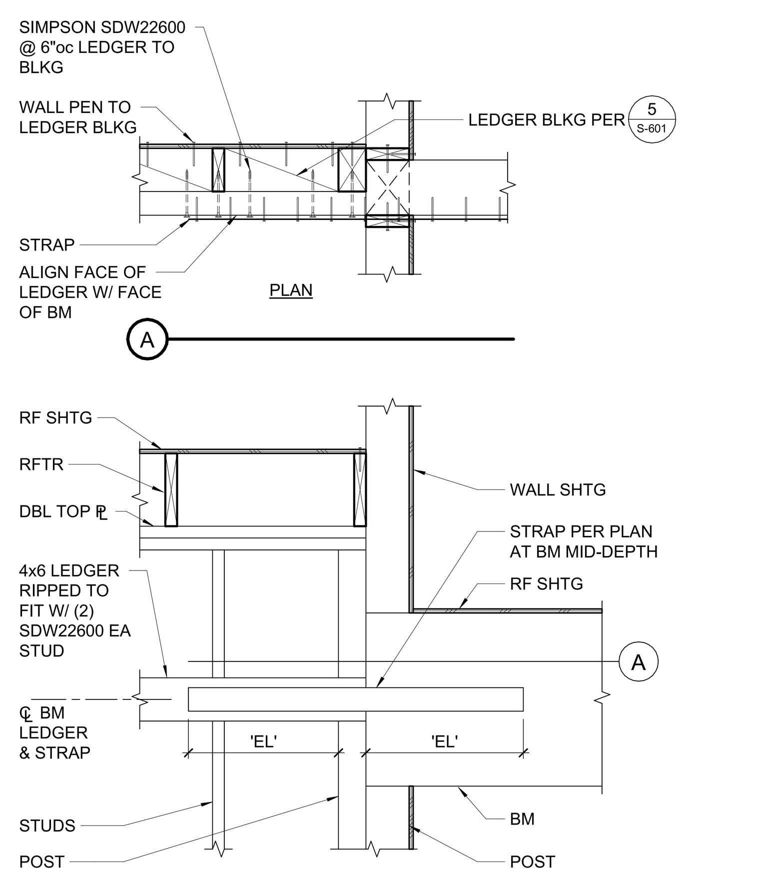

16 BEAM TO LEDGER TIE
3/4" = 1'-0"

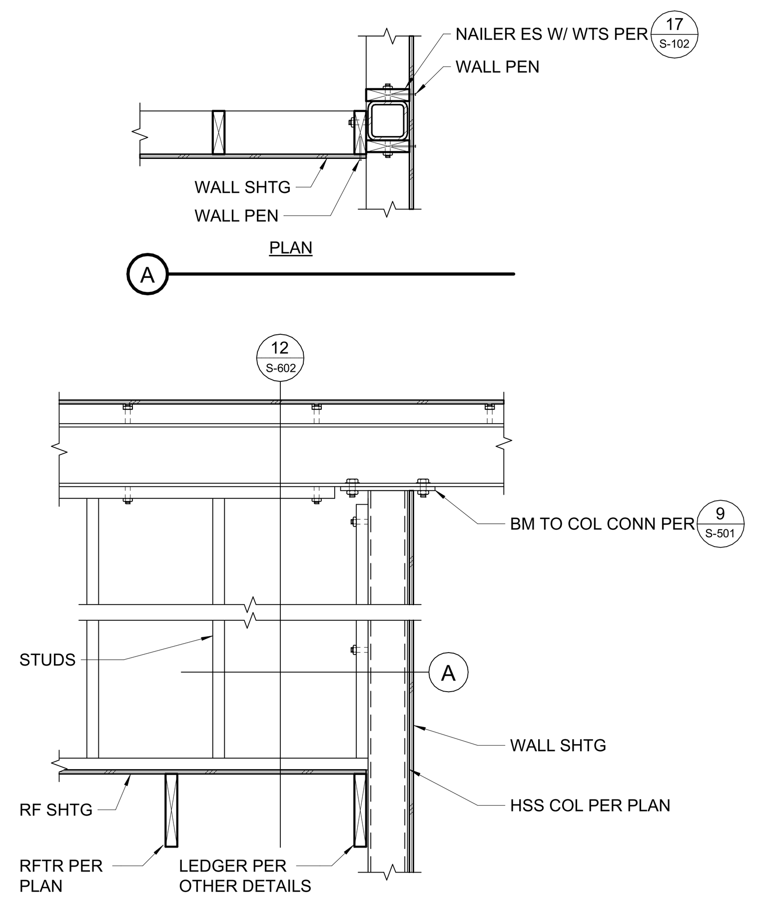

17 MECHANICAL WELL WALL FRAMING
3/4" = 1'-0"

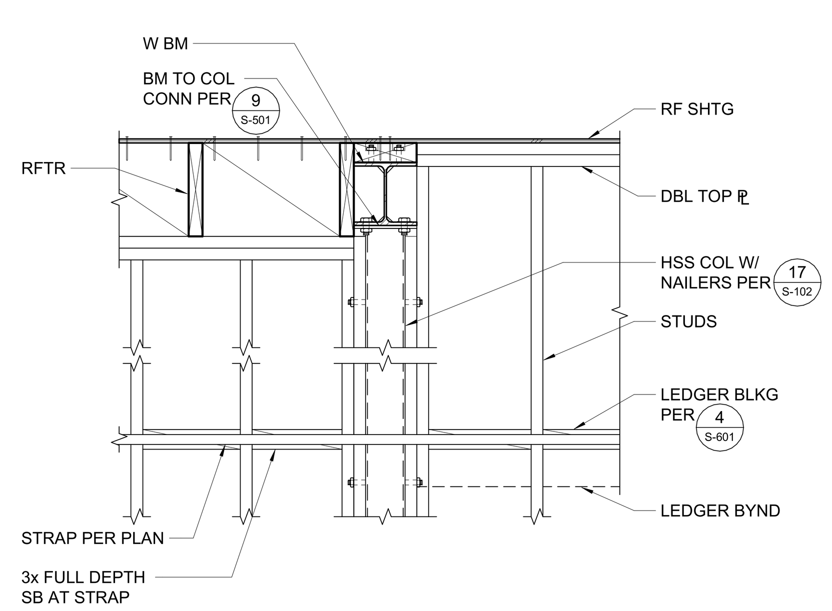

18 TIE AT HSS COLUMN
3/4" = 1'-0"

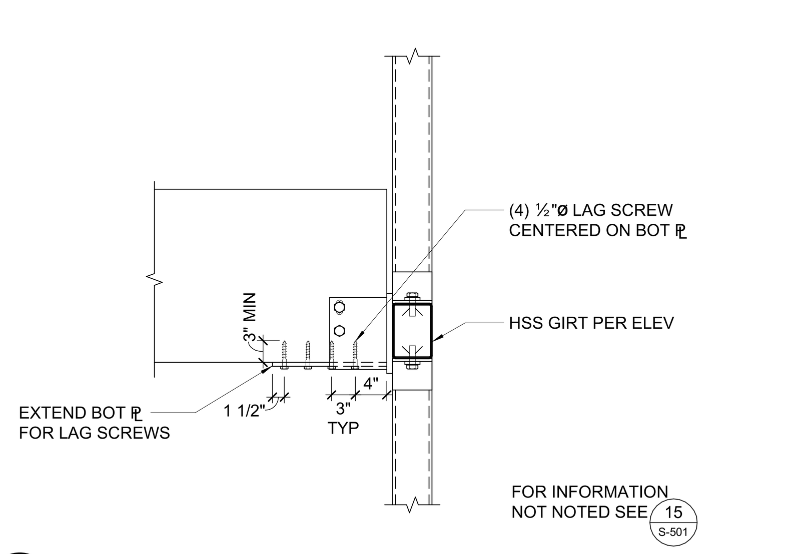

19 BEAM CONNECTION AT HSS COLUMN
3/4" = 1'-0"

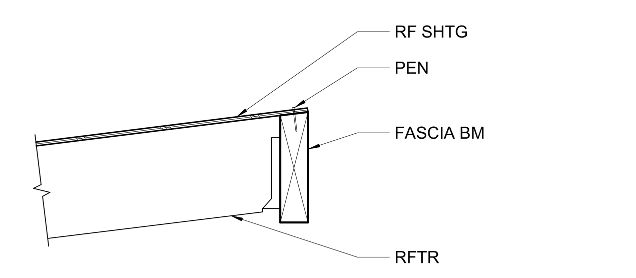

11 RAFTER AT FASCIA
3/4" = 1'-0"

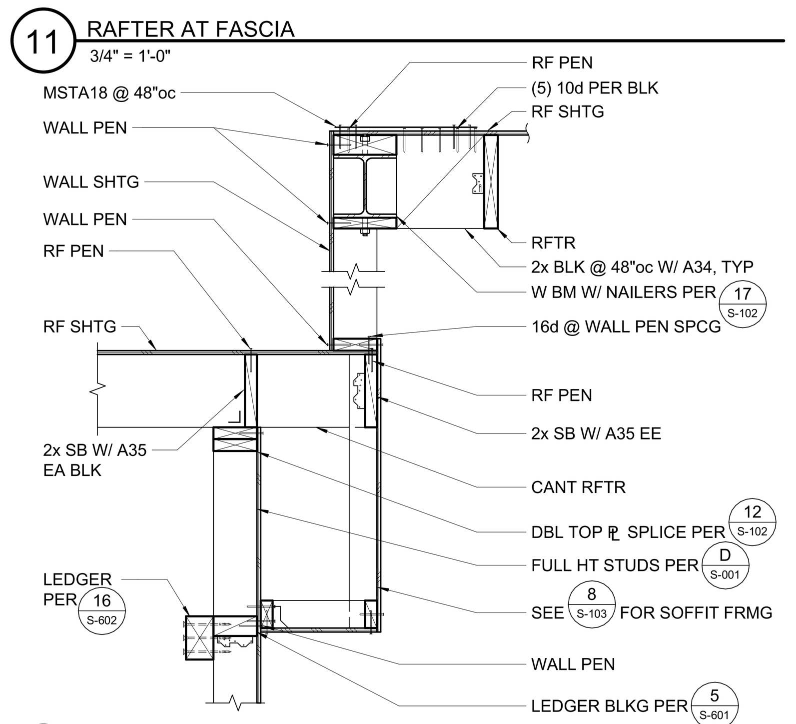

12 FRAMING AT MECHANICAL WELL
3/4" = 1'-0"

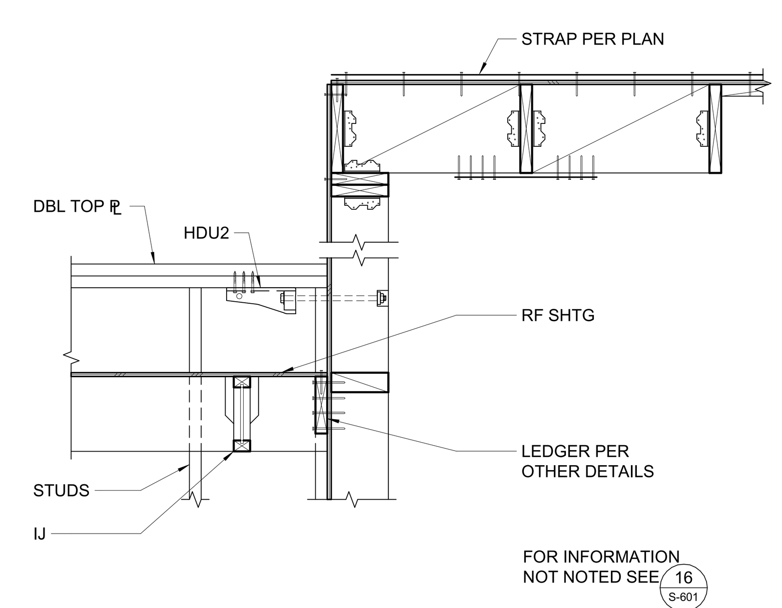

13 HOLDOWN TIE
3/4" = 1'-0"

NOTE:
SUPPORTS FOR SLIDING DOORS ARE DESIGNED FOR THE FOLLOWING CRITERIA:
1. DOORS ARE TOP HUNG, WEIGHING NO MORE THAN 5 PSF.
2. ALL FRAMING AND FINISHES SHALL BE INSTALLED PRIOR TO DOOR INSTALLATION.
3. HEADERS AND OTHER STRUCTURAL SUPPORTS ARE DESIGNED FOR ¼" LIVE LOAD DEFLECTION AFTER DOOR INSTALLATION.

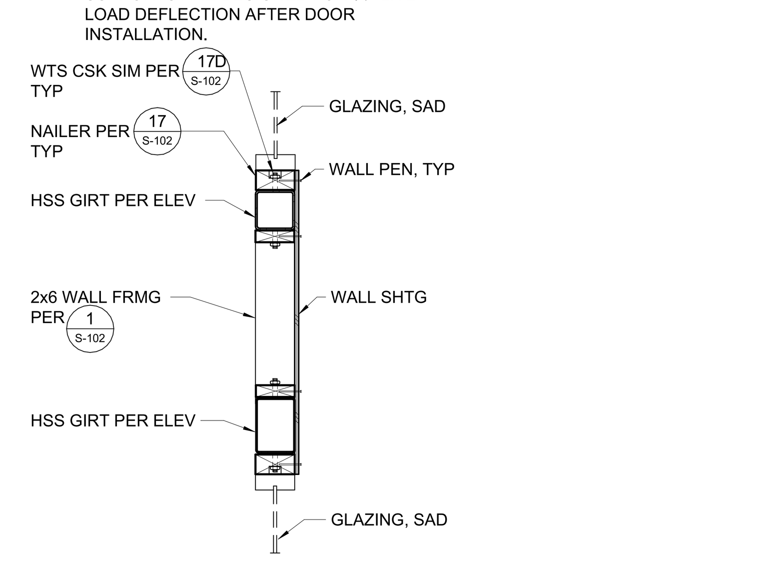

14 HSS GIRT
3/4" = 1'-0"

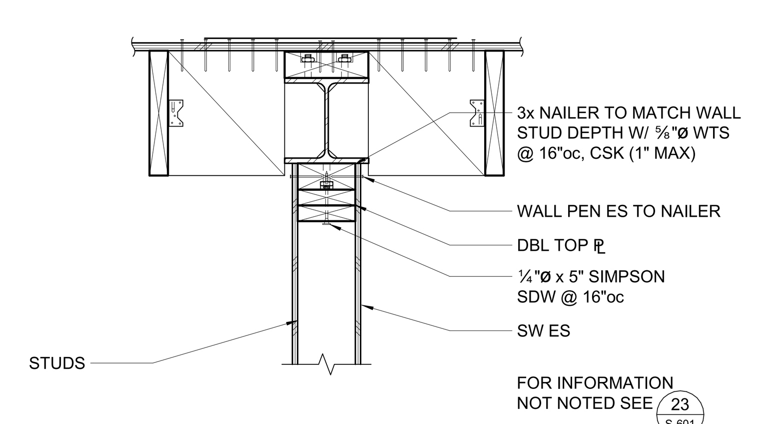

15 SHEAR WALL AT W BEAM
1" = 1'-0"

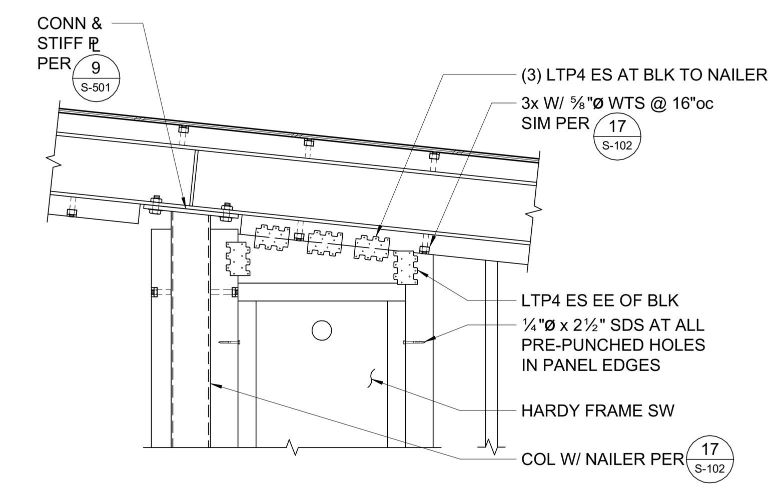

6 HARDY FRAME SHEAR WALL AT BEAM
3/4" = 1'-0"

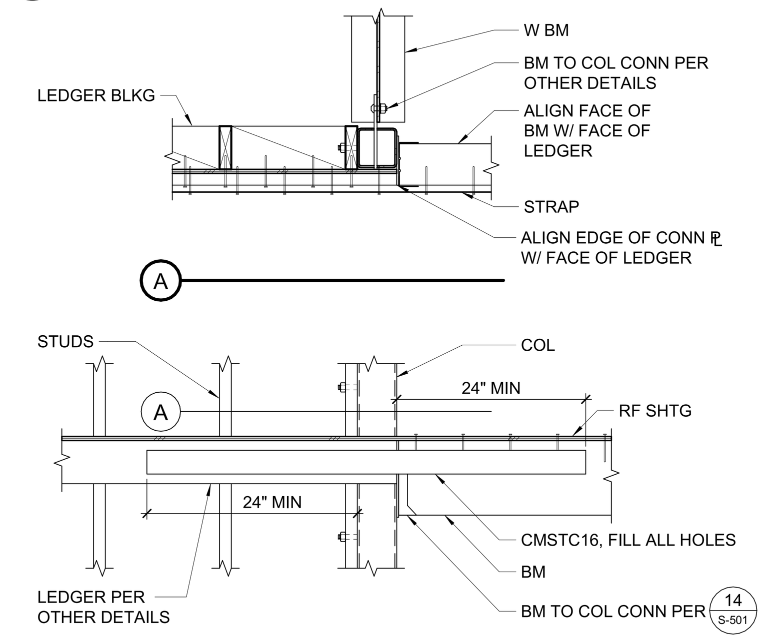

7 BEAM TO LEDGER CONNECTION
3/4" = 1'-0"

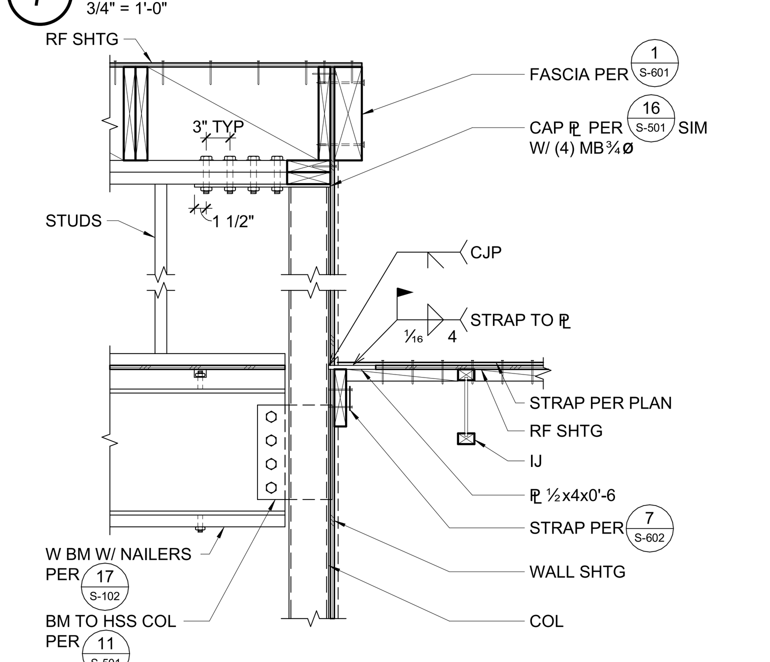

8 TIE AT HSS COLUMN
3/4" = 1'-0"

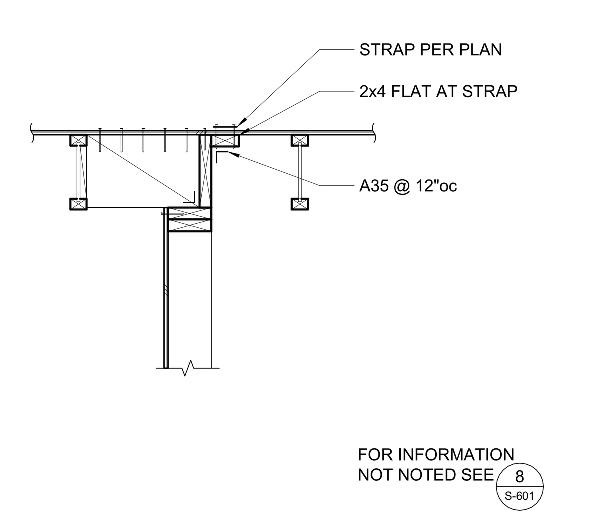

9 INTERIOR SHEAR WALL
3/4" = 1'-0"

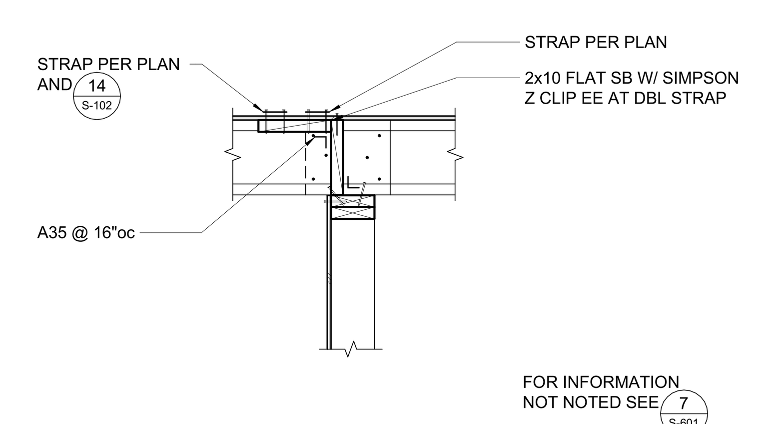

10 INTERIOR SHEAR WALL
3/4" = 1'-0"

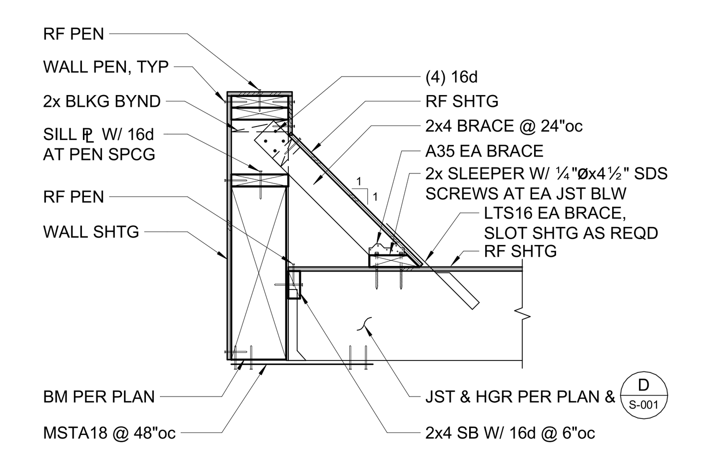

1 BRACING AT BREEZEWAY ROOF
3/4" = 1'-0"

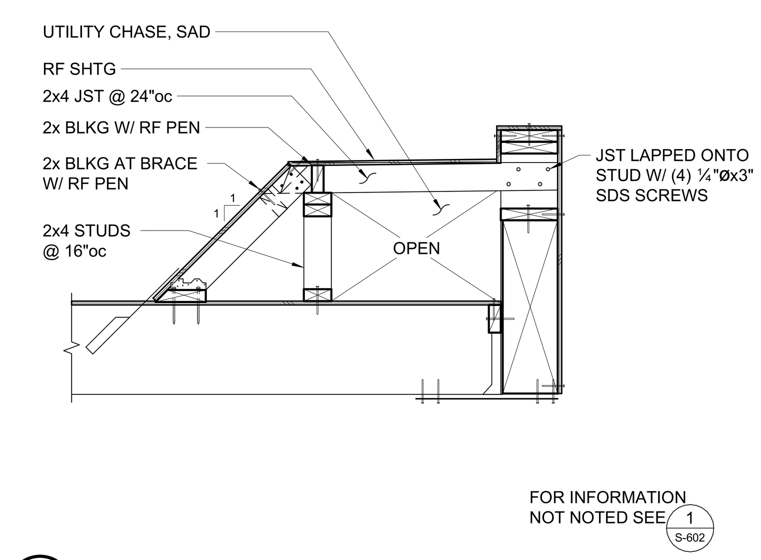

2 UTILITY CHASE BRACING AT BREEZEWAY ROOF
3/4" = 1'-0"

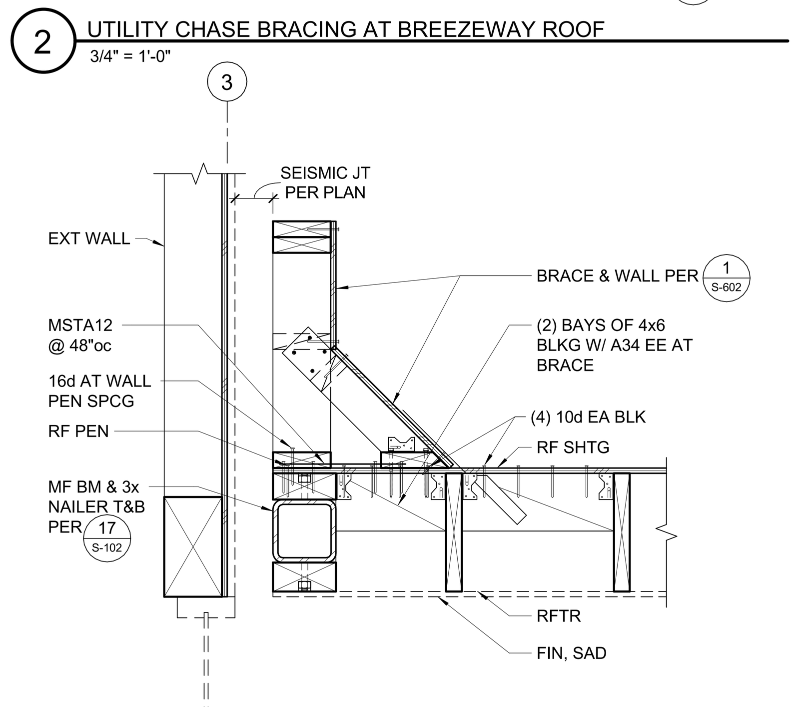

3 MOMENT FRAME BEAM
1" = 1'-0"

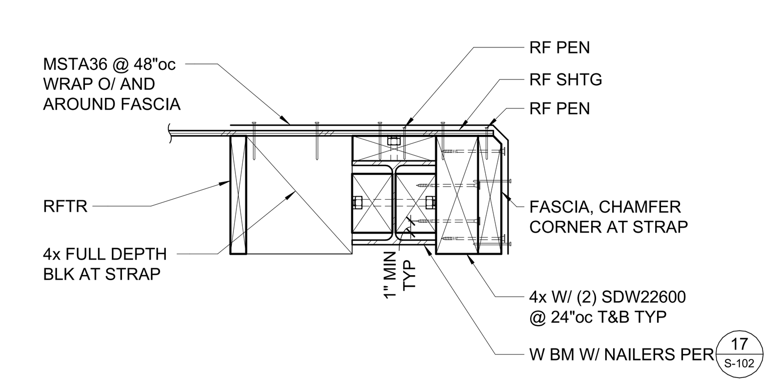

4 BEAM AT EVE
1" = 1'-0"

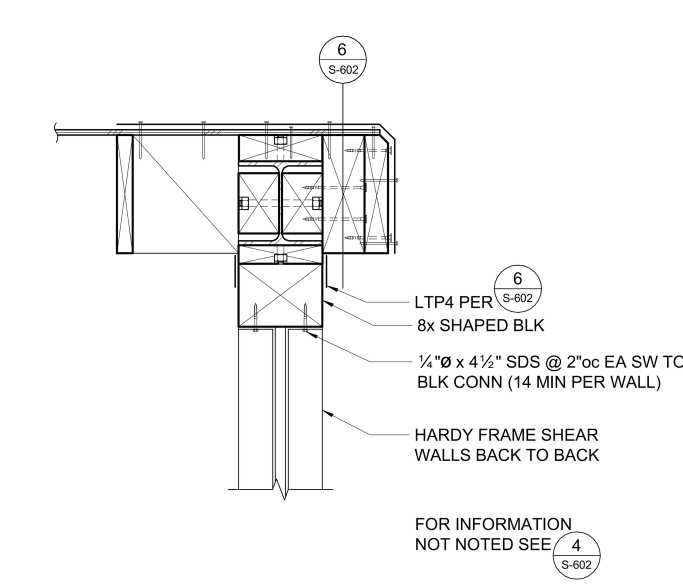

5 HARDY FRAME SHEAR WALL
1" = 1'-0"

IDENTIFICATION STAMP
DIV. OF THE STATE ARCHITECT
APP: 01-120890 INC:
REVIEWED FOR
SS ☑ FLS ☑ ACS ☑
DATE: 10/25/2023

TLCDARCHITECTURE
520 Third St. #250
Santa Rosa, CA 95401
o: 707.525.5600
f: 707.525.5616
tlcd.com

CONSULTANT:

ZFA STRUCTURAL ENGINEERS
1212 fourth street | suite z
santa rosa ca 95404
zfa job no. 22072
zfa.com
707.526.0992
copyright © 2023

STAMP:
CHRIS S. WARNER No. S4613 STRUCTURAL STATE OF CALIFORNIA REGISTERED PROFESSIONAL ENGINEER
10/10/2023

REVISIONS:

Number	Date	Description
1	Date 1	DSA

NVC WINE EDUCATION CENTER

2277 NAPA VALLEJO HWY
NAPA, CA 94558

NAPA VALLEY COLLEGE

DSA PROJECT NUMBER
01-120890
PROJECT NUMBER:
22072
DATE:
4/12/2023
ENGINEER:
JLT / NLG
PROJECT MANAGER:
CEM

THIS DOCUMENT AND THE IDEAS INCORPORATED HEREIN, AS AN INSTRUMENT OF PROFESSIONAL SERVICE, IS THE PROPERTY OF THE ENGINEER AND IS NOT TO BE USED, IN WHOLE OR IN PART FOR ANY OTHER PROJECT WITHOUT THE PRIOR WRITTEN AUTHORIZATION OF THE ENGINEER.

WOOD DETAILS

S-602

C:\revit_local\22072_NVC_S23C_jacktH6UJH.rvt
10/10/2023 11:52:44 AM

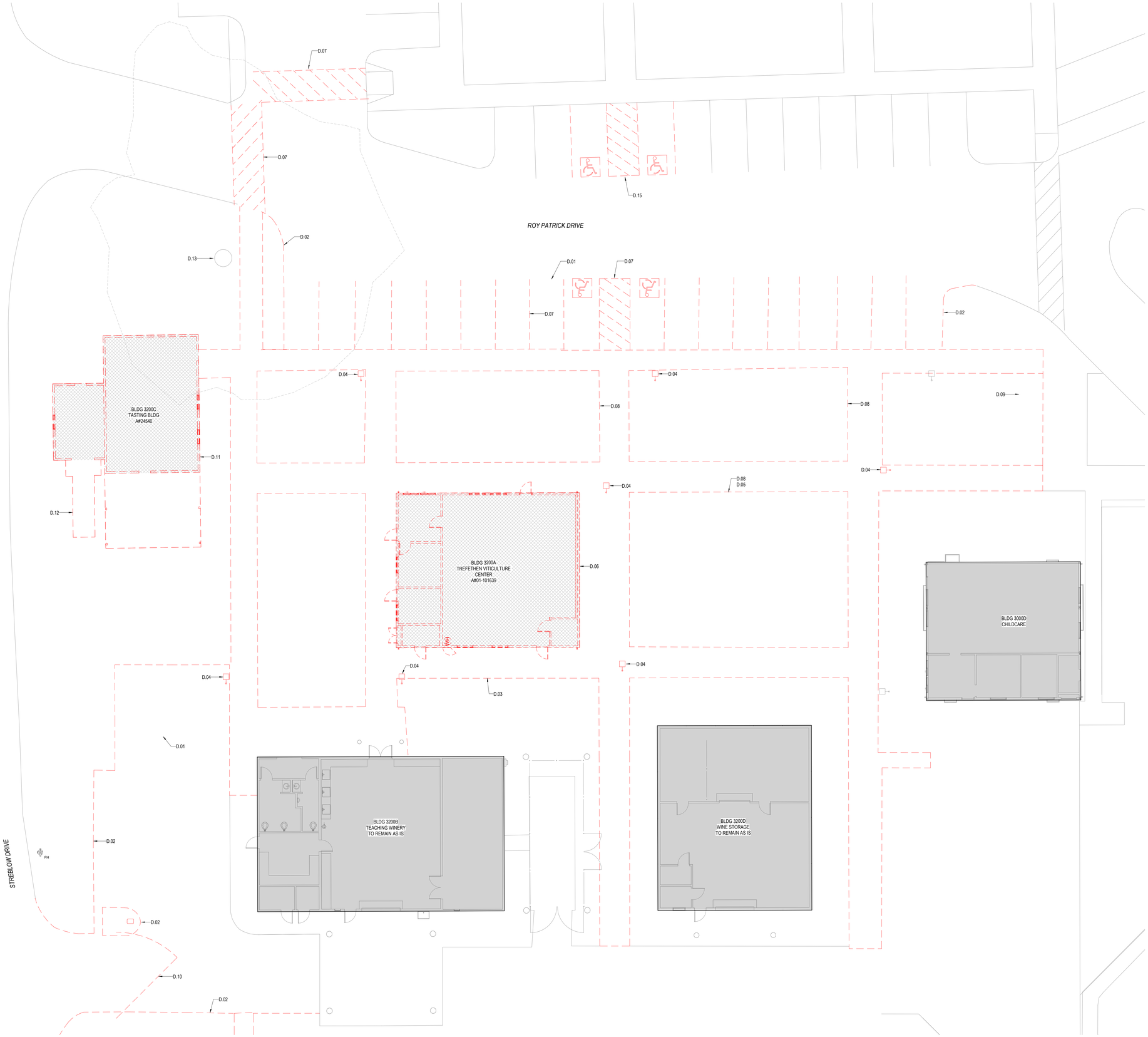

1 PARTIAL SITE PLAN - DEMOLITION
1" = 10'-0"

GENERAL DEMOLITION NOTES:

A. SEE G-002 FOR ADDITIONAL DEMOLITION WORK REQUIRED AT PASSENGER DROP-OFF AREA.

DEMOLITION DRAWING NOTES

D.01	REMOVE (E) PAVING AS REQUIRED FOR NEW WORK, SCD
D.02	REMOVE (E) CONCRETE CURB, SCD
D.03	REMOVE (E) CONCRETE FLATWORK, SCD TYP
D.04	REMOVE (E) LIGHT STANDARD AND CONCRETE BASE, SED FOR ASSOCIATED WORK, TYP
D.05	REMOVE (E) TREES, PLANTINGS AND ASSOCIATED IRRIGATION, SLD
D.06	REMOVE (E) MODULAR BUILDING, FOUNDATION SYSTEM AND ASSOCIATED UTILITIES
D.07	REMOVE (E) PAVEMENT MARKINGS
D.08	REMOVE (E) RAISED PLANTER(S), TYP
D.09	AREA OF (N) TRANSFORMER INSTALLATION, SCD & SED FOR ASSOCIATED WORK
D.10	REMOVE (E) GATE AND ASSOCIATED HARDWARE
D.11	(E) BUILDING, FOUNDATION AND UTILITIES TO BE REMOVED AS PART OF PHASE 1 WORK. (E) UTILITIES TO BE CAPPED, SCD
D.12	(E) CONCRETE FLATWORK, LANDSCAPING, IRRIGATION, UTILITIES, ETC ASSOCIATED WITHIN THE PHASE 2 AREA TO BE REMOVED AS REQUIRED FOR PHASE 2 PAD PREPARATION
D.13	(E) OAK TREE. PROTECT DURING CONSTRUCTION, SLD
D.15	REMOVE PAVING AT REWORKED ACCESSIBLE PARKING, SCD

AGENCY APPROVAL STAMP:

IDENTIFICATION STAMP
DIV. OF THE STATE ARCHITECT
APP: 01-120890 INC:
REVIEWED FOR
SS ☑ FLS ☑ ACS ☑
DATE: 10/25/2023

TLCDARCHITECTURE
520 Third St. #250
Santa Rosa, CA 95401
o: 707.525.5600
f: 707.525.5616
tlcd.com

CONSULTANT:

STAMP:

LICENSED ARCHITECT
CARL SERVAIS
C-32941
REN:12/31/23
STATE OF CALIFORNIA

REVISIONS:

Number	Date	Description

NAPA VALLEY COLLEGE WINE EDUCATION CENTER

2277 NAPA VALLEJO HWY
NAPA, CA 94558

NAPA VALLEY COLLEGE

DSA APPLICATION NUMBER:
01-120890

TLCD PROJECT NUMBER:
21062.00

DATE:
04/12/2023

PARTIAL SITE PLAN - DEMOLITION WORK

A-101

© THESE DRAWINGS ARE INSTRUMENTS OF SERVICE AND ARE THE SOLE PROPERTY OF TLCD ARCHITECTURE. ANY USE WITHOUT WRITTEN CONSENT IS PROHIBITED.

10/4/2023 8:09:00 AM

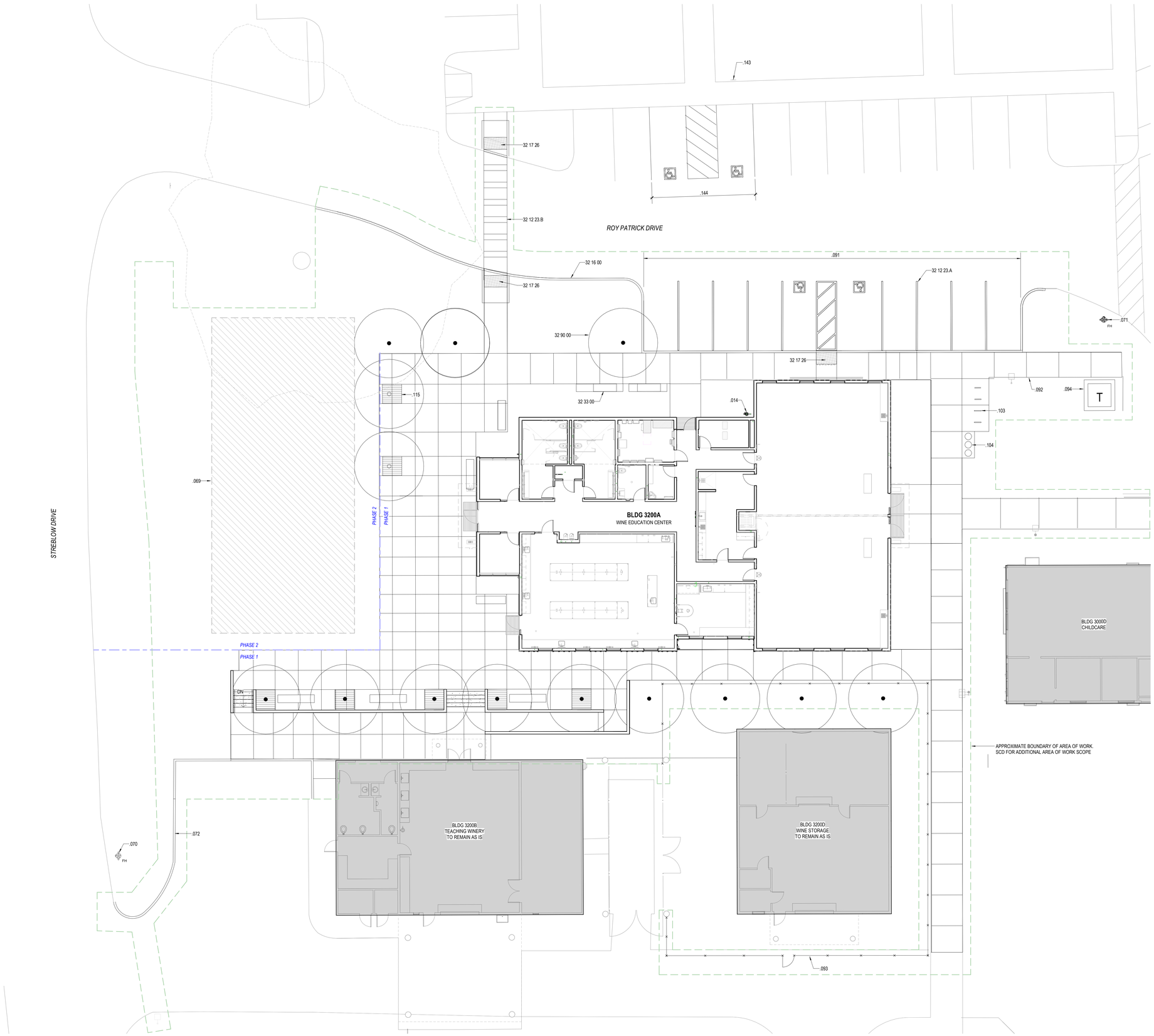

1 PARTIAL SITE PLAN - PHASE 1

1" = 10'-0"

GENERAL SITE PLAN NOTES

A. SEE SHT G-002 FOR TWO NEW UNAUTHORIZED PARKING SIGNS TO BE INSTALLED (SITE DRAWING NOTE S.13) AS PART OF THE SCOPE OF NEW WORK.

B. SEE SHT G-002 FOR NEW WORK AT EXISTING PASSENGER DROP-OFF AREA (SITE DRAWING NOTE S.05) AS PART OF THE SCOPE OF NEW WORK.

REFERENCE KEYNOTE

32 12 23.A	PAVEMENT MARKINGS AND SIGNS - PARKIKNG STRIPING, SCD
32 12 23.B	PAVEMENT MARKINGS AND SIGNS - CROSSWALK MARKING, SCD
32 16 00	CONCRETE CURB, GUTTER AND SIDEWALKS, SCD
32 17 26	CAST CONCRETE DETECTIBLE/TACTILE WARNING, SCD
32 33 00	SITE FURNISHINGS, SLD
32 90 00	PLANTING, SLD

DRAWING NOTES

.014	FIRE RISER, SEE FIRE PROTECTION DWG'S & SCD. PAINT WITH HIGH PERFORMANCE COATING TO MATCH SURROUND
.069	PREPARATION OF PHASE 2 BUILDING PAD PART OF PHASE 1 WORK
.070	(E) FIRE HYDRANT
.071	(N) FIRE HYDRANT, SCD
.072	(N) CONCRETE CURB, SCD, TYP
.091	(N) PARKING IMPROVEMENTS, SCD
.092	(N) CONCRETE PAVING, SCD AND SLD, TYP
.093	(N) FENCING AROUND (E) BUILDING, SLD
.094	(N) TRANSFORMER AND CONCRETE PAD, SCD AND SED FOR ASSOCIATED WORK
.103	(N) BIKE RACKS, SLD
.104	(N) RECYCLE CONTAINERS, SLD
.115	TREE GRATE(S), SLD
.143	INSTALL (N) ACCESSIBLE PARKING SIGN, SEE C-502
.144	(N) PAVING AND PAVEMENT MARKINGS, SCD FOR LIMITS AND SCOPE OF WORK

AGENCY APPROVAL STAMP:

IDENTIFICATION STAMP
DIV. OF THE STATE ARCHITECT
APP: 01-120890 INC:
REVIEWED FOR
SS ☑ FLS ☑ ACS ☑
DATE: 10/25/2023

TLCDARCHITECTURE
520 Third St. #250
Santa Rosa, CA 95401
o: 707.525.5600
f: 707.525.5616
tlcd.com

CONSULTANT:

STAMP:

LICENSED ARCHITECT
CARL SERRANO
C-32047
REN:12/31/23
STATE OF CALIFORNIA

REVISIONS:

Number	Date	Description

NAPA VALLEY COLLEGE WINE EDUCATION CENTER

2277 NAPA VALLEJO HWY
NAPA, CA 94558

NAPA VALLEY COLLEGE

DSA APPLICATION NUMBER:
01-120890

TLCD PROJECT NUMBER:
21062.00

DATE:
04/12/2023

PARTIAL SITE PLAN - PHASE 1

A-102

© THESE DRAWINGS ARE INSTRUMENTS OF SERVICE AND ARE THE SOLE PROPERTY OF TLCD ARCHITECTURE. ANY USE WITHOUT WRITTEN CONSENT IS PROHIBITED.

10/4/2023 8:08:12 AM

REFERENCE KEYNOTE

32 13 12	LANDSCAPE CONCRETE, SLD
32 14 12	CONCRETE UNIT PAVING, SLD
32 33 00	SITE FURNISHINGS, SLD

DRAWING NOTES

.092	(N) CONCRETE PAVING, SCD AND SLD, TYP
.131	ENTIRE BENCH TO BE CONSTRUCTED IN PHASE 2 WORK

1 **PARTIAL SITE PLAN - PHASE 2**

1" = 10'-0"

10/4/2023 7:54:29 AM

AGENCY APPROVAL STAMP:

IDENTIFICATION STAMP
DIV. OF THE STATE ARCHITECT
APP: 01-120890 INC:
REVIEWED FOR
SS ☑ FLS ☑ ACS ☑
DATE: 10/25/2023

TLCDARCHITECTURE
520 Third St. #250
Santa Rosa, CA 95401
o: 707.525.5600
f: 707.525.5616
tlcd.com

CONSULTANT:

STAMP:

LICENSED ARCHITECT
CARL SERVAIS
C-32947
REN:12/31/23
STATE OF CALIFORNIA

REVISIONS:

Number	Date	Description

NAPA VALLEY COLLEGE WINE EDUCATION CENTER

2277 NAPA VALLEJO HWY
NAPA, CA 94558

NAPA VALLEY COLLEGE

DSA APPLICATION NUMBER:
01-120890

TLCD PROJECT NUMBER:
21062.00

DATE:
04/12/2023

PARTIAL SITE PLAN - PHASE 2

A-103

© THESE DRAWINGS ARE INSTRUMENTS OF SERVICE AND ARE THE SOLE PROPERTY OF TLCD ARCHITECTURE. ANY USE WITHOUT WRITTEN CONSENT IS PROHIBITED.

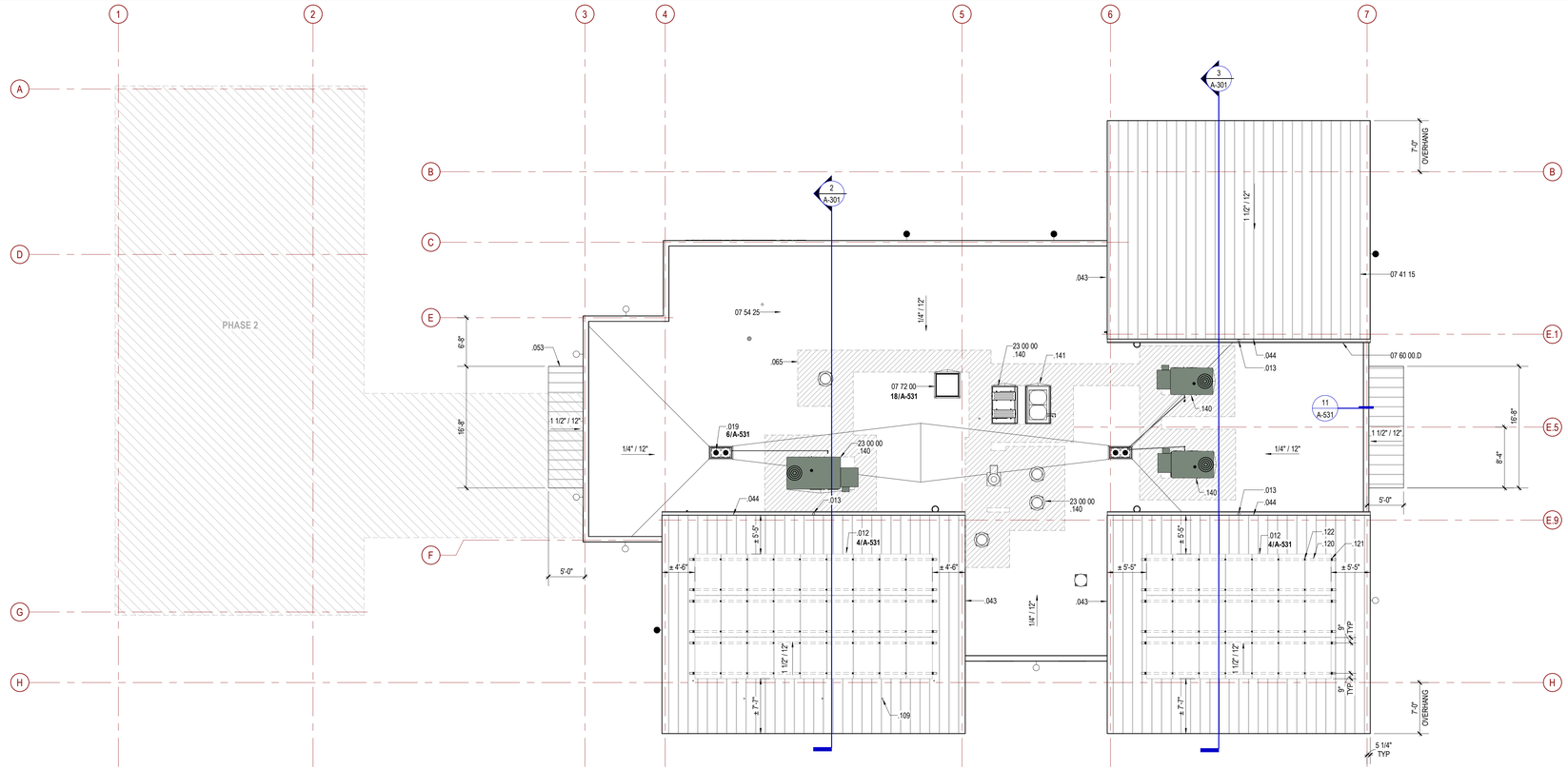

2 ROOF PLAN - PHASE 1

1/8" = 1'-0"

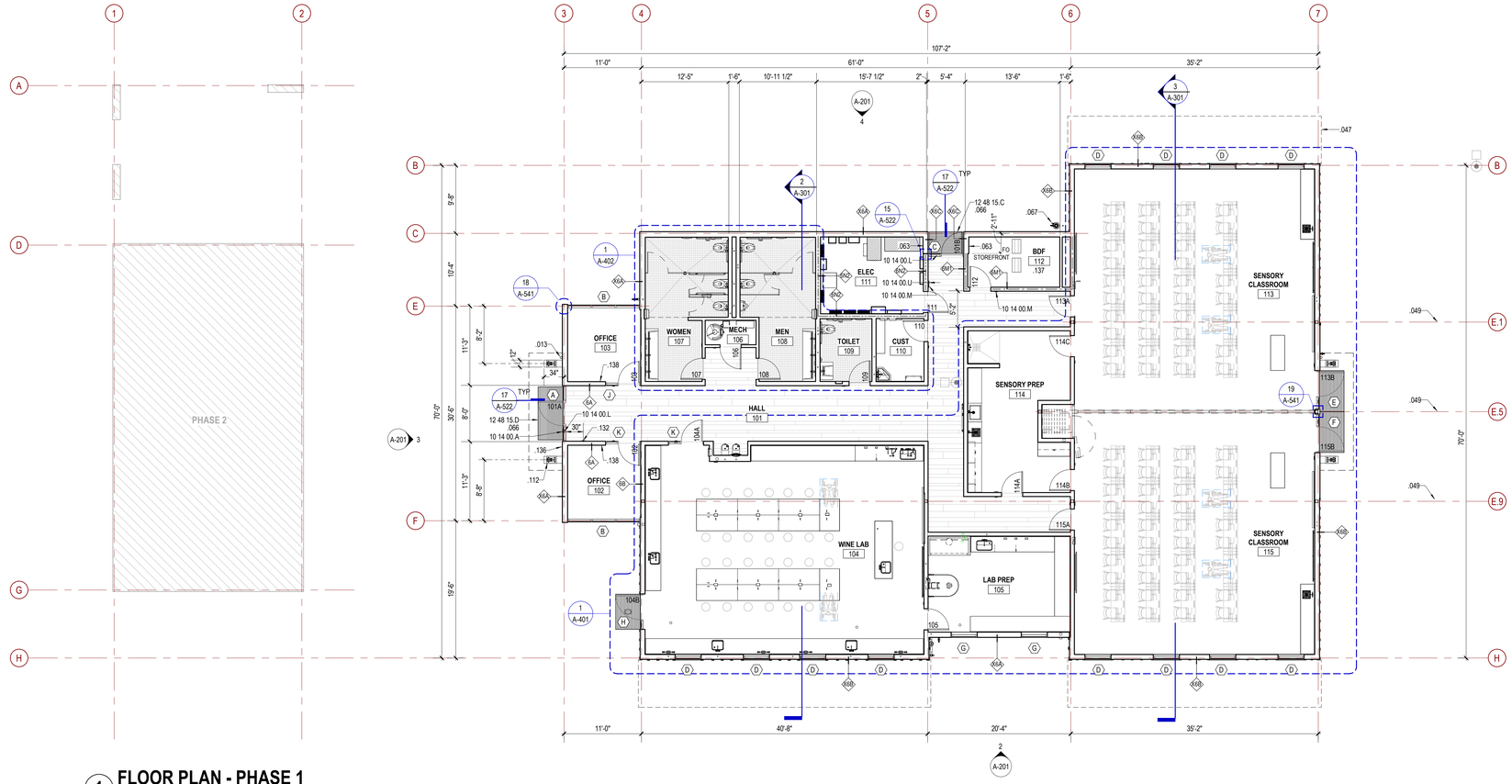

1 FLOOR PLAN - PHASE 1

1/8" = 1'-0"

PROJECT NORTH

TRUE NORTH

GENERAL FLOOR PLAN NOTES

A. THESE NOTES APPLY TO ALL FLOOR PLAN SHEETS.

B. GRIDS ARE TO FACE OF STUD, UON.

C. ALL DIMENSIONS ARE TO FACE OF STUD, UON. DIMENSIONS WITH ARROWHEADS ARE TO FACE OF FINISH, UON.

D. FOR WALL / PARTITION LEGEND, SEE SHT A-121.

E. FOR TYPICAL CLEARANCES AT DOORS, SEE SHT A-511.

F. FOR TYPICAL CLERANCES AT FIXTURES AND TOILET ACCESSORIES, SEE SHT A-511.

G. ALL INTERIOR WALLS TO RECEIVE SOUND ATTENUATION BLANKETS FULL HT.

REFERENCE KEYNOTE

07 41 15	MANUFACTURED STANDING SEAM ROOFING
07 46 50	GFRC FACADE SYSTEM - REIDER OKO SKIN STRIPES
07 54 25	THERMOPLASTIC POLYOLEFIN (TPO) ROOFING - SELF-ADHERED
07 60 00.D	FLASHING AND SHEET METAL - GUTTERS & DOWNSPOUTS
07 72 00	ROOF HATCHES
10 14 00.A	SIGNAGE - ISA, SEE 20A/A-511
10 14 00.L	SIGNAGE - EXIT, SEE 20L/A-511
10 14 00.M	SIGNAGE - ROOM SIGNAGE, SEE 20M/A-511
10 14 00.U	SIGNAGE - BATTERY STORAGE, SEE 20H/A-511
12 48 15.C	RECESSED ENTRY GRILLES - 36" X 57"
12 48 15.D	RECESSED ENTRY GRILLES - 36" X 91"
23 00 00	HEATING, VENTILATION AND AIR CONDITIONING (HVAC) EQUIPMENT, SMD

DRAWING NOTES

.012	SOLAR PANEL FIELD AREA (48 PANELS TOTAL), SED FOR ASSOCIATED WORK. "ACECLAMP" A2 NON-PENETRATING SOLAR MOUNTING CLAMPS WITH SOLAR-SNAP SOLAR RACKING SYSTEM. A2 CLAMP AT EACH ROOF SEAM (16" OC). SED FOR ADDITIONAL INFORMATION
.013	3" DIA SCHEDULE 40 GALVANIZED RWL. PAINT WITH HIGH PERFORMANCE COATING TO MATCH SURROUND, TYP
.019	ROOF DRAIN / OVERFLOW DRAIN, SPD
.043	INSTALL BATTENS AT SIDE WALL - BOTTOM AT 4" BELOW TOP OF COPING
.044	INSTALL BATTENS AT BACK WALL - BOTTOM AT 4" BELOW TOP OF COPING
.047	LINE OF ROOF OVERHANG ABOVE, TYP
.049	GRID IS TO CENTERLINE OF STRUCTURAL STEEL (AND UPPER WALL WHERE OCCURS)
.053	NOTE: THIS ENTRY CANOPY STRUCTURE TO BE REMOVED FOR PHASE 2 CONSTRUCTION.
.063	ALIGN EXTERIOR PLASTER FINISH WITH INTERIOR GYP BD FINISH THIS EXTERIOR WALL
.065	TPO WALKWAY PADS AS RECOMMENDED BY ROOFING MANUFACTURER
.066	VERIFY DIMS IN FIELD PRIOR TO FABRICATION. PROVIDE DRAIN CENTERED AT RECESS, SPD & SCD
.067	FIRE SPRINKLER RISER, SEE FIRE PROTECTION DRAWINGS & SCD. PAINT WITH HIGH PERFORMANCE COATING, CUSTOM COLOR TO MATCH OKO SKIN
.109	VENT PIPE THROUGH ROOF, SPD
.112	VOID IN CONCRETE AROUND COLUMN BASE - SEE 5/A-301 FOR FURTHER INFORMATION, TYP
.120	PV PANEL SUPPORT RAIL(S), TYP
.121	PV PANEL END CLAMP(S), TYP
.122	PV PANEL MID CLAMP(S), TYP
.132	LOW ENERGY DOOR ACTUATOR, SED FOR ASSOCIATED WORK & DTL 19/A-522
.136	LOW ENERGY DOOR ACTUATOR (VERTICAL ACTUATION BAR COMPLYING WITH CBC 11B-404.2.9, EXCEPTION C), SED FOR ASSOCIATED WORK. MOUNT ON FACE OF FINISH WALL SURFACE. SEE DTL 19/A-522
.137	PROVIDE PLYWOOD AT WALLS PER ELECTRICAL DWG'S. DO NOT PAINT OVER FIRE RATING LABEL, TYP
.138	WINDOW ROLLER SHADES CONTROL SWITCH @ +48", SED FOR ASSOCIATED WORK
.140	PROVIDE 3" OF CLOSED-CELL SPRAY FOAM INSULATION AT UNDERSIDE OF ROOF SHEATHING AT LIMITS OF MECHANICAL UNIT CURB, TYP
.141	PROVIDE CRICKETS AT CURBS, TYP

ROOF MATERIAL LEGEND

07 41 15 MANUFACTURED STANDING SEAM ROOF, CLASS A, SEE **1/A-531**

07 54 25 THERMOPLASTIC POLYOLEFIN (TPO) ROOFING, CLASS A, SEE **17/A-531**

SOLAR PANEL FIELD, SED FOR ASSOCIATED WORK

WALL / PARTITION TAG LEGEND

FOR TYP EXTERIOR WALLS, SEE "WALL TYPES" SHT A-521
FOR TYP INTERIOR PARTITIONS, SEE "PARTITION TYPES" SHT A-521

WALL / PARTITION SYMBOL

LETTER INDICATES WALL / PARTITION TYPE - SEE EXTERIOR WALL DETAILS & INTERIOR PARTITION DETAILS

NUMBER INDICATES ASSEMBLY FIRE RATING IN HOURS (NON RATED WHEN NO NUMBER IS INDICATED)

NUMBER INDICATES STUD SIZE - SEE "STUD SIZE SCHEDULE" BELOW "X" INDICATES EXTERIOR WALL TYPE

STUD SIZE SCHEDULE

INDICATOR	STUD DEPTH (NOMINAL)	
2	1.5"	(2X2)
3	2.5"	(2X3)
4	3.5"	(2X4)
6	5.5"	(2X6)
8	7.25	(2X8)
10	9.25	(2X10)
12	11.25	(2X12)

NOTES:

1. TYP INTERIOR PARTITION IS TYPE 6A, UON
2. STUDS ARE AT 16" OC, UON

PV PANEL INSTALLATION NOTES (DSA IR 16-8):

5.1.3 Field Installation Quality Control Testing

All testing shall be performed by a DSA accepted Laboratory Evaluation Acceptance (LEA) laboratory approved by the Architect or Structural Engineer of Record (SEOR) and DSA for the project. The Project Inspector or designated Special Inspector shall observe the installation of all connecting devices to the seams. The approved plans shall clearly indicate the testing requirements. The load rate shall be per ICC-ES AC428 Section 3.2.5. The solar field test report shall include the number of tests performed at each building in each wind zone, any failures during testing, and any noticeable deformation after testing.

5.1.3.1 On New Roof

Field tests are required to verify proper installation of the seam connecting device. After all the connecting devices have been installed, test a minimum of 20 consecutive devices to twice the maximum allowable stress design (ASD) wind uplift load tributary to the connecting device based on the wind pressure at areas of discontinuity such as roof edges and ridges. If there is no failure in 20 consecutive tests, test 10 percent of the remaining installed connecting devices. If failure occurs before 20 consecutive successful tests are completed, then additional tests shall be performed until 20 consecutive successful tests are completed, then continue at a rate of 10 percent on the remaining installed devices. See Dtl 4/A-531.

AGENCY APPROVAL STAMP:

IDENTIFICATION STAMP
DIV. OF THE STATE ARCHITECT
APP: 01-120890 INC:
REVIEWED FOR
SS ☑ FLS ☑ ACS ☑
DATE: 10/25/2023

TLCDARCHITECTURE
520 Third St. #250
Santa Rosa, CA 95401
o: 707.525.5600
f: 707.525.5616
tlcd.com

CONSULTANT:

STAMP:

LICENSED ARCHITECT
CARL SERRANO
C-32363
REN:12/31/23
STATE OF CALIFORNIA

REVISIONS:

Number	Date	Description

NAPA VALLEY COLLEGE WINE EDUCATION CENTER

2277 NAPA VALLEJO HWY
NAPA, CA 94558

NAPA VALLEY COLLEGE

DSA APPLICATION NUMBER:
01-120890

TLCD PROJECT NUMBER:
21062.00

DATE:
04/12/2023

FLOOR PLAN, ROOF PLAN - PHASE 1

A-121

© THESE DRAWINGS ARE INSTRUMENTS OF SERVICE AND ARE THE SOLE PROPERTY OF TLCD ARCHITECTURE. ANY USE WITHOUT WRITTEN CONSENT IS PROHIBITED.

10/4/2023 7:54:34 AM

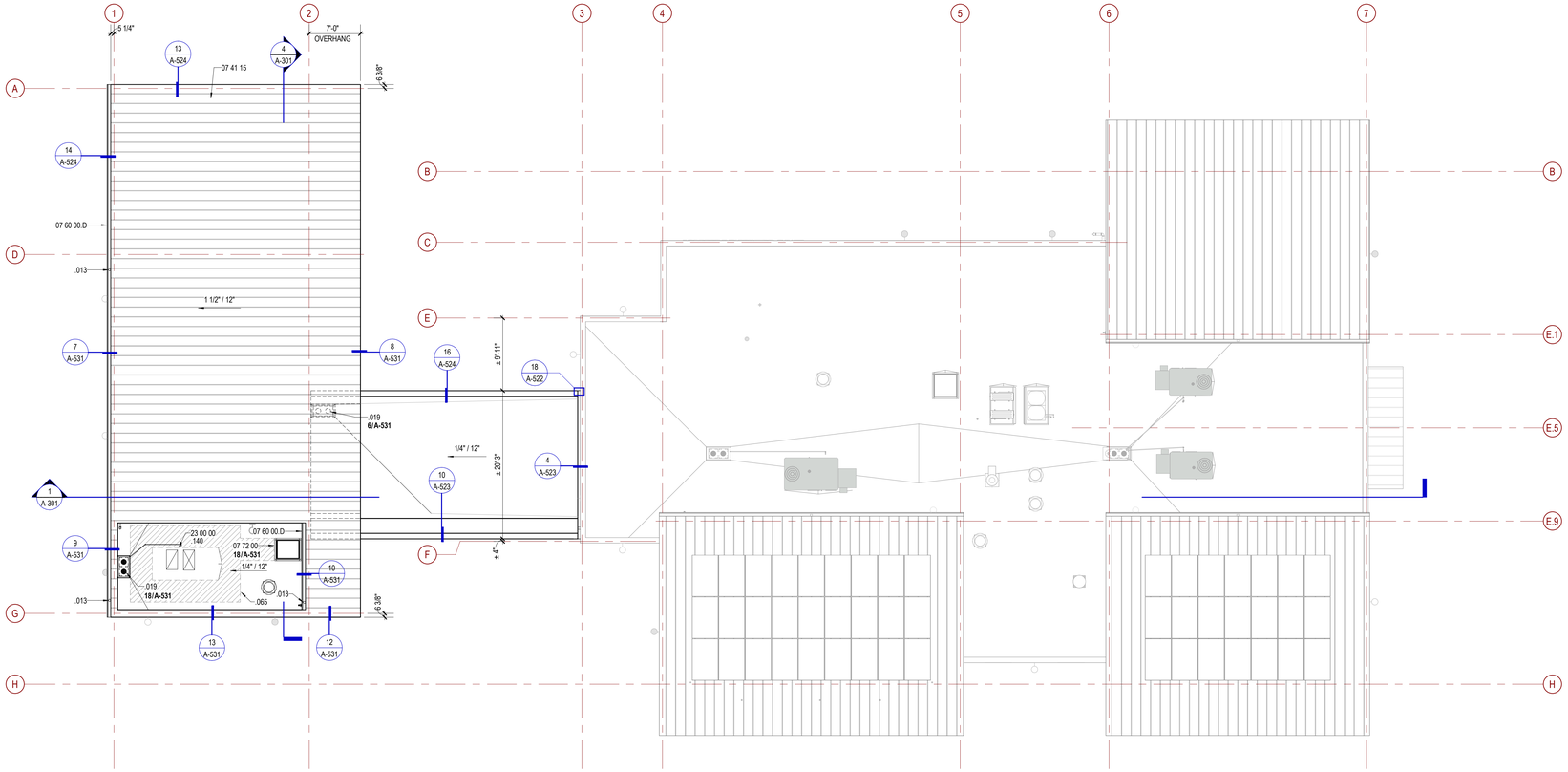

2 ROOF PLAN - PHASE 2

1/8" = 1'-0"

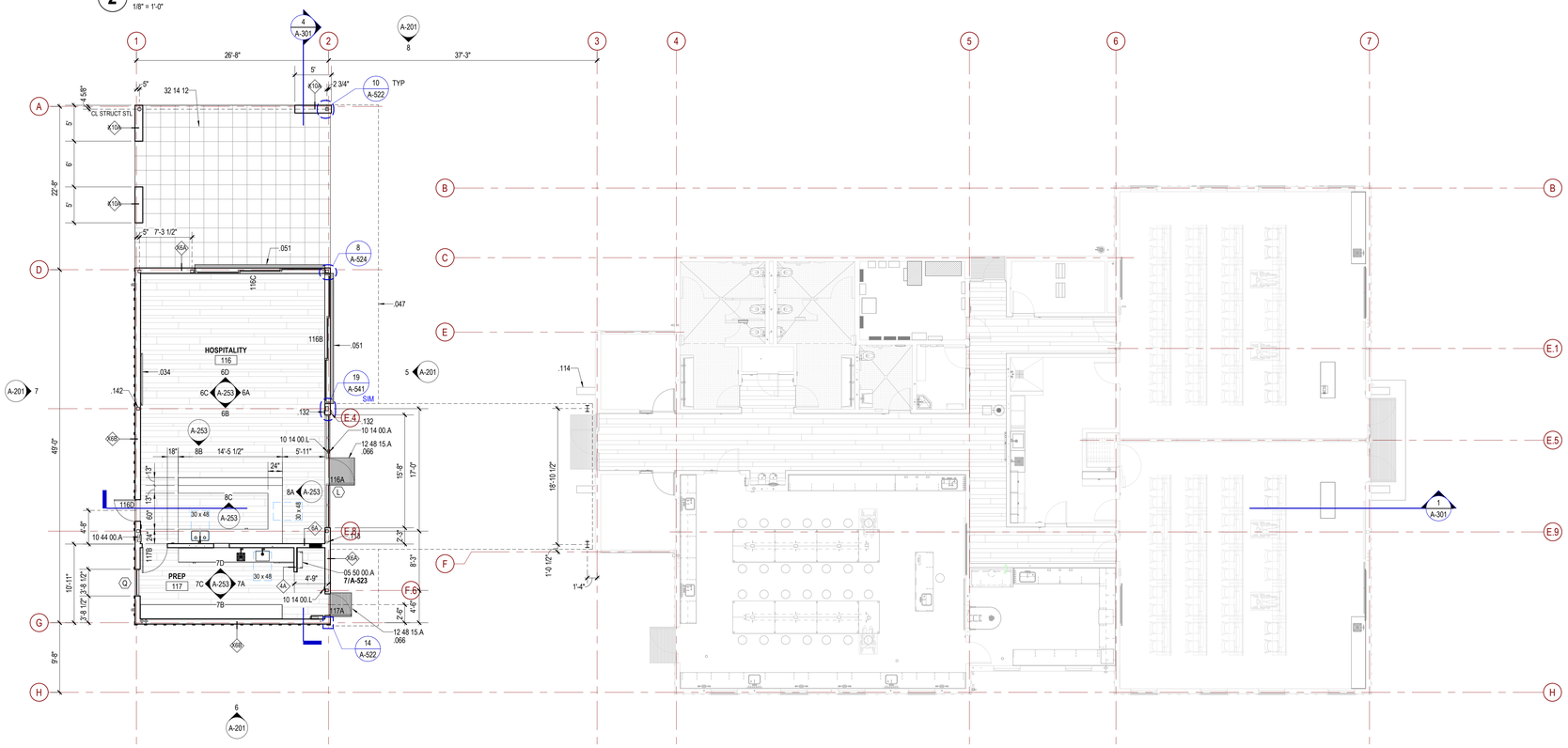

1 FLOOR PLAN - PHASE 2

1/8" = 1'-0"

PROJECT NORTH

TRUE NORTH

REFERENCE KEYNOTE

05 50 00.A	METAL FABRICATIONS - LADDER
07 41 15	MANUFACTURED STANDING SEAM ROOFING
07 60 00.D	FLASHING AND SHEET METAL - GUTTERS & DOWNSPOUTS
07 72 00	ROOF HATCHES
10 14 00.A	SIGNAGE - ISA, SEE 20A/A-511
10 14 00.L	SIGNAGE - EXIT, SEE 20L/A-511
10 44 00.A	FIRE PROTECTION CABINET - SEMI-RECESSED
12 48 15.A	RECESSED ENTRY GRILLES - 36" X 40"
23 00 00	HEATING, VENTILATION AND AIR CONDITIONING (HVAC) EQUIPMENT, SMD
32 14 12	CONCRETE UNIT PAVING, SLD

DRAWING NOTES

.013	3" DIA SCHEDULE 40 GALVANIZED RWL. PAINT WITH HIGH PERFORMANCE COATING TO MATCH SURROUND, TYP
.019	ROOF DRAIN / OVERFLOW DRAIN, SPD
.034	4' X 8' DRY ERASE WHITEBOARD WITH TRAY
.047	LINE OF ROOF OVERHANG ABOVE, TYP
.051	6" WIDE LINEAR STAINLESS STEEL ENTRANCE GRILLE FULL LENGTH OF SLIDING WALL UNIT WITH PAN AND 2" DRAIN CENTERED AT OPENING - "HENDRICKS ARCHITECTURAL METALS" OR EQUIVALENT
.065	TPO WALKWAY PADS AS RECOMMENDED BY ROOFING MANUFACTURER
.066	VERIFY DIMS IN FIELD PRIOR TO FABRICATION. PROVIDE DRAIN CENTERED AT RECESS, SPD & SCD
.113	RWL FROM BREEZEWAY ROOF IN WALL 12" CLEAR FROM HSS COLUMN, SPD
.114	CONCRETE FILL AT CONCRETE FLATWORK VOIDS WHERE ENTRY CANOPY COLUMNS WERE REMOVED FOR PHASE 2 WORK (TYP OF 2) - MATCH SURROUNDING CONCRETE FLATWORK
.132	LOW ENERGY DOOR ACTUATOR, SED FOR ASSOCIATED WORK
.140	PROVIDE 3" OF CLOSED-CELL SPRAY FOAM INSULATION AT UNDERSIDE OF ROOF SHEATHING AT LIMITS OF MECHANICAL UNIT CURB, TYP
.142	HSS COLUMNS CENTERED IN FRAMED WALL UNLESS DIMENSIONED OTHERWISE, TYP

ROOF MATERIAL LEGEND

07 41 15 MANUFACTURED STANDING SEAM ROOF, CLASS A, SEE **1/A-531**

07 54 25 THERMOPLASTIC POLYOLEFIN (TPO) ROOFING, CLASS A, SEE **17/A-531**

SOLAR PANEL FIELD, SED FOR ASSOCIATED WORK

WALL / PARTITION TAG LEGEND

FOR TYP EXTERIOR WALLS, SEE "WALL TYPES" SHT A-521
FOR TYP INTERIOR PARTITIONS, SEE "PARTITION TYPES" SHT A-521

WALL / PARTITION SYMBOL

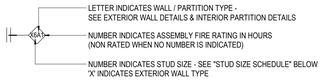

STUD SIZE SCHEDULE

INDICATOR	STUD DEPTH (NOMINAL)	
2	1.5"	(2X2)
3	2.5"	(2X3)
4	3.5"	(2X4)
6	5.5"	(2X6)
8	7.25	(2X8)
10	9.25	(2X10)
12	11.25	(2X12)

NOTES:

1. TYP INTERIOR PARTITION IS TYPE 6A, UON
2. STUDS ARE AT 16" OC, UON

AGENCY APPROVAL STAMP:

IDENTIFICATION STAMP
DIV. OF THE STATE ARCHITECT
APP: 01-120890 INC:
REVIEWED FOR
SS ☑ FLS ☑ ACS ☑
DATE: 10/25/2023

TLCDARCHITECTURE
520 Third St. #250
Santa Rosa, CA 95401
o: 707.525.5600
f: 707.525.5616
tlcd.com

CONSULTANT:

STAMP:

LICENSED ARCHITECT
CARL SERRANO
C-32357
REN:12/31/23
STATE OF CALIFORNIA

REVISIONS:

Number	Date	Description

NAPA VALLEY COLLEGE WINE EDUCATION CENTER

2277 NAPA VALLEJO HWY
NAPA, CA 94558

NAPA VALLEY COLLEGE

DSA APPLICATION NUMBER:
01-120890

TLCD PROJECT NUMBER:
21062.00

DATE:
04/12/2023

© THESE DRAWINGS ARE INSTRUMENTS OF SERVICE AND ARE THE SOLE PROPERTY OF TLCD ARCHITECTURE. ANY USE WITHOUT WRITTEN CONSENT IS PROHIBITED.

FLOOR PLAN, ROOF PLAN - PHASE 2

A-122

10/4/2023 7:54:38 AM

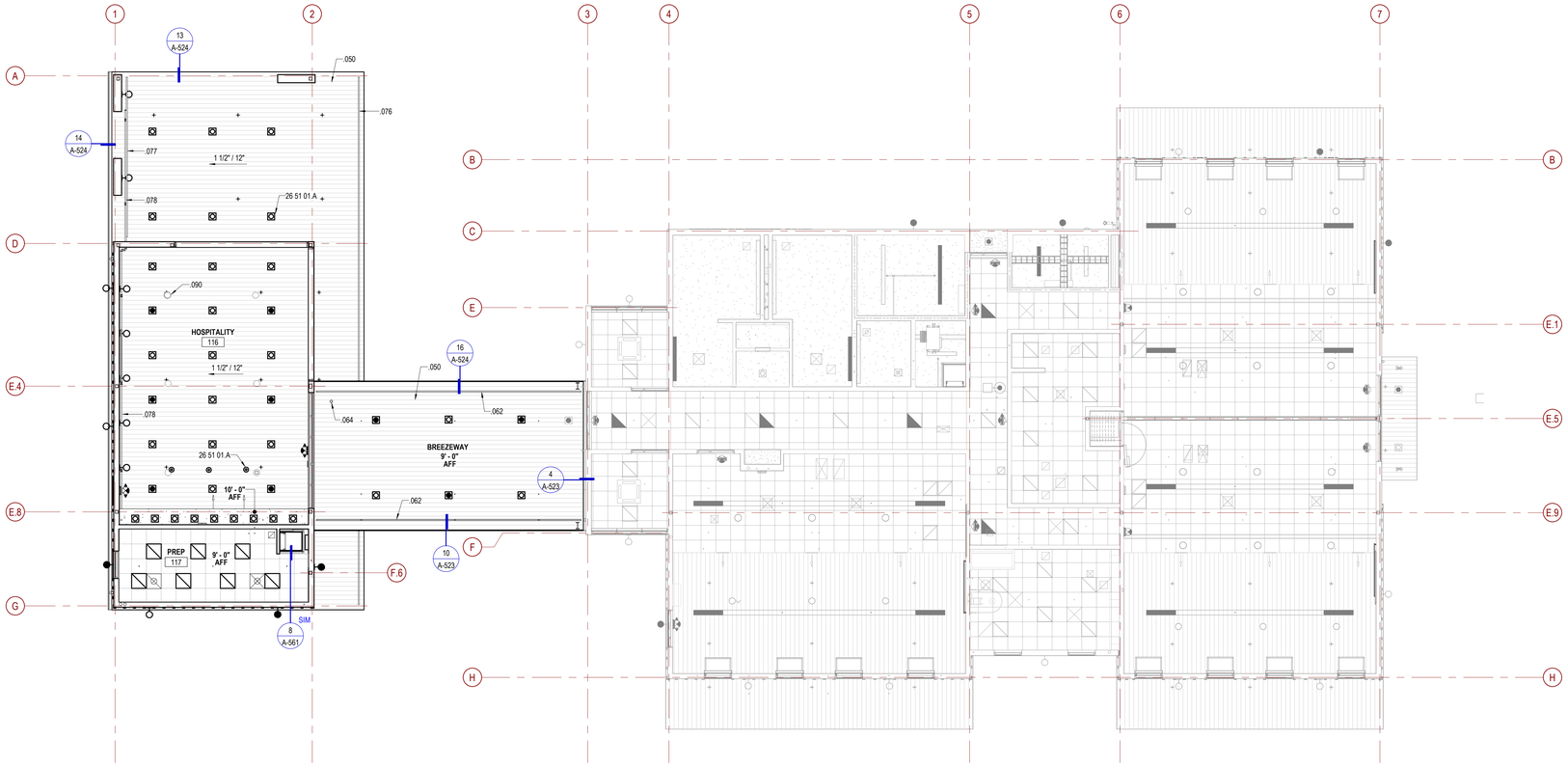

2 REFLECTED CEILING PLAN - PHASE 2

1/8" = 1'-0"

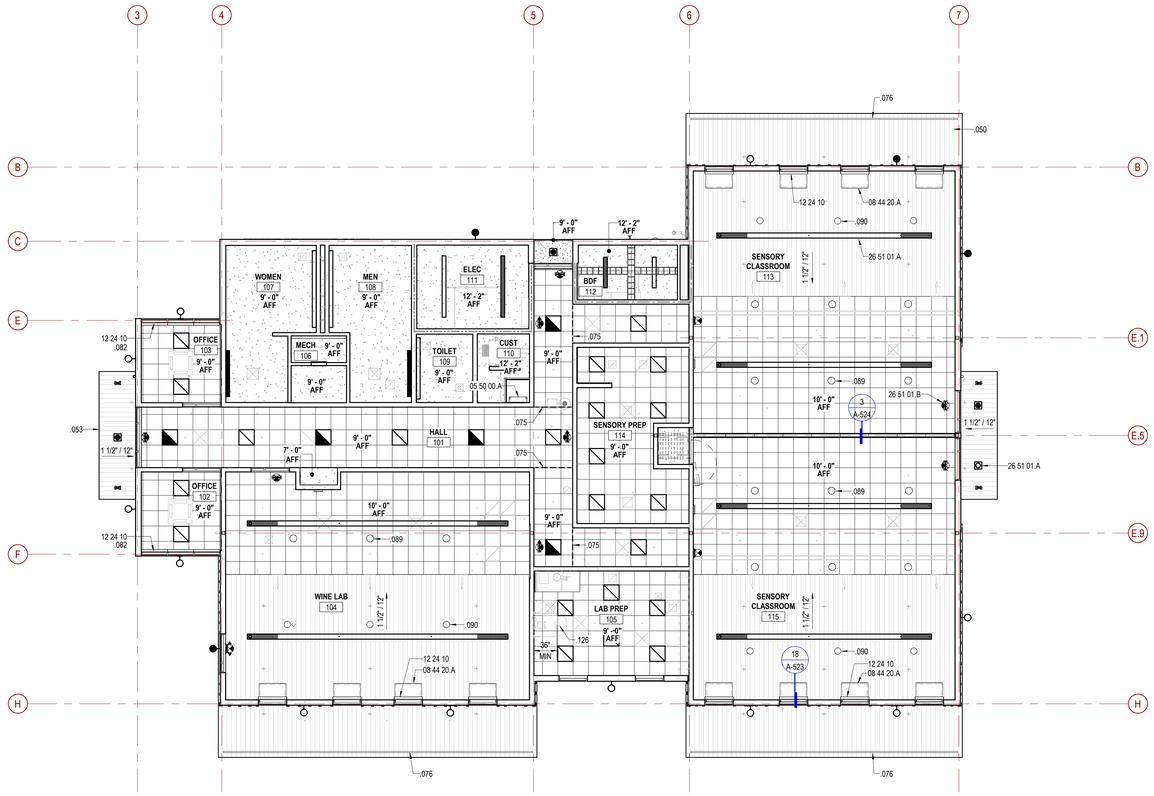

1 REFLECTED CEILING PLAN - PHASE 1

1/8" = 1'-0"

PROJECT NORTH
TRUE NORTH

REFERENCE KEYNOTE

05 50 00.A	METAL FABRICATIONS - LADDER
08 44 20.A	GLAZED ALUMINUM CURTAIN WALLS - SOLAR SHELF
12 24 10	ELECTRIC WINDOW SHADES
26 51 01.A	LIGHTING FIXTURE (TYP), SED
26 51 01.B	EMERGENCY LIGHTING - EXIT SIGN (TYP), SED

DRAWING NOTES

.050	5/8 X 8 S4S VERTICAL GRAIN DOUGLAS FIR SOFFIT / CEILING BOARDS OVER 1X4 FURRING @ 24" OC, TYP. ALIGN BOARD JOINT AT EXTERIOR AND INTERIOR. EXTERIOR TO BE FINISHED WITH CLEAR SATIN UV COATING, INTERIOR FINISHED WITH CLEAR SATIN POLYURETHANE COATING (SPRAY APPLIED)
.053	NOTE: THIS ENTRY CANOPY STRUCTURE TO BE REMOVED FOR PHASE 2 CONSTRUCTION.
.062	TRIM SOFFIT BOARDS FOR 2" WIDE CONTINUOUS SOFFIT VENT - HOLD VENT STRIPS BACK 4" AT ENDS
.064	OVERFLOW DRAIN DAYLIGHT AT SOFFIT. EXTEND 1" BEYOND SOFFIT BOARDS. PAINT TO MATCH SW 7069 IRON ORE
.075	EXPANSION JOINT AT SUSPENDED CEILING SYSTEM
.076	VENTILATION AT SOFFIT - SEE 1/A-522
.077	VENTILATION AT SOFFIT - SEE 1/A-522, SIM
.078	EXPOSED FIRE SPRINKLER LINES, HANGERS, ETC TO BE PAINTED WITH HIGH PERFORMANCE COATING TO MATCH SW 7069 IRON ORE
.082	PROVIDE POCKET AT CEILING FOR ROLLER SHADE FLUSH MOUNT WITH CEILING PLANE
.089	CEILING SPEAKER CENTERED ON CEILING TILE, SEE AV DWG'S
.090	SUSPENDED SPEAKER CENTERED ON WOOD BOARD JOINT, SEE AV DWG'S
.126	EMERGENCY SHOWER HEAD MIN 36" OFF OF WALL

REFLECTED CEILING PLAN LEGEND

NOTES:

1. FOR TYPICAL SUSP. CLG. SYSTEM REQUIREMENTS REFER TO SHT A-571 & A-572
2. NOT ALL SYMBOLS ARE INDICATED BELOW, REFER TO MECH., PLUMB. & ELECT. DRAWINGS FOR ADDITIONAL INFORMATION

- 09 24 00 - CEMENT PLASTER SYSTEM O/ FRAMING. UNIFORM LIGHT SAND FINISH - PAINT TO MATCH BOARD AND BATTEN
- 09 21 00 - GYP BD CEILING O/ FRAMING - PAINT
- 09 51 00 - 2 X 2 SUSPENDED ACOUSTICAL PANEL CEILING SYSTEM
- 06 20 00 - 5/8 X 8 S4S VERTICAL GRAIN DOUGLAS FIR SOFFIT / CEILING BOARDS OVER 1X4 FURRING @ 24" OC. EXTERIOR BOARDS TO HAVE SATIN CLEAR UV FINISH, INTERIOR BOARDS TO HAVE CLEAR SATIN POLYURETHANE FINISH
- RECESSED OR SURFACE MOUNTED LIGHT FIXTURE - SED
- RECESSED OR SURFACE MOUNTED LIGHT FIXTURE - SED
- RECESSED DOWNLIGHT - SED
- SUSPENDED OR SURFACE MOUNTED STRIP LIGHT - SED
- UNDER CABINET LIGHT FIXTURE - SED
- SUSPENDED PENDANT LIGHT FIXTURE - SED
- SUPPLY AIR REGISTER - SMD
- RETURN AIR REGISTER - SMD
- EXHAUST REGISTER - SMD
- CLG ACCESS DOOR (36" X 36", UON) SMD, SPD & SED FOR ADDITIONAL LOCATIONS

AGENCY APPROVAL STAMP:

IDENTIFICATION STAMP
DIV. OF THE STATE ARCHITECT
APP: 01-120890 INC:
REVIEWED FOR
SS ☑ FLS ☑ ACS ☑
DATE: 10/25/2023

TLCDARCHITECTURE
520 Third St. #250
Santa Rosa, CA 95401
o: 707.525.5600
f: 707.525.5616
tlcd.com

CONSULTANT:

STAMP:

LICENSED ARCHITECT
CARL SERTICH
C-32347
REN:12/31/23
STATE OF CALIFORNIA

REVISIONS:

Number	Date	Description

NAPA VALLEY COLLEGE WINE EDUCATION CENTER

2277 NAPA VALLEJO HWY
NAPA, CA 94558

NAPA VALLEY COLLEGE

DSA APPLICATION NUMBER:
01-120890

TLCD PROJECT NUMBER:
21062.00

DATE:
04/12/2023

REFLECTED CEILING PLANS

A-171

© THESE DRAWINGS ARE INSTRUMENTS OF SERVICE AND ARE THE SOLE PROPERTY OF TLCD ARCHITECTURE. ANY USE WITHOUT WRITTEN CONSENT IS PROHIBITED.

10/4/2023 7:54:44 AM

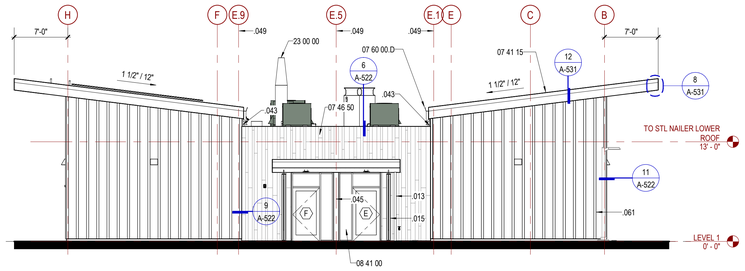

1 NORTH ELEVATION - PHASE 1

1/8" = 1'-0"

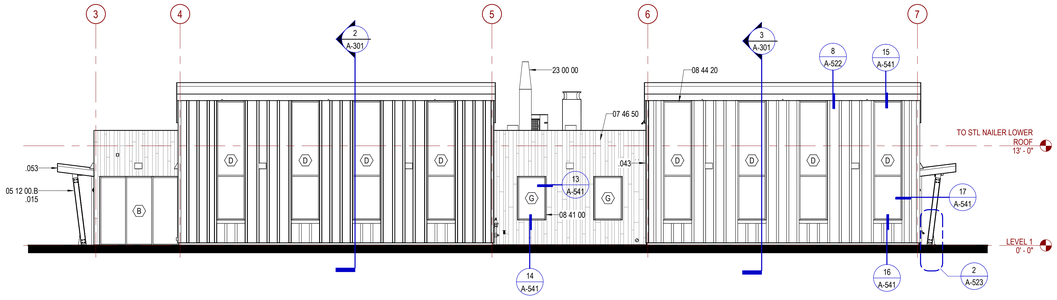

2 EAST ELEVATION - PHASE 1

1/8" = 1'-0"

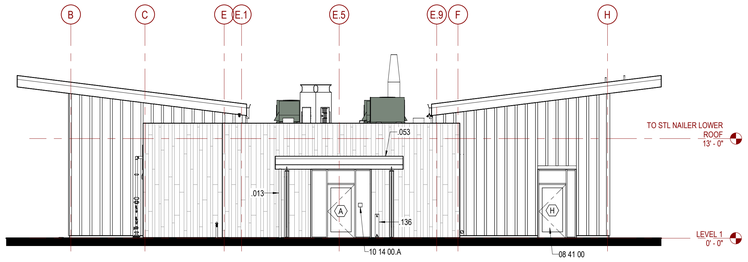

3 SOUTH ELEVATION - PHASE 1

1/8" = 1'-0"

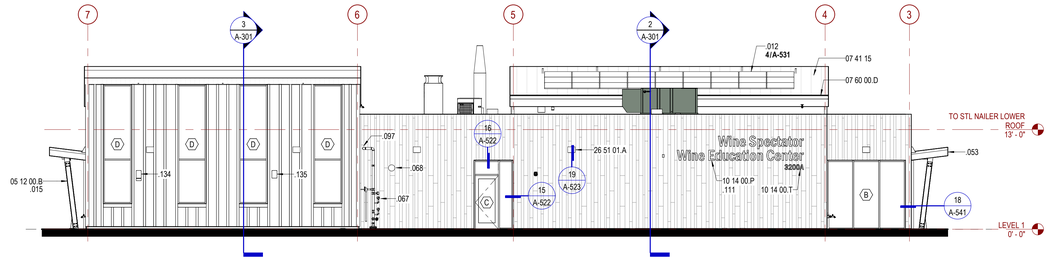

4 WEST ELEVATION - PHASE 1

1/8" = 1'-0"

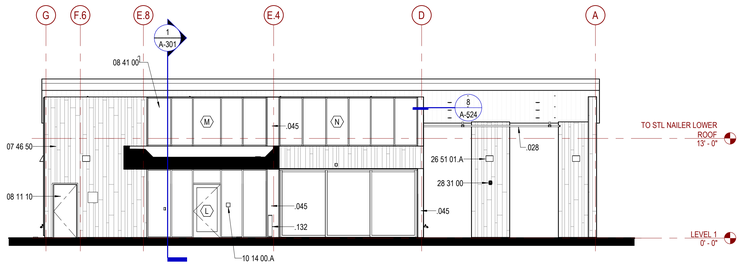

5 NORTH ELEVATION - PHASE 2

1/8" = 1'-0"

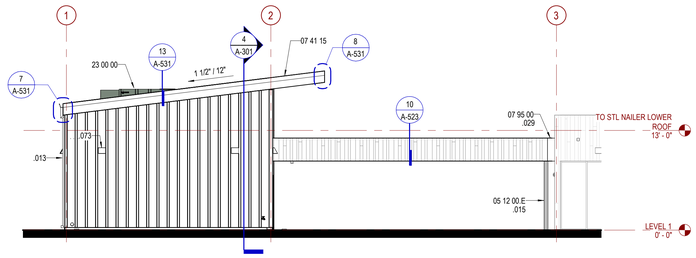

6 EAST ELEVATION - PHASE 2

1/8" = 1'-0"

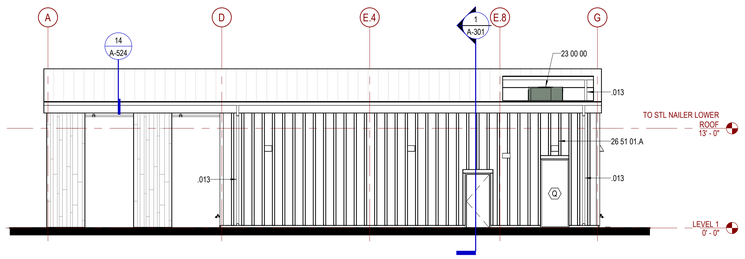

7 SOUTH ELEVATION - PHASE 2

1/8" = 1'-0"

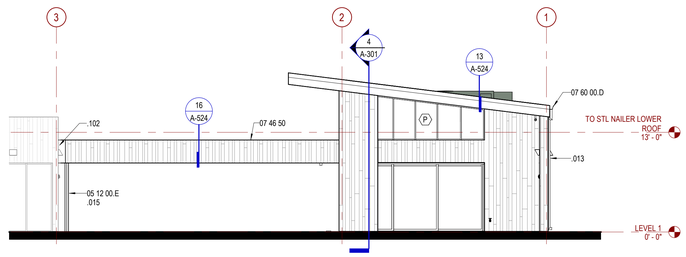

8 WEST ELEVATION - PHASE 2

1/8" = 1'-0"

REFERENCE KEYNOTE

05 12 00.B	STRUCTURAL STEEL FRAMING - CHANNEL SHAPE, SSD
05 12 00.E	STRUCTURAL STEEL FRAMING -WIDE FLANGE SHAPE, SSD
07 41 15	MANUFACTURED STANDING SEAM ROOFING
07 46 50	GFRC FACADE SYSTEM - REIDER OKO SKIN STRIPES
07 60 00.D	FLASHING AND SHEET METAL - GUTTERS & DOWNSPOUTS
07 95 00	EXPANSION JOINT COVER ASSEMBLIES
08 11 10	HOLLOW METAL DOORS AND FRAMES
08 41 00	ENTRANCES AND STOREFRONTS
08 44 20	GLAZED CURTAIN WALL SYSTEMS
10 14 00.A	SIGNAGE - ISA, SEE 20A/A-511
10 14 00.P	DIMENSIONAL LETTER SIGNAGE - 16"
10 14 00.T	DIMENSIONAL LETTER SIGNAGE - 8"
23 00 00	HEATING, VENTILATION AND AIR CONDITIONING (HVAC) EQUIPMENT, SMD
26 51 01.A	LIGHTING FIXTURE (TYP), SED
28 31 00	FIRE DETECTION AND ALARM, SFED

DRAWING NOTES

.012	SOLAR PANEL FIELD AREA (48 PANELS TOTAL), SED FOR ASSOCIATED WORK. "ACECLAMP" A2 NON-PENETRATING SOLAR MOUNTING CLAMPS WITH SOLAR-SNAP SOLAR RACKING SYSTEM. A2 CLAMP AT EACH ROOF SEAM (16" OC), SED FOR ADDITIONAL INFORMATION
.013	3" DIA SCHEDULE 40 GALVANIZED RWL. PAINT WITH HIGH PERFORMANCE COATING TO MATCH SURROUND, TYP
.015	ALL EXPOSED STRUCTURAL STEEL TO BE PAINTED WITH HIGH PERFORMANCE COATING, TYP
.028	ALL EXPOSED FIRE SPRINKLER LINES TO BE PAINTED WITH HIGH PERFORMANCE COATING - COLOR: SW 7069 IRON ORE AT WOOD CEILING, OTHERWISE MATCH SURROUND, TYP
.029	SEISMIC JOINT COVER - CUSTOM FACTORY FINISH TO MATCH OKO SKIN
.043	INSTALL BATTENS AT SIDE WALL - BOTTOM AT 4" BELOW TOP OF COPING
.045	16 GA ALUMINUM BRAKE METAL TRIM. FACTORY FINISH TO MATCH STOREFRONT / CURTAIN WALL, TYP
.049	GRID IS TO CENTERLINE OF STRUCTURAL STEEL (AND UPPER WALL WHERE OCCURS)
.053	NOTE: THIS ENTRY CANOPY STRUCTURE TO BE REMOVED FOR PHASE 2 CONSTRUCTION.
.061	5/4 X 4 BATTENS O/ 5/8" A/C REDWOOD ROUGH SAWN PLYWOOD PANELING
.067	FIRE SPRINKLER RISER, SEE FIRE PROTECTION DRAWINGS & SCD. PAINT WITH HIGH PERFORMANCE COATING, CUSTOM COLOR TO MATCH OKO SKIN
.068	FIRE ALARM BELL, SEE FIRE PROTECTION & FIRE ALARM DRAWINGS - PAINT TO MATCH SURROUND
.073	FIXTURES TO BE LOCATED EQUIDISTANT BETWEEN BATTENS, TYP AT BOARD AND BATTEN WALLS. WHEN BATTENS ARE SPACED CLOSER THAN 16" OC AND FIXTURE CANNOT FIT BETWEEN BATTENS, MOUNT PER DTL 20/A-523
.097	BACKER ROD AND SEALANT AT ALL PENETRATIONS THROUGH WALL, TYP BEFORE APPLICATION OF FLUID-APPLIED VAPOR BARRIER
.102	REMOVE, REPLACE AND CUT BACK RAINSCREEN PANELS AND FURRING AS REQUIRED AT REMOVED PHASE 1 ENTRY CANOPY AND WHERE PHASE 2 BREEZEWAY JOINS PHASE 1 BUILDING
.111	LED EDGE LIT LETTERS PAINTED CUSTOM COLOR TO MATCH SW 7069 IRON ORE, SED FOR ASSOCIATED WORK
.132	LOW ENERGY DOOR ACTUATOR, SED FOR ASSOCIATED WORK
.134	ADA PARKING SIGN MOUNTED ON BUILDING (VAN) - SEE SHT C-502. PROVIDE 1/4" STANDOFF(S) BEHIND SIGN AT ATTACHMENT POINT(S)
.135	ADA PARKING SIGN MOUNTED ON BUILDING - SEE SHT C-502. PROVIDE 1/4" STANDOFF(S) BEHIND SIGN AT ATTACHMENT POINT(S)
.136	LOW ENERGY DOOR ACTUATOR (VERTICAL ACTUATION BAR COMPLYING WITH CBC 11B-404.2.9, EXCEPTION C), SED FOR ASSOCIATED WORK. MOUNT ON RIGID INSULATION AND CUT CEMENT FIBER PLANKS & SUPPORTS 1/4" AWAY FROM DEVICE PERIMETER

EXTERIOR FINISH LEGEND

- 07 41 15 - MANUFACTURED STANDING SEAM ROOF, SEE **1/A-531**
- SOLAR PANEL FIELD, SED FOR ASSOCIATED WORK
- 07 46 50 - FIBER-CEMENT SIDING, SEE **1/A-521**
- 07 46 20 - 5/4 x 4 BATTENS w/ 5/8" A/C CEDAR ROUGH SAWN PLYWOOD PANELING, SEE **2/A-521**

AGENCY APPROVAL STAMP:

IDENTIFICATION STAMP
DIV. OF THE STATE ARCHITECT
APP: 01-120890 INC:
REVIEWED FOR
SS ☑ FLS ☑ ACS ☑
DATE: 10/25/2023

TLCDARCHITECTURE
520 Third St. #250
Santa Rosa, CA 95401
o: 707.525.5600
f: 707.525.5616
tlcd.com

CONSULTANT:

STAMP:

LICENSED ARCHITECT
CARL BERTHIA
C-32363
REN:12/31/23
STATE OF CALIFORNIA

REVISIONS:

Number	Date	Description

NAPA VALLEY COLLEGE WINE EDUCATION CENTER

2277 NAPA VALLEJO HWY
NAPA, CA 94558

NAPA VALLEY COLLEGE

DSA APPLICATION NUMBER:
01-120890

TLCD PROJECT NUMBER:
21062.00

DATE:
04/12/2023

EXTERIOR ELEVATIONS

A-201

© THESE DRAWINGS ARE INSTRUMENTS OF SERVICE AND ARE THE SOLE PROPERTY OF TLCD ARCHITECTURE. ANY USE WITHOUT WRITTEN CONSENT IS PROHIBITED

10/4/2023 7:54:51 AM

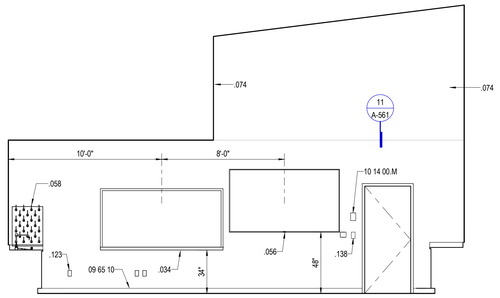

NOTE: SEE LAB DRAWINGS FOR CASEWORK, TYP AT WINE LAB

1A 108 WINE LAB - NORTH

1/4" = 1'-0"

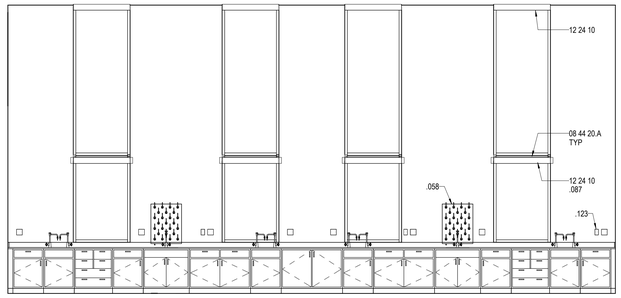

1B 108 WINE LAB - EAST

1/4" = 1'-0"

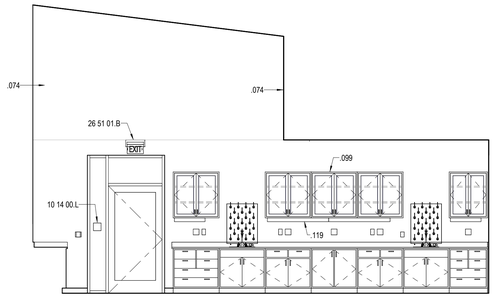

1C 104 WINE LAB - SOUTH

1/4" = 1'-0"

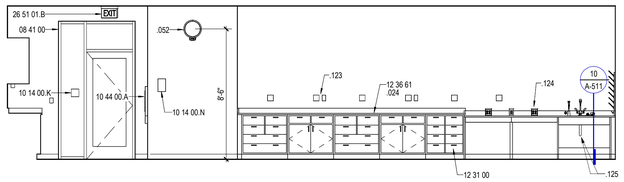

1D 108 WINE LAB - WEST

1/4" = 1'-0"

GENERAL INTERIOR ELEVATION NOTES

A. FOR TYPICAL MOUNTING HEIGHTS AND CLEARANCES AT FIXTURES AND TOILET ACCESSORIES, SEE **18/A-511**

B. FOR CLEARANCES AT DOORS, SEE **2/A-511**

C. FOR SIGNAGE AT DOORS, SEE **8/A-511**

D. FOR CLEARANCES AT LAVATORY, SEE **9/A-511**

E. THESE NOTES APPLY TO ALL INTERIOR ELEVATION SHEETS.

REFERENCE KEYNOTE

08 41 00	ENTRANCES AND STOREFRONTS
08 44 20.A	GLAZED ALUMINUM CURTAIN WALLS - SOLAR SHELF
09 30 00	TILING
09 65 10	RESILIENT BASE AND ACCESSORIES
10 14 00.K	SIGNAGE - EXIT ROUTE, SEE 20K/A-511
10 14 00.L	SIGNAGE - EXIT, SEE 20L/A-511
10 14 00.M	SIGNAGE - ROOM SIGNAGE, SEE 20M/A-511
10 14 00.N	SIGNAGE - ASSISTIVE LISTENING, SEE 20N/A-511
10 44 00.A	FIRE PROTECTION CABINET - SEMI-RECESSED
12 24 10	ELECTRIC WINDOW SHADES
12 31 00	MANUFACTURED LABORATORY CABINETS
12 36 61	SOLID SURFACING COUNTERTOPS - 1" EPOXY RESIN
22 00 00	PLUMBING FIXTURE, SPD
26 51 01.A	LIGHTING FIXTURE (TYP), SED
26 51 01.B	EMERGENCY LIGHTING - EXIT SIGN (TYP), SED
28 31 00	FIRE DETECTION AND ALARM, SFED

DRAWING NOTES

.022	ACCESSIBLE EMERGENCY EYE WASH AND SHOWER, SPD & SEE LAB DWG'S
.024	EPOXY RESIN COUNTERTOP WITH 3/4" EPOXY RESIN SIDE / BACKSPLASH
.034	4' X 8' DRY ERASE WHITEBOARD WITH TRAY
.041	UNDERCOUNTER WINE COOLER TO FIT UNDER ADA COUNTER HEIGHT, SED FOR ASSOCIATED WORK
.042	UNDER COUNTER COMMERCIAL GRADE GLASSWARE WASHER, CFCI. MIELE PROFESSIONAL PG 8061 LI, 208V, STAINLESS STEEL FINISH WITH GLASSWARE BASKETS. CONFIRM ACCESSORIES WITH COLLEGE REPRESENTATIVE. SUBMIT PRODUCT INFORMATION FOR APPROVAL PRIOR TO PURCHASE. SED & SPD FOR ASSOCIATED WORK
.052	CLOCK TO MATCH CAMPUS STANDARD, SED
.056	98" FLAT PANEL DISPLAY, SEE AV DRAWINGS & SED. MAX 4" PROJECTION FROM WALL
.057	ACCESSIBLE FUME HOOD, SPD, SMD, SED & SEE LAB DWG'S FOR ASSOCIATED WORK. PROVIDE FRAMED GYP BD BULKHEAD TWO SIDES IF UNIT DOES NOT HAVE CLOSURE PANELS TO CEILING. SEE DTL 3/LF-502
.058	PEG DRYING RACK, TYP
.074	ACOUSTICAL WALL PANEL (WP-1) AT +10'-0" TO SLOPED CEILING THIS WALL
.085	CABINET END PANEL WITHOUT TOE KICK - TYP AT ALL CONDITIONS WHERE CABINET IS NOT AGAINST A WALL
.087	LOW VOLTAGE WIRING FOR ROLLER SHADE AT SOLAR SHELF TO BE CONCEALED - ROUTE THROUGH WALL AND CURTAIN WALL FRAMING
.099	UPPER CABINET COLOR TO BE WHITE OR OFF-WHITE
.119	CENTER UNDER CABINET LIGHT FIXTURES ON CABINET, TYP
.123	ELECTRICAL SWITCHES, POWER OUTLETS, DATA OUTLETS, TYP. SED
.124	POWER/DATA TOWER AT ACCESSIBLE WORK AREA, TYP
.125	PROVIDE PIPE INSULATION AT ACCESSIBLE SINK,TYP
.126	EMERGENCY SHOWER HEAD MIN 36" OFF OF WALL
.128	SERVICE FAUCET WITH ADA COMPATIBLE SPRAY HOSE ATTACHMENT AND SPRAY NOZZLE WALL HANGER @ +36"
.138	WINDOW ROLLER SHADES CONTROL SWITCH @ +48", SED FOR ASSOCIATED WORK
.139	OPEN SPACE UNDER COUNTERTOP FOR EQUIPMENT - SEE LAB DRAWINGS

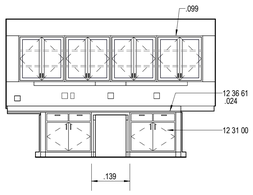

NOTE: SEE LAB DRAWINGS FOR CASEWORK, TYP AT LAB PREP

2A 109 LAB PREP - NORTH

1/4" = 1'-0"

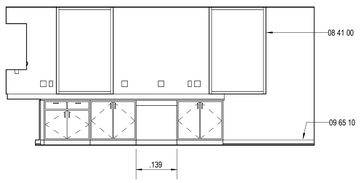

2B 109 LAB PREP - EAST

1/4" = 1'-0"

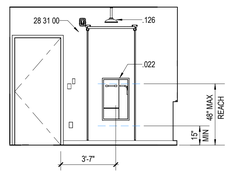

2C 109 LAB PREP - SOUTH

1/4" = 1'-0"

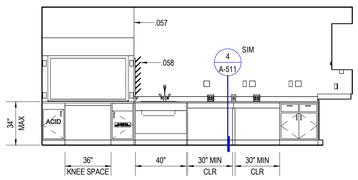

2D 109 LAB PREP - WEST

1/4" = 1'-0"

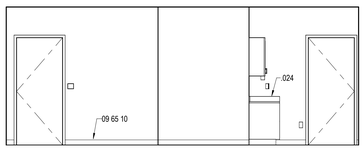

3A 114 SENSORY PREP - NORTH

1/4" = 1'-0"

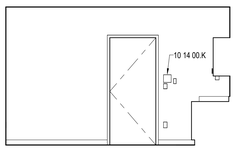

3B 114 SENSORY PREP - EAST

1/4" = 1'-0"

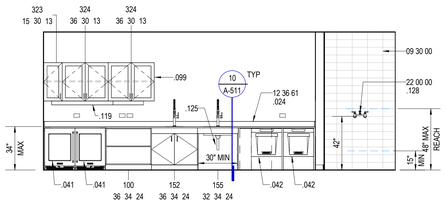

3C 114 SENSORY PREP - SOUTH

1/4" = 1'-0"

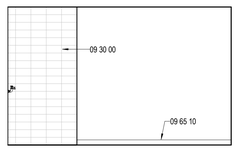

3D 114 SENSORY PREP - WEST

1/4" = 1'-0"

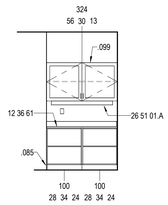

3E 119 - SENSORY PREP

1/4" = 1'-0"

AGENCY APPROVAL STAMP:

IDENTIFICATION STAMP
DIV. OF THE STATE ARCHITECT
APP: 01-120890 INC:
REVIEWED FOR
SS ☑ FLS ☑ ACS ☑
DATE: 10/25/2023

TLCDARCHITECTURE
520 Third St. #250
Santa Rosa, CA 95401
o: 707.525.5600
f: 707.525.5616
tlcd.com

CONSULTANT:

STAMP:

LICENSED ARCHITECT
CARL SERTAIN
C-32347
REN:12/31/23
STATE OF CALIFORNIA

REVISIONS:

Number	Date	Description

NAPA VALLEY COLLEGE WINE EDUCATION CENTER

2277 NAPA VALLEJO HWY
NAPA, CA 94558

NAPA VALLEY COLLEGE

DSA APPLICATION NUMBER:
01-120890

TLCD PROJECT NUMBER:
21062.00

DATE:
04/12/2023

INTERIOR ELEVATIONS - PHASE 1

A-251

© THESE DRAWINGS ARE INSTRUMENTS OF SERVICE AND ARE THE SOLE PROPERTY OF TLCD ARCHITECTURE. ANY USE WITHOUT WRITTEN CONSENT IS PROHIBITED.

10/4/2023 7:54:56 AM

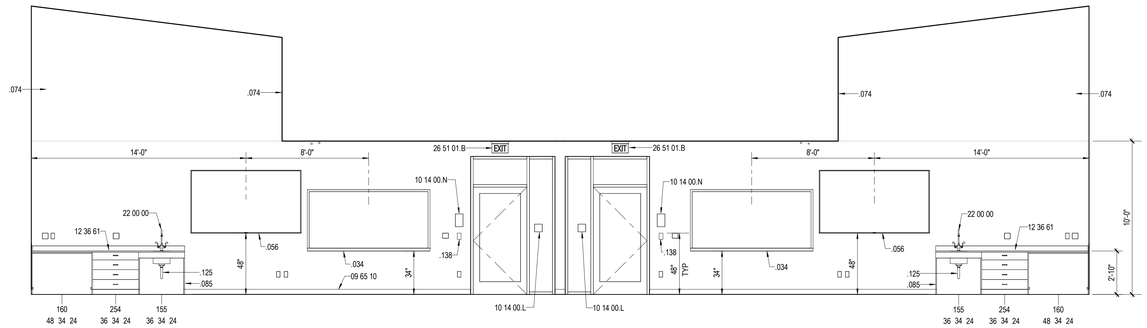

4A 113 & 115 SENSORY CLASSROOM(S) - NORTH (FOLDING PARTITION OPEN)

1/4" = 1'-0"

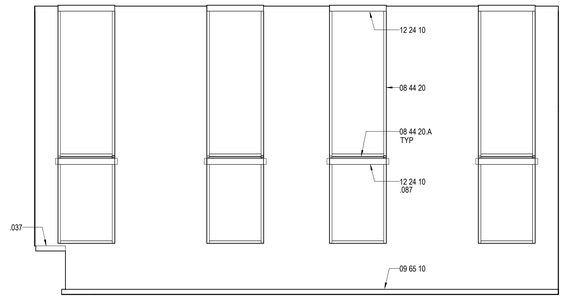

4B 115 SENSORY CLASSROOM - EAST

1/4" = 1'-0"

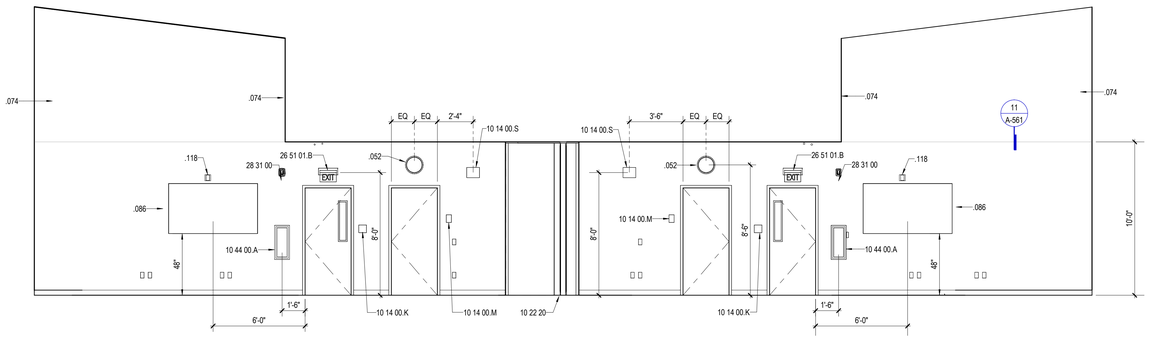

4C 113 & 115 SENSORY CLASSROOM(S) - SOUTH (FOLDING PARTITION OPEN)

1/4" = 1'-0"

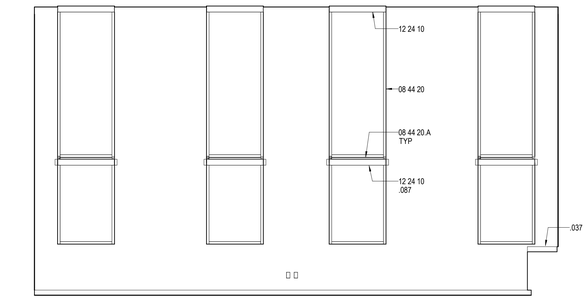

4D 113 SENSORY CLASSROOM - WEST

1/4" = 1'-0"

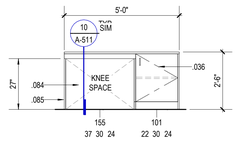

5C DESK AT SENSORY CLASSROOMS

3/8" = 1'-0"

REFERENCE KEYNOTE

08 44 20	GLAZED CURTAIN WALL SYSTEMS
08 44 20.A	GLAZED ALUMINUM CURTAIN WALLS - SOLAR SHELF
09 65 10	RESILIENT BASE AND ACCESSORIES
10 14 00.K	SIGNAGE - EXIT ROUTE, SEE 20K/A-511
10 14 00.L	SIGNAGE - EXIT, SEE 20L/A-511
10 14 00.M	SIGNAGE - ROOM SIGNAGE, SEE 20M/A-511
10 14 00.N	SIGNAGE - ASSISTIVE LISTENING, SEE 20N/A-511
10 14 00.S	SIGNAGE - MAXIMUM OCCUPANCY 77 (154 WHEN PARTITION IS OPEN)
10 22 20	OPERABLE PARTITIONS
10 44 00.A	FIRE PROTECTION CABINET - SEMI-RECESSED
12 24 10	ELECTRIC WINDOW SHADES
12 36 61	SOLID SURFACING COUNTERTOPS - 1" EPOXY RESIN
22 00 00	PLUMBING FIXTURE, SPD
26 51 01.B	EMERGENCY LIGHTING - EXIT SIGN (TYP), SED
28 31 00	FIRE DETECTION AND ALARM, SFED

DRAWING NOTES

.034	4' X 8' DRY ERASE WHITEBOARD WITH TRAY
.036	CABINET FOR A/V RACK AND EQUIPMENT, SED & SEE AV DWG'S
.037	3/4" THICK EPOXY RESIN SPLASH WITH MATCHING SIDE WALL RETURNS TO MATCH COUNTERTOP
.052	CLOCK TO MATCH CAMPUS STANDARD, SED
.056	98" FLAT PANEL DISPLAY, SEE AV DRAWINGS & SED. MAX 4" PROJECTION FROM WALL
.074	ACOUSTICAL WALL PANEL (WP-1) AT +10'-0" TO SLOPED CEILING THIS WALL
.084	PRIVACY BACK PANEL
.085	CABINET END PANEL WITHOUT TOE KICK - TYP AT ALL CONDITIONS WHERE CABINET IS NOT AGAINST A WALL
.086	80" FLAT PANEL DISPLAY, SED & SEE AV DWG'S
.087	LOW VOLTAGE WIRING FOR ROLLER SHADE AT SOLAR SHELF TO BE CONCEALED - ROUTE THROUGH WALL AND CURTAIN WALL FRAMING
.118	CAMERA FOR DISTANCE LEARNING CENTERED ABOVE FLAT PANEL DISPLAY, SEE AV DRAWINGS
.125	PROVIDE PIPE INSULATION AT ACCESSIBLE SINK,TYP
.138	WINDOW ROLLER SHADES CONTROL SWITCH @ +48", SED FOR ASSOCIATED WORK

AGENCY APPROVAL STAMP:

IDENTIFICATION STAMP
DIV. OF THE STATE ARCHITECT
APP: 01-120890 INC:
REVIEWED FOR
SS ☑ FLS ☑ ACS ☑
DATE: 10/25/2023

TLCDARCHITECTURE
520 Third St. #250
Santa Rosa, CA 95401
o: 707.525.5600
f: 707.525.5616
tlcd.com

CONSULTANT:

STAMP:

LICENSED ARCHITECT
CARL SERTSEK
C-32343
REN:12/31/23
STATE OF CALIFORNIA

REVISIONS:

Number	Date	Description

NAPA VALLEY COLLEGE WINE EDUCATION CENTER

2277 NAPA VALLEJO HWY
NAPA, CA 94558

NAPA VALLEY COLLEGE

DSA APPLICATION NUMBER:
01-120890

TLCD PROJECT NUMBER:
21062.00

DATE:
04/12/2023

INTERIOR ELEVATIONS - PHASE 1

A-252

© THESE DRAWINGS ARE INSTRUMENTS OF SERVICE AND ARE THE SOLE PROPERTY OF TLCD ARCHITECTURE. ANY USE WITHOUT WRITTEN CONSENT IS PROHIBITED.

10/4/2023 7:54:59 AM

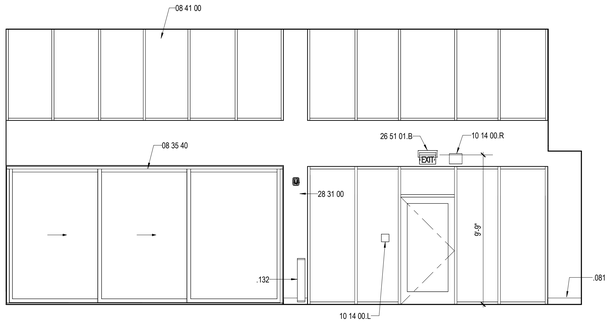

6A 116 HOSPITALITY - NORTH

1/4" = 1'-0"

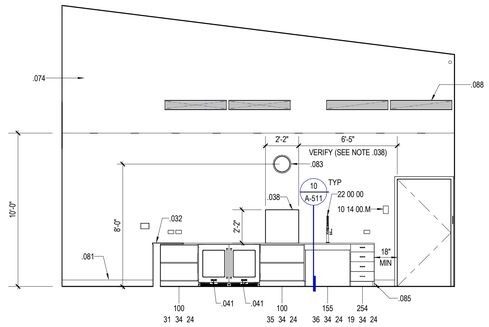

6B 116 HOSPITALITY - EAST

1/4" = 1'-0"

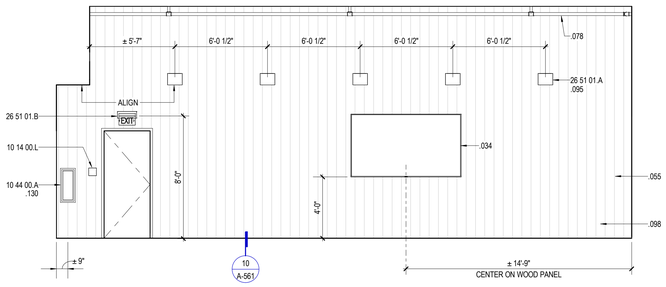

6C 116 HOSPITALITY - SOUTH

1/4" = 1'-0"

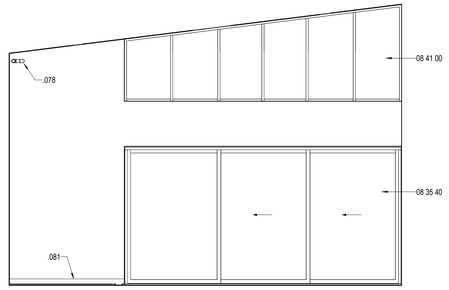

6D 116 HOSPITALITY - WEST

1/4" = 1'-0"

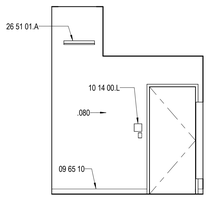

7A 117 PREP - NORTH

1/4" = 1'-0"

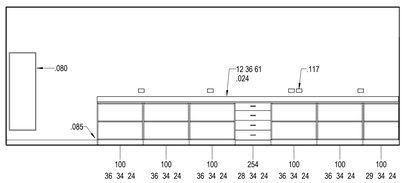

7B 117 PREP - EAST

1/4" = 1'-0"

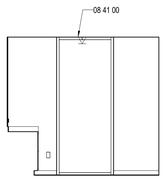

7C 117 PREP - SOUTH

1/4" = 1'-0"

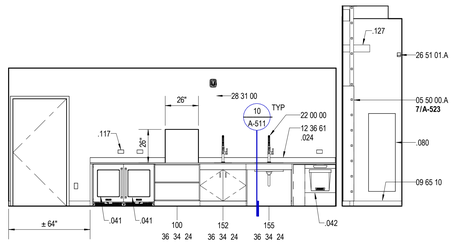

7D 117 PREP - WEST

1/4" = 1'-0"

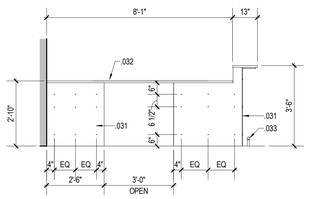

8A 116 HOSPITALITY BAR - NORTH

3/8" = 1'-0"

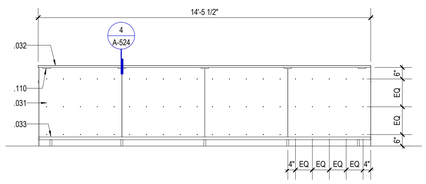

8B 116 HOSPITALITY BAR - EAST

3/8" = 1'-0"

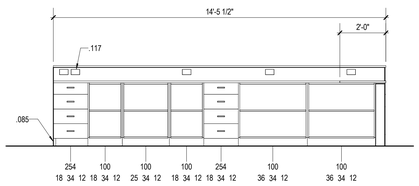

8C 116 HOSPITALITY BACK BAR - WEST

3/8" = 1'-0"

REFERENCE KEYNOTE

05 50 00.A	METAL FABRICATIONS - LADDER
08 35 40	SLIDING ALUMINUM AND GLASS WALLS
08 41 00	ENTRANCES AND STOREFRONTS
09 65 10	RESILIENT BASE AND ACCESSORIES
10 14 00.L	SIGNAGE - EXIT, SEE 20L/A-511
10 14 00.M	SIGNAGE - ROOM SIGNAGE, SEE 20M/A-511
10 14 00.R	SIGNAGE - MAXIMUM OCCUPANCY 181
10 44 00.A	FIRE PROTECTION CABINET - SEMI-RECESSED
12 36 61	SOLID SURFACING COUNTERTOPS - 1" EPOXY RESIN
22 00 00	PLUMBING FIXTURE, SPD
26 51 01.A	LIGHTING FIXTURE (TYP), SED
26 51 01.B	EMERGENCY LIGHTING - EXIT SIGN (TYP), SED
28 31 00	FIRE DETECTION AND ALARM, SFED

DRAWING NOTES

.024	EPOXY RESIN COUNTERTOP WITH 3/4" EPOXY RESIN SIDE / BACKSPLASH
.031	1/4" BLACKENED STEEL PLATE PANELS WITH BLACK PAN HEAD FASTENERS
.032	RICHLITE STRATUM 1" THICK COUNTERTOP - BAMBOO BLACK DIAMOND LEATHERED FINISH
.033	CUSTOM FABRICATED BLACKENED STEEL FOOT RAIL WITH POST EPOXY SET INTO CONCRETE FLOOR
.034	4' X 8' DRY ERASE WHITEBOARD WITH TRAY
.038	CABINET DOOR PANEL WITH VERTICAL SLIDING DOOR HARDWARE. CUSTOM COLOR DOOR PANEL TO MATCH WALL. CENTER OPENING ON CABINET BELOW
.041	UNDERCOUNTER WINE COOLER TO FIT UNDER ADA COUNTER HEIGHT, SED FOR ASSOCIATED WORK
.042	UNDER COUNTER COMMERCIAL GRADE GLASSWARE WASHER, CFCI. MIELE PROFESSIONAL PG 8061 U, 208V, STAINLESS STEEL FINISH WITH GLASSWARE BASKETS. CONFIRM ACCESSORIES WITH COLLEGE REPRESENTATIVE. SUBMIT PRODUCT INFORMATION FOR APPROVAL PRIOR TO PURCHASE. SED & SPD FOR ASSOCIATED WORK
.055	5/8 X 8 S4S VERTICAL GRAIN DOUGLAS FIR BOARDS OVER 5/8" PLYWD SHTHG - ALIGN JOINTS WITH CEILING BOARDS. FINISH WITH CLEAR SATIN POLYURETHANE COATING (SPRAY APPLIED)
.074	ACOUSTICAL WALL PANEL (WP-1) AT +10'-0" TO SLOPED CEILING THIS WALL
.078	EXPOSED FIRE SPRINKLER LINES, HANGERS, ETC TO BE PAINTED WITH HIGH PERFORMANCE COATING TO MATCH SW 7069 IRON ORE
.080	ELECTRICAL PANEL, SED
.081	5" X 1/2" WOOD BASE - PAINT TO MATCH WALL, SATIN FINISH
.083	CLOCK TO MATCH CAMPUS STANDARD, SED. CENTER ON OPENING BELOW
.085	CABINET END PANEL WITHOUT TOE KICK - TYP AT ALL CONDITIONS WHERE CABINET IS NOT AGAINST A WALL
.088	MECHANICAL REGISTER - SMD, TYP
.095	LIGHT FIXTURES CENTERED ON WOOD PANEL, TYP
.098	OUTLETS, SWITCHES FACEPLATES, ETC AT WOOD WALL TO BE BLACK FINISH. ALL OTHER LOCATIONS WHITE
.110	COUNTERTOP SUPPORT BRACKET, TYP OF (5), CENTER AT PANEL JOINT EXCEPT AT ENDS CENTER ON SCREW LINE BELOW
.117	ELECTRICAL AND/OR DATA OUTLETS, SED
.127	WRAP EXPOSED DIMENSIONAL WOOD LEDGER IN GYP BD AND PAINT TO MATCH SURROUND
.130	CENTER CABINET ON WOOD PANELING JOINT
.132	LOW ENERGY DOOR ACTUATOR, SED FOR ASSOCIATED WORK

AGENCY APPROVAL STAMP:

IDENTIFICATION STAMP
DIV. OF THE STATE ARCHITECT
APP: 01-120890 INC:
REVIEWED FOR
SS ☑ FLS ☑ ACS ☑
DATE: 10/25/2023

TLCDARCHITECTURE
520 Third St. #250
Santa Rosa, CA 95401
o: 707.525.5600
f: 707.525.5616
tlcd.com

CONSULTANT:

STAMP:

LICENSED ARCHITECT
CARL SERTICH
C-32347
REN:12/31/23
STATE OF CALIFORNIA

REVISIONS:

Number	Date	Description

NAPA VALLEY COLLEGE WINE EDUCATION CENTER

2277 NAPA VALLEJO HWY
NAPA, CA 94558

NAPA VALLEY COLLEGE

DSA APPLICATION NUMBER:
01-120890

TLCD PROJECT NUMBER:
21062.00

DATE:
04/12/2023

INTERIOR ELEVATIONS - PHASE 2

A-253

© THESE DRAWINGS ARE INSTRUMENTS OF SERVICE AND ARE THE SOLE PROPERTY OF TLCD ARCHITECTURE. ANY USE WITHOUT WRITTEN CONSENT IS PROHIBITED.

10/4/2023 7:56:03 AM

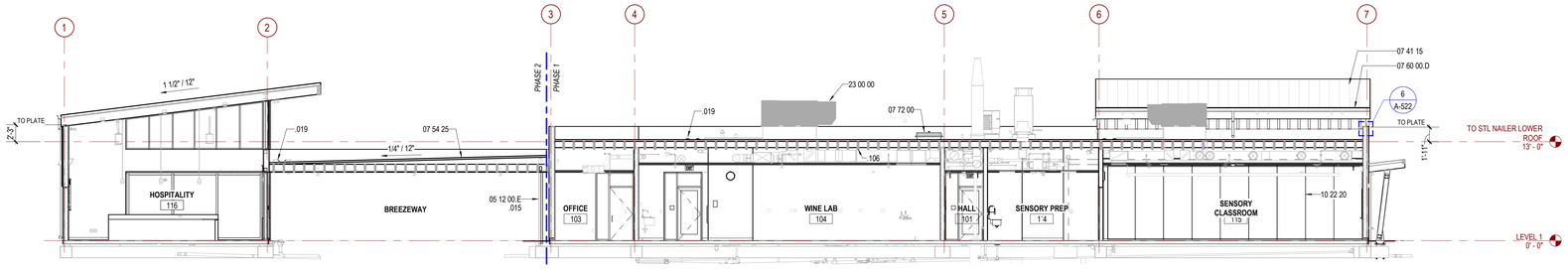

1 SECTION A

1/8" = 1'-0"

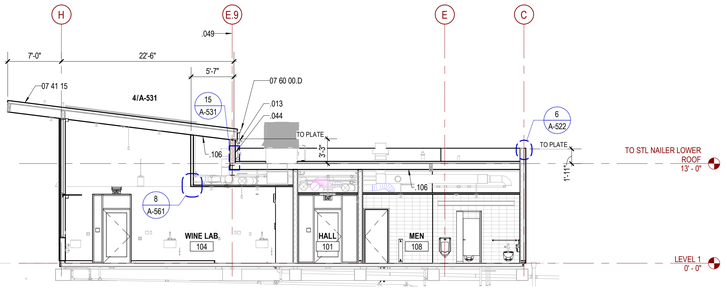

2 SECTION C

1/8" = 1'-0"

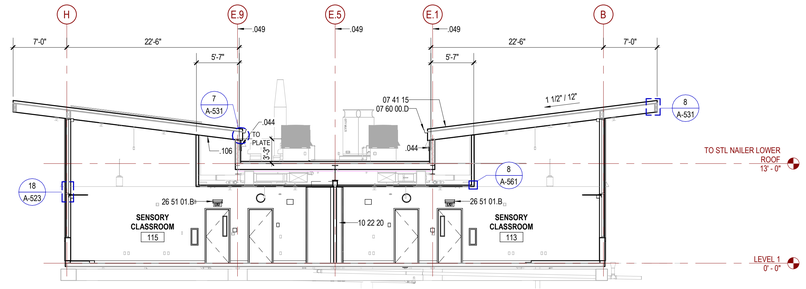

3 SECTION B

1/8" = 1'-0"

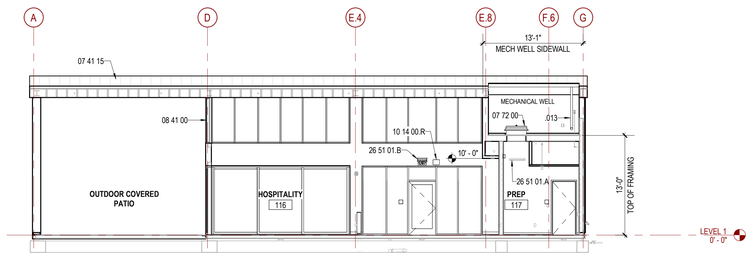

4 SECTION D

1/8" = 1'-0"

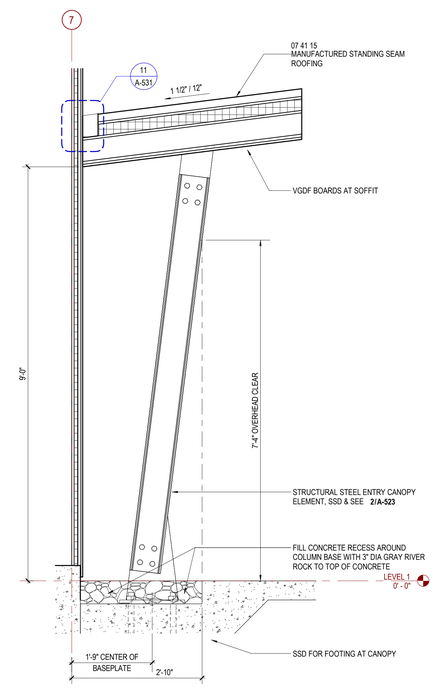

5 WALL SECTION AT ENTRY CANOPY

3/4" = 1'-0"

REFERENCE KEYNOTE

05 12 00.E	STRUCTURAL STEEL FRAMING -WIDE FLANGE SHAPE, SSD
07 41 15	MANUFACTURED STANDING SEAM ROOFING
07 54 25	THERMOPLASTIC POLYOLEFIN (TPO) ROOFING - SELF-ADHERED
07 60 00.D	FLASHING AND SHEET METAL - GUTTERS & DOWNSPOUTS
07 72 00	ROOF HATCHES
08 41 00	ENTRANCES AND STOREFRONTS
10 14 00.R	SIGNAGE - MAXIMUM OCCUPANCY 181
10 22 20	OPERABLE PARTITIONS
23 00 00	HEATING, VENTILATION AND AIR CONDITIONING (HVAC) EQUIPMENT, SMD
26 51 01.A	LIGHTING FIXTURE (TYP), SED
26 51 01.B	EMERGENCY LIGHTING - EXIT SIGN (TYP), SED

DRAWING NOTES

.013	3" DIA SCHEDULE 40 GALVANIZED RWL. PAINT WITH HIGH PERFORMANCE COATING TO MATCH SURROUND, TYP
.015	ALL EXPOSED STRUCTURAL STEEL TO BE PAINTED WITH HIGH PERFORMANCE COATING, TYP
.019	ROOF DRAIN / OVERFLOW DRAIN, SPD
.044	INSTALL BATTENS AT BACK WALL - BOTTOM AT 4" BELOW TOP OF COPING
.049	GRID IS TO CENTERLINE OF STRUCTURAL STEEL (AND UPPER WALL WHERE OCCURS)
.106	PROVIDE BATT INSULATION WITH FACING MEETING NONCOMBUSTIBLE OR LIMITED-COMBUSTIBLE CRITERIA STAPLED TO AND COVERING THE BOTTOM FACE OF RAFTERS/JOISTS, TYPICAL AT SUSPENDED CEILING AREAS WHICH CREATE AN ENCLOSED SPACE

AGENCY APPROVAL STAMP:

IDENTIFICATION STAMP
DIV. OF THE STATE ARCHITECT
APP: 01-120890 INC:
REVIEWED FOR
SS ☑ FLS ☑ ACS ☑
DATE: 10/25/2023

TLCDARCHITECTURE
520 Third St. #250
Santa Rosa, CA 95401
o: 707.525.5600
f: 707.525.5616
tlcd.com

CONSULTANT:

STAMP:

LICENSED ARCHITECT
CARL SERTICH
C-32343
REN:12/31/23
STATE OF CALIFORNIA

REVISIONS:

Number	Date	Description

NAPA VALLEY COLLEGE WINE EDUCATION CENTER

2277 NAPA VALLEJO HWY
NAPA, CA 94558

NAPA VALLEY COLLEGE

DSA APPLICATION NUMBER:
01-120890

TLCD PROJECT NUMBER:
21062.00

DATE:
04/12/2023

BUILDING & WALL SECTIONS

A-301

© THESE DRAWINGS ARE INSTRUMENTS OF SERVICE AND ARE THE SOLE PROPERTY OF TLCD ARCHITECTURE. ANY USE WITHOUT WRITTEN CONSENT IS PROHIBITED.

10/4/2023 7:55:08 AM

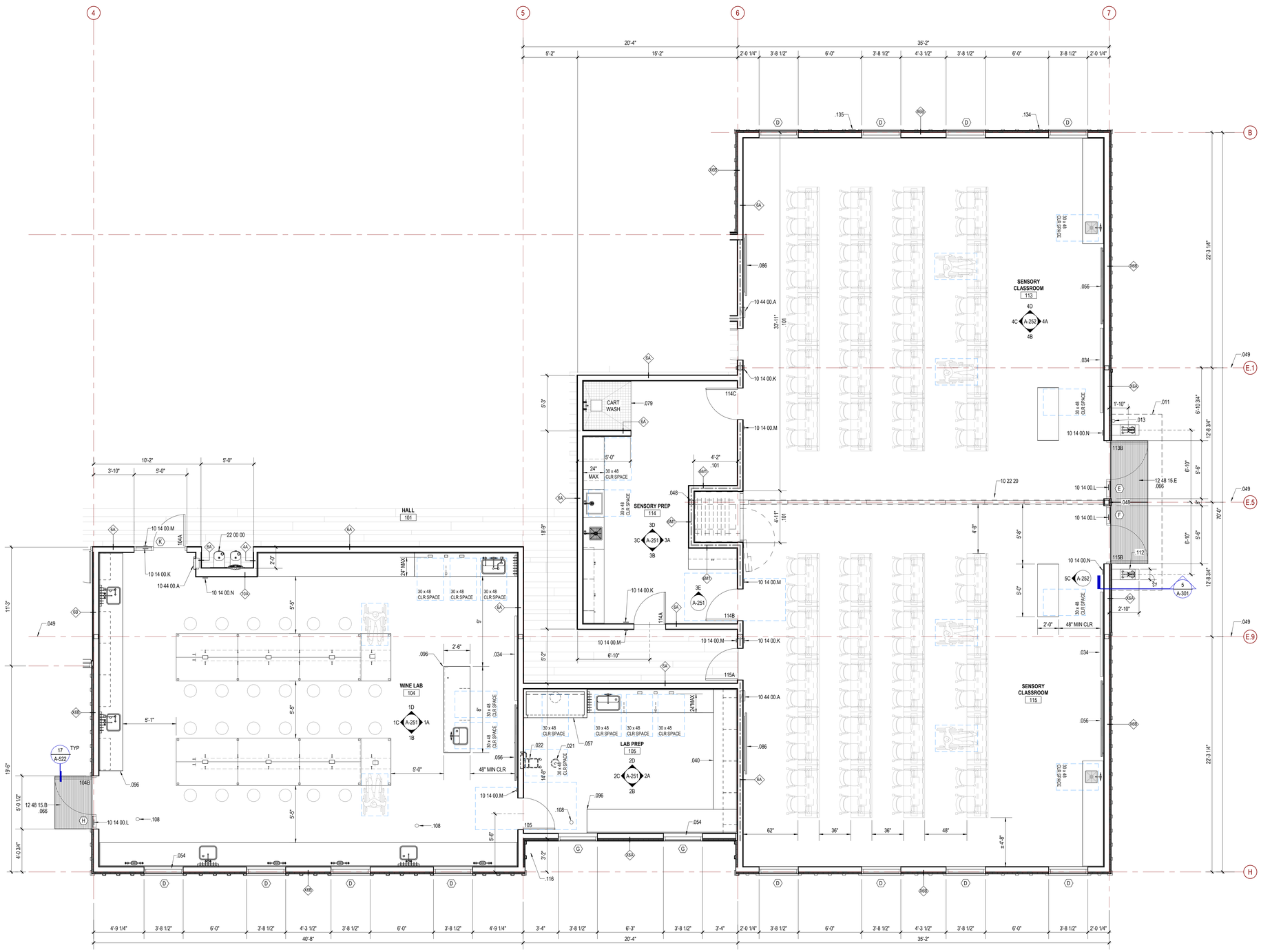

1 **ENLARGED FLOOR PLAN - WINE LAB & SENSORY CLASSROOMS**

1/4" = 1'-0"

REFERENCE KEYNOTE

10 14 00.K	SIGNAGE - EXIT ROUTE, SEE 20K/A-511
10 14 00.L	SIGNAGE - EXIT, SEE 20L/A-511
10 14 00.M	SIGNAGE - ROOM SIGNAGE, SEE 20M/A-511
10 14 00.N	SIGNAGE - ASSISTIVE LISTENING, SEE 20N/A-511
10 22 20	OPERABLE PARTITIONS
10 44 00.A	FIRE PROTECTION CABINET - SEMI-RECESSED
12 48 15.B	RECESSED ENTRY GRILLES - 42" X 60"
12 48 15.E	RECESSED ENTRY GRILLES - 42" X 140"
22 00 00	PLUMBING FIXTURE, SPD

DRAWING NOTES

.011	ROOF OVERHANG, TYP
.013	3" DIA SCHEDULE 40 GALVANIZED RWL. PAINT WITH HIGH PERFORMANCE COATING TO MATCH SURROUND, TYP
.021	FLOOR DRAIN, SPD. SLOPE FLOOR TO DRAIN, 2% MAX SLOPE, TYP
.022	ACCESSIBLE EMERGENCY EYE WASH AND SHOWER, SPD & SEE LAB DWG'S
.034	4' X 8' DRY ERASE WHITEBOARD WITH TRAY
.040	UNDERCOUNTER REFRIGERATOR (34" COUNTER HEIGHT), CFCI, SED & SEE LAB DWG'S
.048	STRUCTURAL STEEL COLUMN - ALIGN WITH CENTER OF STUD FRAMED WALL AND GRID, SSD
.049	GRID IS TO CENTERLINE OF STRUCTURAL STEEL (AND UPPER WALL WHERE OCCURS)
.054	3/4" EPOXY RESIN SILL TO MATCH EPOXY RESIN COUNTERTOP, TYP AT WINE LAB & LAB PREP CURTAIN WALL / STOREFRONT
.056	98" FLAT PANEL DISPLAY, SEE AV DRAWINGS & SED. MAX 4" PROJECTION FROM WALL
.057	ACCESSIBLE FUME HOOD, SPD, SMD, SED & SEE LAB DWG'S FOR ASSOCIATED WORK. PROVIDE FRAMED GYP BD BULKHEAD TWO SIDES IF UNIT DOES NOT HAVE CLOSURE PANELS TO CEILING. SEE DTL 3/LF-902
.066	VERIFY DIMS IN FIELD PRIOR TO FABRICATION. PROVIDE DRAIN CENTERED AT RECESS, SPD & SCD
.079	LIMIT OF 2-INCH DEPRESSED SLAB FOR FLOOR TILE SLOPE TO DRAIN
.086	80" FLAT PANEL DISPLAY, SED & SEE AV DWG'S
.096	OUTSIDE CORNERS OF METAL LAB CASEWORK LOWERS TO RECEIVE 1" X 1" STAINLESS STEEL SELF-ADHERED CORNER GUARDS, TYP
.101	VERIFY DIMENSION WITH OPERABLE PARTITION MANUFACTURER FOR DOOR POCKET
.108	FLOOR CLEANOUT, SPD
.112	VOID IN CONCRETE AROUND COLUMN BASE - SEE 5/A-301 FOR FURTHER INFORMATION, TYP
.116	GAS REGULATOR, SPD
.134	ADA PARKING SIGN MOUNTED ON BUILDING (VAN) - SEE SHT C-502. PROVIDE 1/4" STANDOFF(S) BEHIND SIGN AT ATTACHMENT POINT(S)
.135	ADA PARKING SIGN MOUNTED ON BUILDING - SEE SHT C-502. PROVIDE 1/4" STANDOFF(S) BEHIND SIGN AT ATTACHMENT POINT(S)

WALL / PARTITION TAG LEGEND

FOR TYP EXTERIOR WALLS, SEE "WALL TYPES" SHT A-521
FOR TYP INTERIOR PARTITIONS, SEE "PARTITION TYPES" SHT A-521

WALL / PARTITION SYMBOL

- LETTER INDICATES WALL / PARTITION TYPE - SEE EXTERIOR WALL DETAILS & INTERIOR PARTITION DETAILS
- NUMBER INDICATES ASSEMBLY FIRE RATING IN HOURS (NON RATED WHEN NO NUMBER IS INDICATED)
- NUMBER INDICATES STUD SIZE - SEE "STUD SIZE SCHEDULE" BELOW 'X' INDICATES EXTERIOR WALL TYPE

STUD SIZE SCHEDULE

INDICATOR	STUD DEPTH (NOMINAL)	
2	1.5"	(2X2)
3	2.5"	(2X3)
4	3.5"	(2X4)
6	5.5"	(2X6)
8	7.25	(2X8)
10	9.25	(2X10)
12	11.25	(2X12)

NOTES:

1. TYP INTERIOR PARTITION IS TYPE 6A, UON
2. STUDS ARE AT 16" OC, UON

AGENCY APPROVAL STAMP:

IDENTIFICATION STAMP
DIV. OF THE STATE ARCHITECT
APP: 01-120890 INC:
REVIEWED FOR
SS ☑ FLS ☑ ACS ☑
DATE: 10/25/2023

TLCDARCHITECTURE
520 Third St. #250
Santa Rosa, CA 95401
o: 707.525.5600
f: 707.525.5616
tlcd.com

CONSULTANT:

STAMP:

LICENSED ARCHITECT
CARL SERRANO
C-32357
REN:12/31/23
STATE OF CALIFORNIA

REVISIONS:

Number	Date	Description

NAPA VALLEY COLLEGE WINE EDUCATION CENTER

2277 NAPA VALLEJO HWY
NAPA, CA 94558

NAPA VALLEY COLLEGE

DSA APPLICATION NUMBER:
01-120890

TLCD PROJECT NUMBER:
21062.00

DATE:
04/12/2023

© THESE DRAWINGS ARE INSTRUMENTS OF SERVICE AND ARE THE SOLE PROPERTY OF TLCD ARCHITECTURE. ANY USE WITHOUT WRITTEN CONSENT IS PROHIBITED.

ENLARGED FLOOR PLAN

A-401

10/4/2023 7:55:12 AM

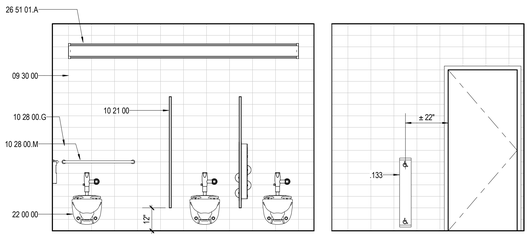

7A WOMEN 107 - NORTH
3/8" = 1'-0"

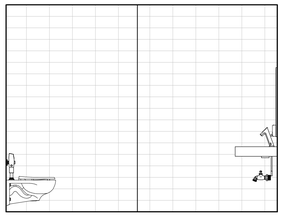

7B WOMEN 107 - EAST
3/8" = 1'-0"

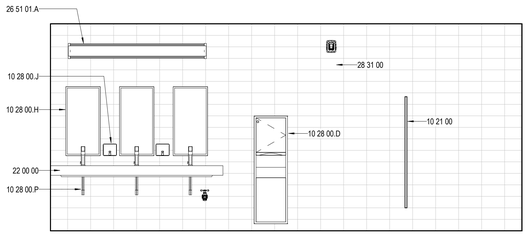

7C WOMEN 107 - SOUTH
3/8" = 1'-0"

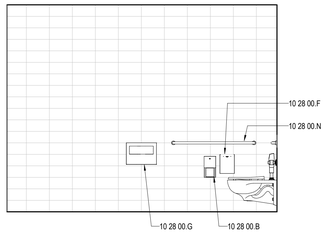

7D WOMEN 107 - WEST
3/8" = 1'-0"

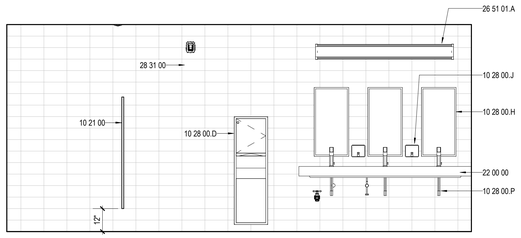

8A MEN 108 - NORTH
3/8" = 1'-0"

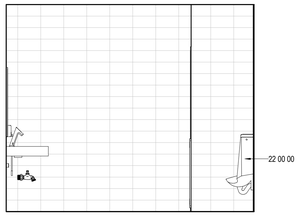

8B MEN 108 - EAST
3/8" = 1'-0"

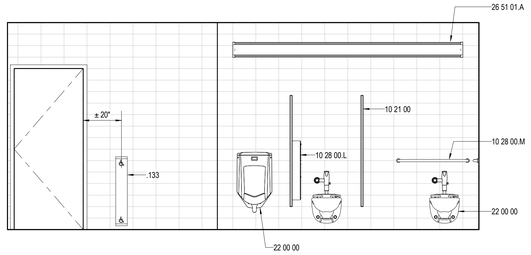

8C MEN 108 - SOUTH
3/8" = 1'-0"

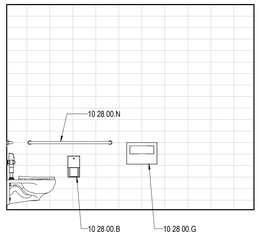

8D MEN 108 - WEST
3/8" = 1'-0"

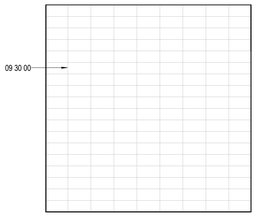

9A TOILET 109 - NORTH
3/8" = 1'-0"

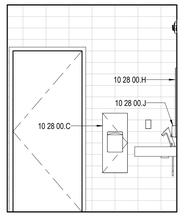

9B TOILET 109 - EAST
3/8" = 1'-0"

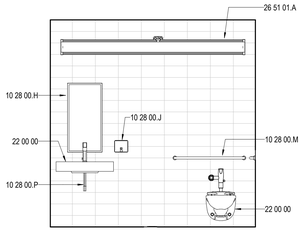

9C TOILET 109 - SOUTH
3/8" = 1'-0"

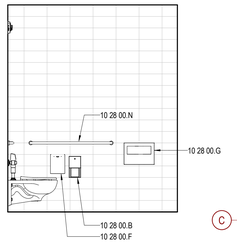

9D TOILET 109 - WEST
3/8" = 1'-0"

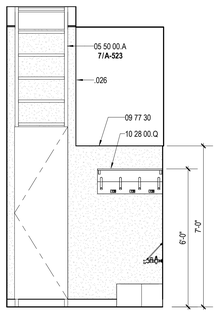

10B CUSTODIAN 110 - EAST
3/8" = 1'-0"

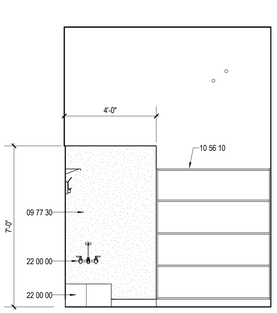

1CC CUSTODIAN 110 - SOUTH
3/8" = 1'-0"

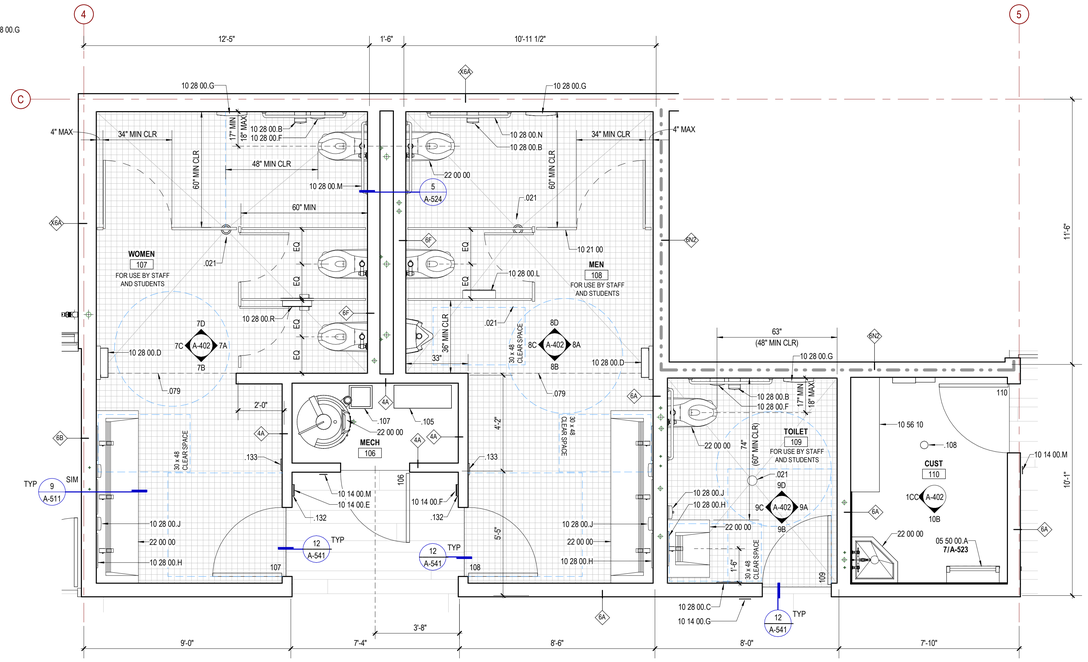

1 ENLARGED FLOOR PLAN
3/8" = 1'-0"

GENERAL NOTES

A. SEE SHT A-251 FOR GENERAL INTERIOR ELEVATION NOTES.

B. USE "SCHLUTER-JOLLY" AT TILE OUTSIDE CORNERS, TYP.

C. USE "SCHLUTER-DILEX-EHK" STAINLESS STEEL COVE AT TILE WALL-TO-FLOOR TRANSITION.

D. FOR TYPICAL MOUNTING HEIGHTS AND CLEARANCES AT FIXTURES AND TOILET ACCESSORIES SEE **18/A-511**

E. FOR CLEARANCES AT DOORS SEE **2/A-511**

F. FOR SIGNAGE AT DOORS SEE **20/A-511**

G. LOCATE TILE JOINTS AT WALL(S) FOR LARGEST TILE WIDTH AT ENDS OF WALL (TILE TO BE CENTERED ON WALL PLANE OR OFFSET 1/2 TILE WIDTH), TYP AT ALL WALL PLANES

REFERENCE KEYNOTE

05 50 00.A	METAL FABRICATIONS - LADDER
09 30 00	TILING
09 77 30	FIBERGLASS WALL PANELS
10 14 00.E	SIGNAGE - WOMEN ROOM SIGNAGE, SEE 20E/A-511
10 14 00.F	SIGNAGE - MEN ROOM SIGNAGE, SEE 20F/A-511
10 14 00.G	SIGNAGE - ALL GENDER ROOM SIGNAGE, SEE 20G/A-511
10 14 00.M	SIGNAGE - ROOM SIGNAGE, SEE 20M/A-511
10 21 00	METAL TOILET COMPARTMENTS
10 28 00.B	TOILET TISSUE (ROLL) DISPENSER (AT ACCESSIBLE WATER CLOSET) - BOBRICK B-4288
10 28 00.C	PAPER TOWEL (FOLDED) DISPENSER & WASTE RECEPTACLE - RECESSED - BOBRICK B-369903
10 28 00.D	PAPER TOWEL (FOLDED) DISPENSER & WASTE RECEPTACLE - SEMI-RECESSED - BOBRICK B-3942
10 28 00.F	SANITARY NAPKIN DISPOSAL UNIT - BOBRICK B-270
10 28 00.G	SEAT COVER DISPENSER - BOBRICK B-4221
10 28 00.H	MIRROR UNIT - BOBRICK B-290 1836
10 28 00.J	SOAP DISPENSER - BOBRICK B-4112
10 28 00.L	PARTITION-MOUNTED SEAT-COVER AND TOILET TISSUE DISPENSER - BOBRICK B-3479
10 28 00.M	ACCESSIBLE TOILET GRAB BAR - 36" - BOBRICK B-6806
10 28 00.N	ACCESSIBLE TOILET GRAB BAR - 48" - BOBRICK B-6806
10 28 00.P	UNDERLAVATORY GUARDS
10 28 00.Q	UTILITY SHELF WITH MOP AND BROOM HOLDER - BOBRICK B-239
10 28 00.R	PARTITION-MOUNTED SEAT-COVER, SANITARY NAPKIN DISPOSAL AND TOILET TISSUE DISPENSER - BOBRICK B-3571
10 56 10	METAL STORAGE SHELVING
22 00 00	PLUMBING FIXTURE, SPD
26 51 01.A	LIGHTING FIXTURE (TYP), SED
28 31 00	FIRE DETECTION AND ALARM, SFED

DRAWING NOTES

.021	FLOOR DRAIN, SPD. SLOPE FLOOR TO DRAIN, 2% MAX SLOPE, TYP
.026	RUN FRP FULL HEIGHT BEHIND LADDER - MATCH HATCH OPENING WIDTH
.079	LIMIT OF 2-INCH DEPRESSED SLAB FOR FLOOR TILE SLOPE TO DRAIN
.105	WATER PURIFICATION SYSTEM, CFCI - SPD, SED & SEE LAB DRAWINGS
.107	FLOOR SINK, SPD
.108	FLOOR CLEANOUT, SPD
.132	LOW ENERGY DOOR ACTUATOR, SED FOR ASSOCIATED WORK
.133	LOW ENERGY DOOR ACTUATOR, SED FOR ASSOCIATED WORK - CENTER BETWEEN TILE JOINTS. SEE DTL 19/A-522

AGENCY APPROVAL STAMP:

IDENTIFICATION STAMP
DIV. OF THE STATE ARCHITECT
APP: 01-120890 INC:
REVIEWED FOR
SS ☑ FLS ☑ ACS ☑
DATE: 10/25/2023

TLCDARCHITECTURE
520 Third St. #250
Santa Rosa, CA 95401
o: 707.525.5600
f: 707.525.5616
tlcd.com

CONSULTANT:

STAMP:

LICENSED ARCHITECT
CARL SERTAIN
C-32587
REN:12/31/23
STATE OF CALIFORNIA

REVISIONS:

Number	Date	Description

NAPA VALLEY COLLEGE WINE EDUCATION CENTER

2277 NAPA VALLEJO HWY
NAPA, CA 94558

NAPA VALLEY COLLEGE

DSA APPLICATION NUMBER:
01-120890

TLCD PROJECT NUMBER:
21062.00

DATE:
04/12/2023

ENLARGED FLOOR PLAN AND INTERIOR ELEVATIONS - RESTROOMS

A-402

© THESE DRAWINGS ARE INSTRUMENTS OF SERVICE AND ARE THE SOLE PROPERTY OF TLCD ARCHITECTURE. ANY USE WITHOUT WRITTEN CONSENT IS PROHIBITED.

10/4/2023 7:55:18 AM

NOTE:
TOILET PAPER DISPENSER, SANITARY FEMININE NAPKIN RECEPTACLE AND SEAT COVER DISPENSER SHALL BE SEMI-RECESSED, TYPICAL, UON. SEMI-RECESSED TOILET PAPER HOLDER WITHOUT STOPS.

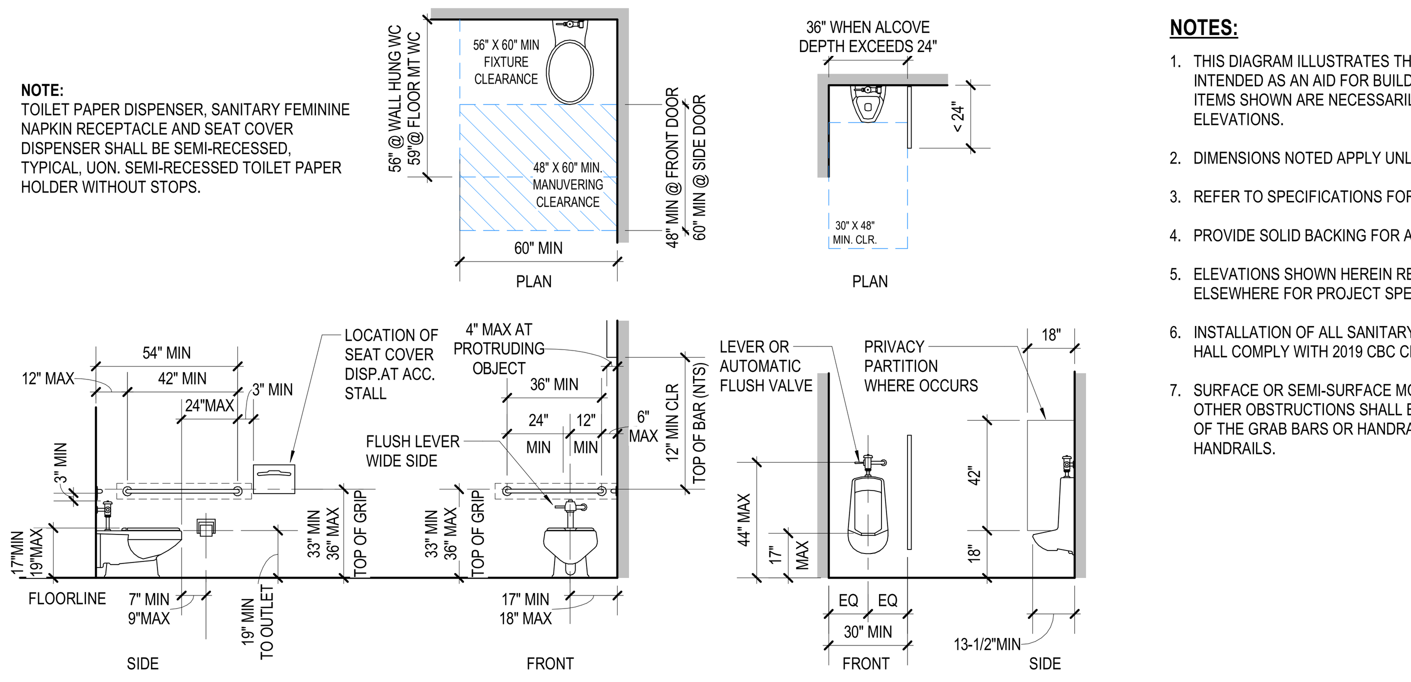

WATER CLOSET - WALL OR FLOOR MOUNTED TOILET
2022 CBC 11B-604

ACCESSIBLE URINAL
2022 CBC 11B-605

NOTES:

1. THIS DIAGRAM ILLUSTRATES THE SPECIFIC CODE REQUIRMENTS AND IS INTENDED AS AN AID FOR BUILDING DESIGN AND CONSTRUCTION. NOT ALL ITEMS SHOWN ARE NECESSARILY INCLUDED IN THIS PROJECT. SEE INTERIOR ELEVATIONS.
2. DIMENSIONS NOTED APPLY UNLESS NOTED OTHERWISE ELSEWHERE.
3. REFER TO SPECIFICATIONS FOR TYPE OF ACCESSORIES REQUIRED.
4. PROVIDE SOLID BACKING FOR ALL ACCESSORIES PER **9/A-561**
5. ELEVATIONS SHOWN HEREIN REPRESENT TYPICAL REQUIREMENTS. SEE ELSEWHERE FOR PROJECT SPECIFIC VARIATIONS.
6. INSTALLATION OF ALL SANITARY FACILITIES ACCESSIBLE TO THE DISABLED HALL COMPLY WITH 2019 CBC CHAPTER 11B AND 2010 ADA.
7. SURFACE OR SEMI-SURFACE MOUNTED ACCESSORIES, FLUSH VALVES, OR OTHER OBSTRUCTIONS SHALL BE NO CLOSER THAN 1-1/2" TO THE TANGENT OF THE GRAB BARS OR HANDRAILS. MIN 12" CLR ABOVE GRAB BARS OR HANDRAILS.

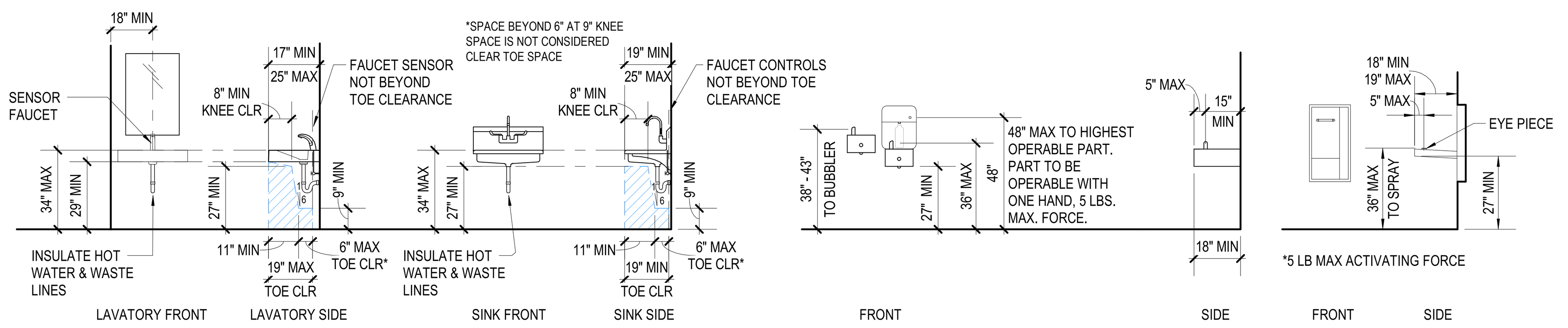

LAVATORY / SINK
2022 CBC 11B-606

DRINKING FOUNTAIN
2022 CBC 11B-602

EMERGENCY EYEWASH

PLUMBING FIXTURES

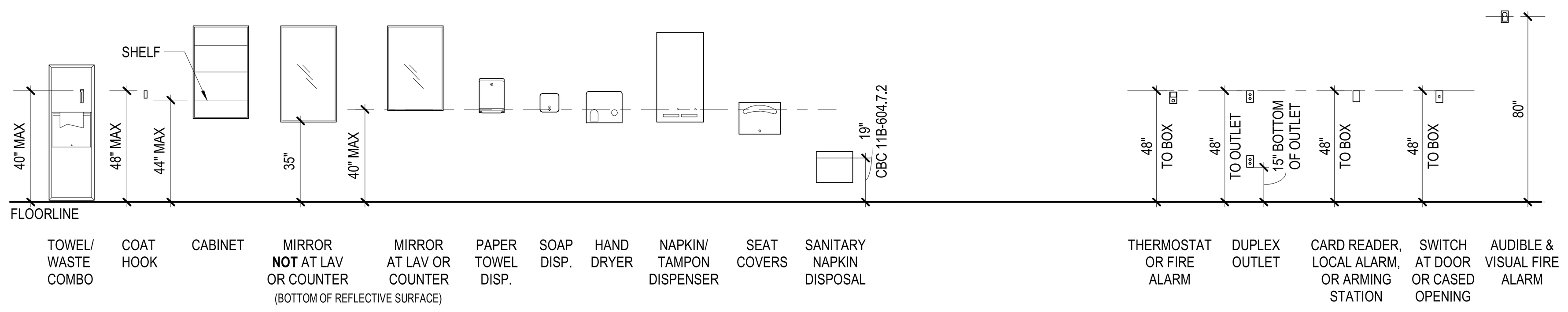

ACCESSORIES
2022 CBC 11B-603.5

18 TYPICAL MOUNTING HEIGHTS

1/4" = 1'-0"

SIGNAGE NOTES:

1. ALL SIGNS ARE TO CONFORM TO 2019 CBC CHAPTER 11B-703
2. SIGNAGE IDENTIFYING EXITS AND PERMANENT ROOMS AND SPACES SHALL HAVE BOTH RAISED CHARACTERS AND BRAILLE MESSAGES. ALL BRAILLE COMPONENTS SHALL BE AN INTEGRAL PART OF THE SIGN. APPLIED STRIPS ARE NOT ACCEPTABLE.
3. THE SIGNS INDICATED ARE FOR CONCEPT & CONTENT ONLY. THE CONTRACTOR SHALL SUBMIT SHOP DRAWINGS (INCLUDING EXACT LAYOUT & CONTENT) TO THE ARCHITECT FOR REVIEW.
4. SEE DOOR SCHEDULE FOR SIGN SCHEDULE.
   (A) (B) (C)
5. SIGNS SHALL HAVE A NON-GLARE FINISH.
6. SIGNS SHALL BE CENTERED +/-1" ON CENTERLINE OF DOOR. COLORS SHALL BE DISTINCTLY DIFFERENT FROM AND CONTRAST 70% TO THE COLOR OF THE DOOR.
7. FOR ADDITIONAL INFORMATION SEE BRAILLE NOTES, RAISED CHARACTER NOTES AND PICTOGRAM NOTES BELOW.

BRAILLE NOTES

BRAILLE SHALL BE CONTRACTED (GRADE 2)
DIMENSIONS:
PER TABLE 11B-703.3.1
CAPITALIZATION:
INDICATION OF UPPERCASE LETTER OR LETTERS SHALL ONLY BE USED BEFORE THE FIRST WORD OF SENTENCES, PROPER NOUNS & NAMES, INDIVIDUAL LETTERS OF THE ALPHABET, INITIALS, AND ACRONYMS.
POSITION:
BRAILLE SHALL BE POSITIONED BELOW CORRESPONDING TEXT IN A HORIZONTAL FORMAT, FLUSH LEFT OR CENTERED. IF TEXT IS MULTI-LINED, BRAILLE SHALL BE POSITIONED BELOW THE ENTIRE TEXT. BRAILLE SHALL BE SEPARATED 3/8" MIN. AND 1/2" MAX FROM ANY OTHER TACTILE CHARACTERS AND 3/8" MIN. FROM RAISED BORDERS AND DECORATIVE ELEMENTS.
INSTALLATION HEIGHT:
TACTILE CHARACTERS ON SIGNS SHALL BE LOCATED 48" MIN AFF, MEASURED FROM THE BASELINE OF THE LOWEST BRAILLE CELLS AND 60" MAX AFF MEASURED FROM THE BASELINE OF THE HIGHEST LINE OF RAISED CHARACTERS.
INSTALLATION LOCATION:
WHERE PROVIDED, THE TACTILE SIGN SHALL BE LOCATED ALONGSIDE THE DOOR AT THE LATCH SIDE. AT DOUBLE DOORS WITH ONE ACTIVE LEAF, THE SIGN SHALL BE LOCATED ON THE INACTIVE LEAF. AT DOUBLE DOORS WITH TWO ACTIVE LEAFS, THE SIGN SHALL BE LOCATED TO THE RIGHT OF THE RIGHT HAND DOOR. WHERE NO WALL SPACE IS AVAILABLEAT THE LATCH SIDE OF SINGLE DOOR OR RIGHT OF DOUBLE DOORS, SIGNS SHALL BE LOCATED ON THE NEAREST ADJACENT WALL. SIGNS SHALL BE LOCATED SUCH THAT A CLEAR FLOOR SPACE 18"MIN BY 18" MIN CENTERED ON THE TACTILE CHARACTERS IS PROVIDED BEYOND THE DOOR SWING. WHERE PERMANENT IDENTIFICATION SIGNS AREPROVIDED THEY SHALL BE PROVIDED ON THE APPROACH SIDE OF THE DOOR AS ONE ENTERSTHE ROOM OR SPACE. SIGNS THAT IDENTIFY EXITS SHALL BE LOCATED ON THE APPROACHSIDE AS ONE EXITS THE ROOM OR SPACE.

BRAILLE DIMENSIONS 2019 CBC TABLE 11B-703.3.1

MEASUREMENT RANGE	MIN. IN INCHES MAX. IN INCHES
DOT BASE DIAMETER	0.059 TO 0.063
DISTANCE BETWEEN TWO DOTS IN SAME CELL*	0.100
DISTANCE BETWEEN CORRESONDING DOTS IN ADJACENT CELLS *	.0300
DOT HEIGHT	0.025 TO 0.037
DISTANCE BETWEEN CORRESPONDING DOTS FROM ONE CELL DIRECTLY BELOW*	0.395 TO 0.400

* MEASURED CENTER TO CENTER

RAISED CHARACTERS NOTES

DEPTH:
1/32" MINIMUM ABOVE BACKGROUND
CASE:
UPPERCASE
STYLE:
SANS SERIF
PROPORTIONS:
CHARACTERS TO BE SELECTED FROM FONTS WHERE WIDTH OF UPPERCASE 'O' IS 60% MIN AND 110% MAX OF THE HEIGHT OF THE UPPERCASE 'I'.
CHARACTER HEIGHT:
5/8' MIN / 2" MAX MEASURED VERTICALLY FROM BASELINE OF CHARACTER, BASED ON THE HEIGHT OF UPPERCASED 'I'.
STROKE THICKNESS:
STROKE THICKNESS OF UPPERCASE LETTER 'I' SHALL BE 15% MAX OF THE HEIGHT OF THE CHARACTER. TEXT SHALL BE IN HORIZONTAL FORMAT
CHARACTER SPACING:
MEASURED BETWEEN THE TWO CLOSEST POINTS OF ADJACENT RAISED CHARACTERS. AT RECTANGULAR CROSS SECTIONS - 1/8" MIN AND 4 TIMES CHARACTER STROKE WIDTH MAX. AT OTHER CROSS SECTIONS - 1/16" MIN AND 4 TIMES CHARACTER STROKE WIDTH MAX SEPARATED FROM RAISED BORDERS & DECORATIVE ELEMENTS 3/8" MIN.
LINE SPACING:
SPACING BETWEEN BASELINE OF SEPARATE LINES OF RAISED CHARACTERS TO BE 135% MIN AND 170% MAX OF THE RAISED CHARACTER HEIGHT.
FORMAT:
TEXT SHALL BE IN HORIZONTAL FORMAT

PICTOGRAM NOTES

FIELD AREA:
6" MIN HEIGHT. CHARACTERS AND BRAILLE NOT TO BE LOCATED WITHIN THE PICTOGRAM FIELD
FINISH AND CONTRAST:
FINISH TO BE NON-GLARE. PICTOGRAMS SHALL CONTRAST WITH FIELD, EITHER LIGHT PICTOGRAM ON DARK FIELD OR DARK PICTOGRAM ON LIGHT FIELD.
TEXT DESCRIPTORS:
PICTOGRAMS TO HAVE TEXT DESCRIPTORS LOCATED DIRECTLY BELOW FIELD.

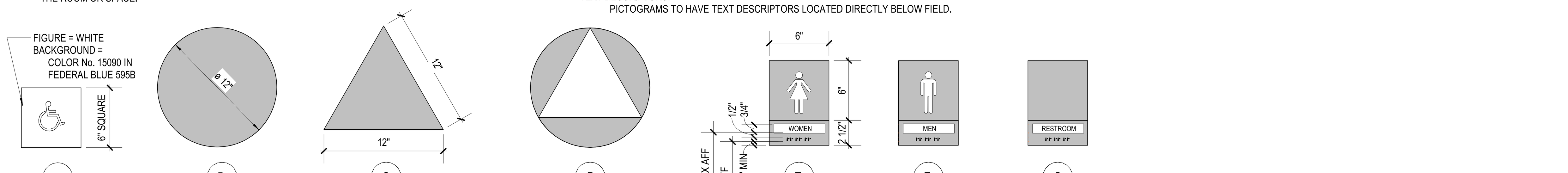

(A) **ISA**
(INTERNATIONAL SYMBOL OF ACCESSIBILITY) AT BUILDING ENTRANCES

(B) **WOMEN'S**
DOORWAYS LEADING INTO SANITARY FACILITIES SHALL BE IDENTIFIED BY A CIRCLE 1/4" THICK AND 12" IN DIAMETER

(C) **MEN'S**
DOORWAYS LEADING INTO SANITARY FACILITIES SHALL BE IDENTIFIED BY AN EQUILATERAL TRIANGLE 1/4" THICK WITH EDGES 12" LONG AND VERTEX POINTING UPWARD

(D) **ALL GENDER**
DOORWAYS LEADING INTO SANITARY FACILITIES SHALL BE IDENTIFIED BY A CIRCLE 1/4" THICK AND 12" IN DIAMETER WITH AN EQUILATERAL TRIANGLE 1/4" THICK WITH VERTEX POINTING UPWARD WITHIN THE 12" DIAMETER. COLOR OF TRIANGLE TO CONTRAST A MINIMUM OF 70% WITH THE COLOR OF THE CIRCLE. CIRCL TO CONTRAST WITH DOOR PER CBC 11B-703.7.2.6.3

(E) **WOMEN (ROOM SIGNAGE)**

(F) **MEN (ROOM SIGNAGE)**

(G) **ALL GENDER (ROOM SIGNAGE)**

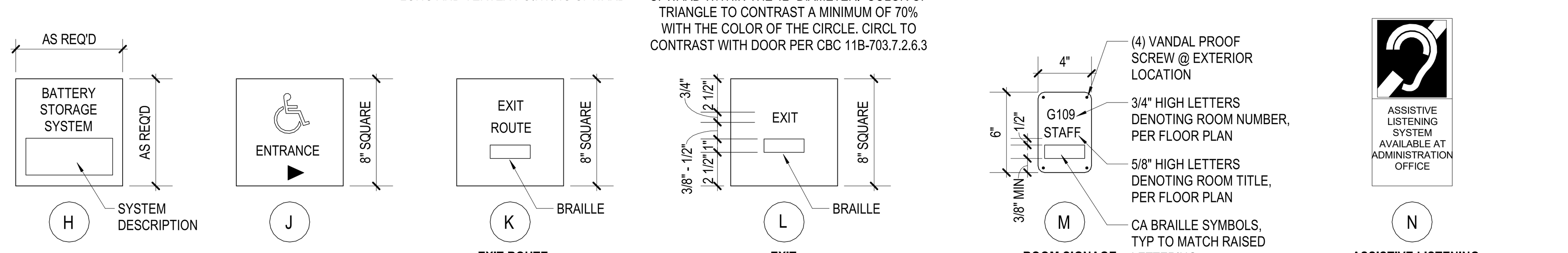

(H) **BATTERY STORAGE SYSTEM**
PER CFC 1207.4.8

(J) **NON-ACCESSIBLE BLDG ENTRANCES**
JR - ARROW TO RIGHT
JL - ARROW TO LEFT

(K) **EXIT ROUTE**
FOR USE AT EXITS WHERE ILLUMINATED EXIT SIGNAGE IS REQUIRED OR PROVIDED

(L) **EXIT**
FOR USE AT EXITS WHERE ILLUMINATED EXIT SIGNAGE IS REQUIRED OR PROVIDED

(M) **ROOM SIGNAGE**
NOTE: COLORS AND STYLE TO MATCH EXISTING ON CAMPUS.

(N) **ASSISTIVE LISTENING**
SEE **7/A-511**

10/4/2023 7:55:20 AM

20 SIGNAGE

1 1/2" = 1'-0"

NOTES:

1. HOT WATER AND WASTE LINES TO BE INSULATED
2. FAUCET LEVER HANDLE CONTROLS W/ 5 LBS MAX OPERATING FORCE, SPD
3. 6-1/2" MAX SINK DEPTH, SPD
4. FAUCET TO ALIGN WITH TOE SPACE
5. FAUCET WITH AUTO SENSOR CONTROL, SPD

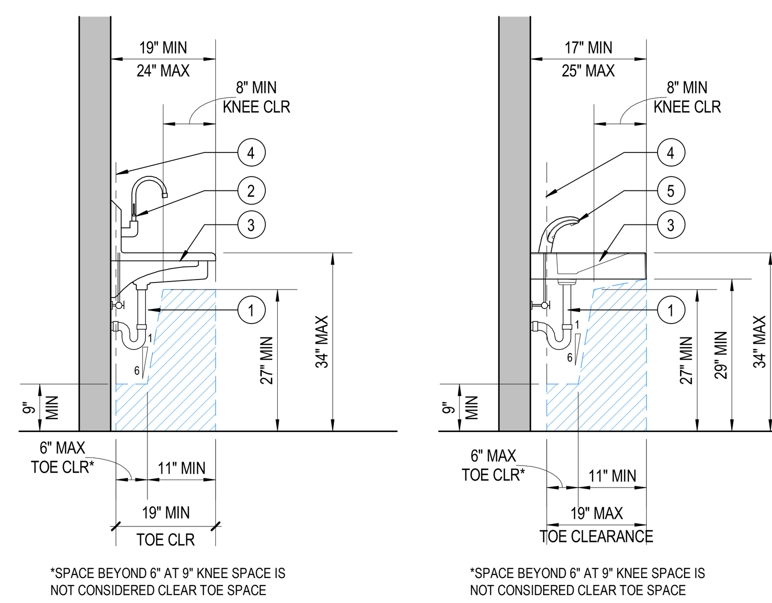

9 CLEARANCE AT SINK / LAVATORY

1/2" = 1'-0"
A-402

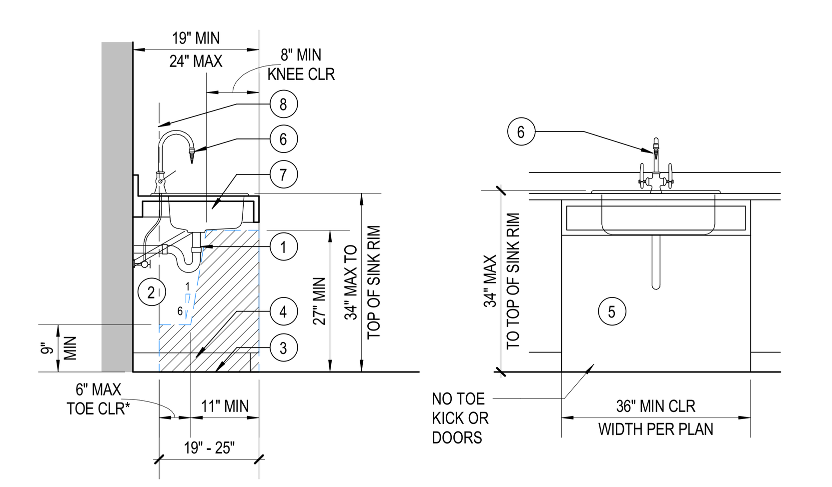

NOTES:

1. INSULATE HOT WATER AND WASTE LINES.
2. FINISH ENDS OF ADJACENT CABINETS WHERE OCCUR.
3. EXTEND FINISH FLOORING TO WALL UNDER SINK CABINET.
4. EXTEND BASE TO AND ACROSS WALL UNDER SINK CABINET.
5. FINISH WALLS AT BACK OF CABINET.
6. LEVER HANDLE CONTROLS W/ 5 LBS MAX OPERATING FORCE, SPD
7. 6-1/2" MAX SINK DEPTH, SPD
8. FAUCET TO ALIGN WITH TOE SPACE
9. FOR ADDITIONAL INFORMATION, SEE **4/A-511**

*SPACE BEYOND 6" AT 9" KNEE SPACE IS NOT CONSIDERED CLEAR TOE SPACE

10 ACCESS - SINK BASE CABINET

1/2" = 1'-0"
A-251

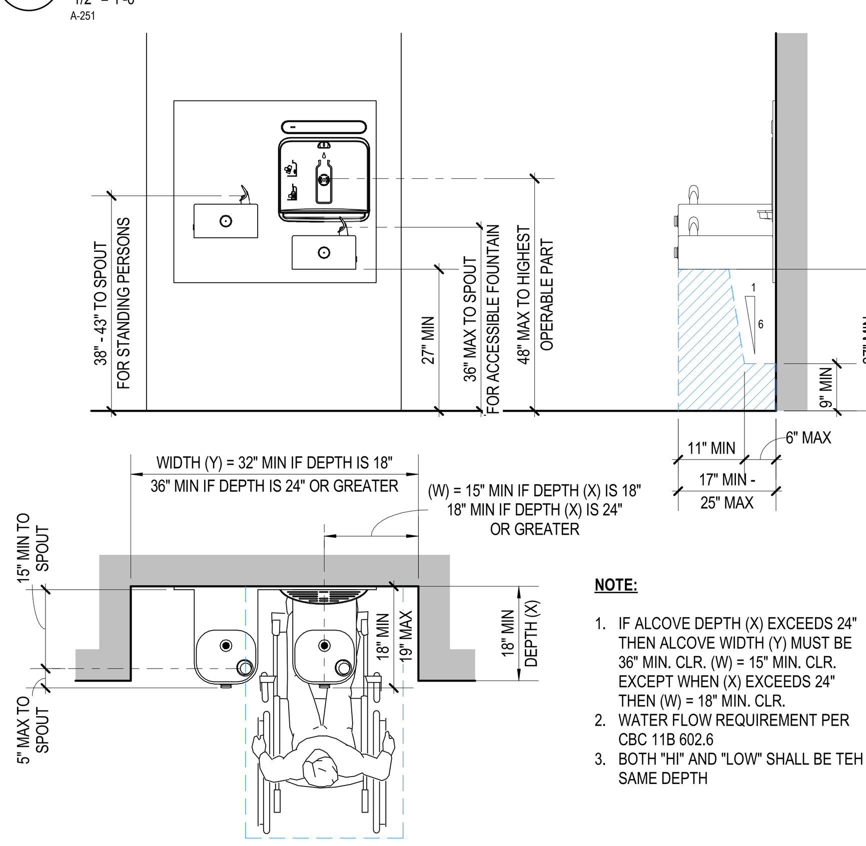

NOTE:

1. IF ALCOVE DEPTH (X) EXCEEDS 24" THEN ALCOVE WIDTH (Y) MUST BE 36" MIN. CLR. (W) = 15" MIN. CLR. EXCEPT WHEN (X) EXCEEDS 24" THEN (W) = 18" MIN. CLR.
2. WATER FLOW REQUIREMENT PER CBC 11B 602.6
3. BOTH "HI" AND "LOW" SHALL BE TEH SAME DEPTH

11 DRINKING FOUNTAIN ALCOVE

1/2" = 1'-0"

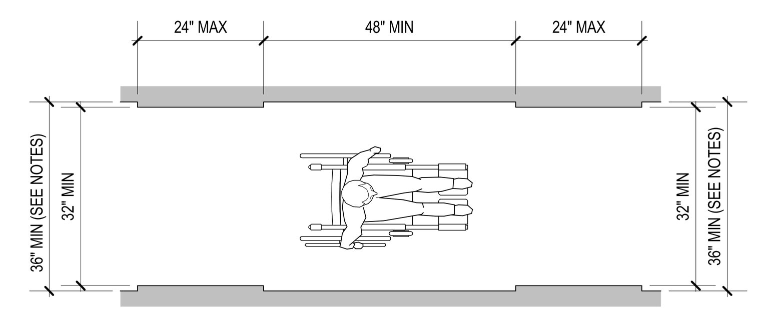

NOTES:

1. 44" MIN FOR WALKING SURFACES IN CORRIDORS SERVING OCCUPANT LOAD OF 10 OR MORE.
2. 48" MIN FOR SIDEWALKS AND WALKS.
3. 36" MIN FOR AISLES WITH SERVING ELEMENTS ON ONESIDE ONLY. 44" MIN FOR AISLE WITH SERVING ELEMENTS ON BOTH SIDES.
4. THE CLEAR WIDTH FOR ACCESSIBLE ROUTES TO ACCESSIBLE TOILET COMPARTMENTS SHALL BE 44".
5. FOR ADDITIONAL INFORMATION REFER TO CBC 11B-403

5 ROUTE CLEAR WIDTH

1/4" = 1'-0"

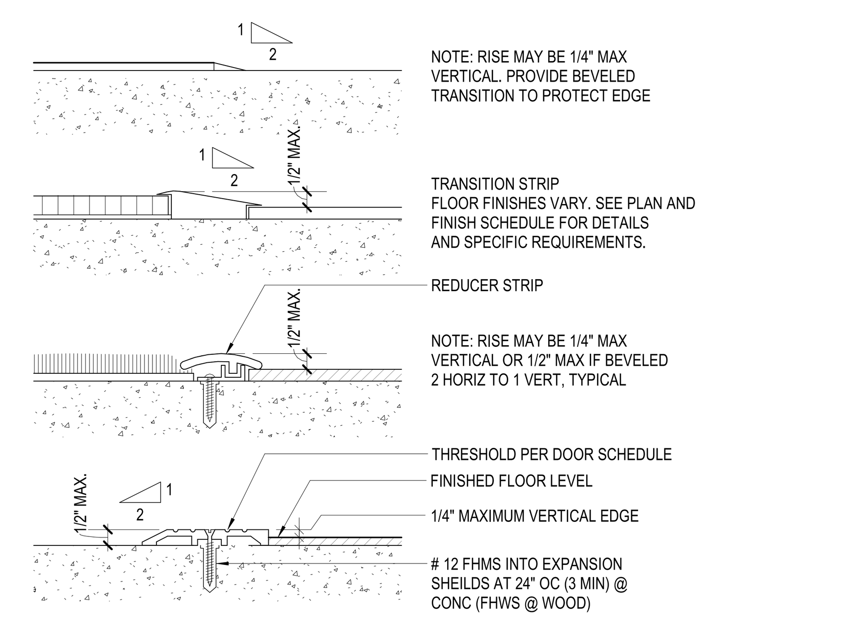

6 FLOORING TRANSITIONS

3" = 1'-0"

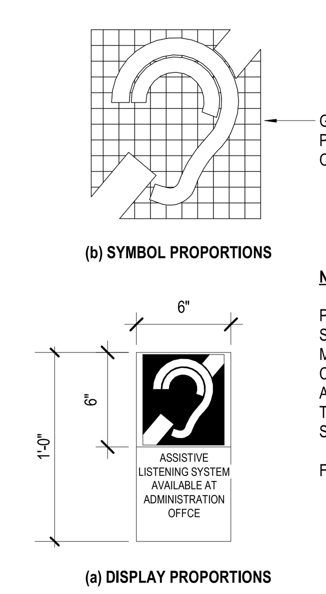

NOTES:

PROVIDE (2) PORTABLE ASSISTIVE LISTENING SYSTEMS, EACH WITH A TRANSMITTER AND A MINIMUM OF (2) RECEIVERS, FOR USE IN THE CLASSROOMS WITHOUT AUDIO AMPLIFICATION. THE ASSISTIVE LISTENING RECEIVERS AND TRANSMITTERS SHALL BE STORED IN THE SCHOOL SITE ADMINISTRATION OFFICE UNTIL REQUESTED.

FOR ADDITIONAL INFORMATION SEE **20/A-511**

7 ASSIST. LISTENING SIGNAGE

1 1/2" = 1'-0"

NOTES:

1. DIMENSIONS SHOWN ARE RECOMMENDED LOCATIONS FOR ARCHITECTURAL HARDWARE, FOR STANDARD STEEL DOORS AND FRAMES PER DOOR & HARDWARE INSTITUTE
2. LOUVERS NOT PERMITTED AT RATED DOORS
3. DEAD BOLTS NOT ALLOWED UNLESS OPERABLE FROM INSIDE WITHOUT USE OF A KEY OR ANY SPECIAL KNOWLEDGE
4. SEE DOOR SCHEDULE FOR ADDITIONAL SIGNAGE INFORMATION.
5. ALL OPERABLE HARDWARE INCLUDING LEVER HANDLES, DEAD BOLTS, AND PANIC HARDWARE SHALL BE MOUNTED BETWEEN 34"-44" AFF
6. ALL SIGNAGE SHALL COMPLY WITH CBC 2022 11B-703

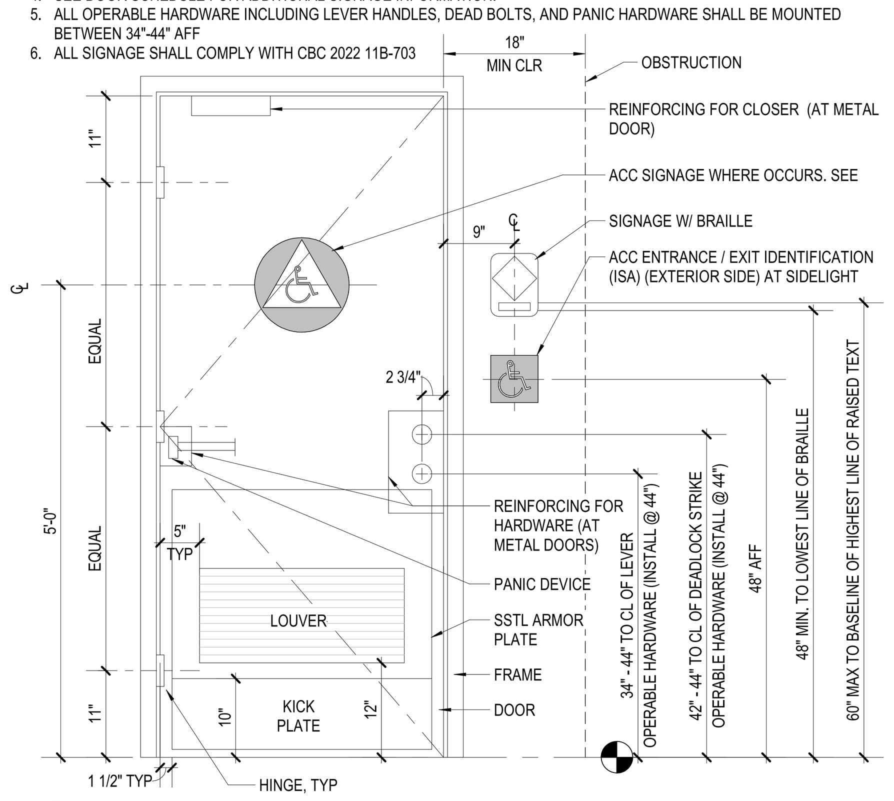

8 ACCESS - DOOR SIGNAGE

3/4" = 1'-0"

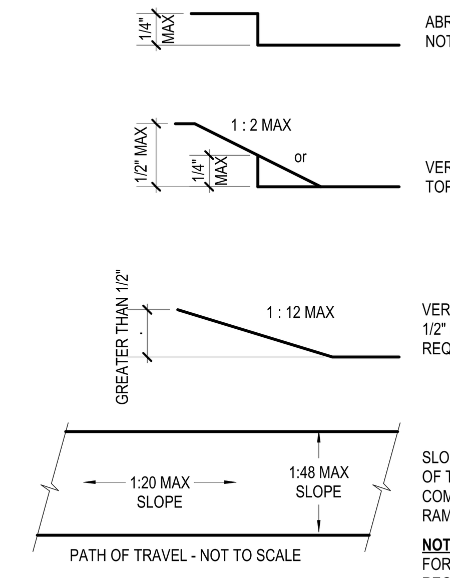

NOTE:
FOR ADDITIONAL INFORMATION REGARDING ACCESSIBLE ROUTES REFER TO CBC 11B DIV. 4

1 ACCESSIBLE ROUTES

1 : 1

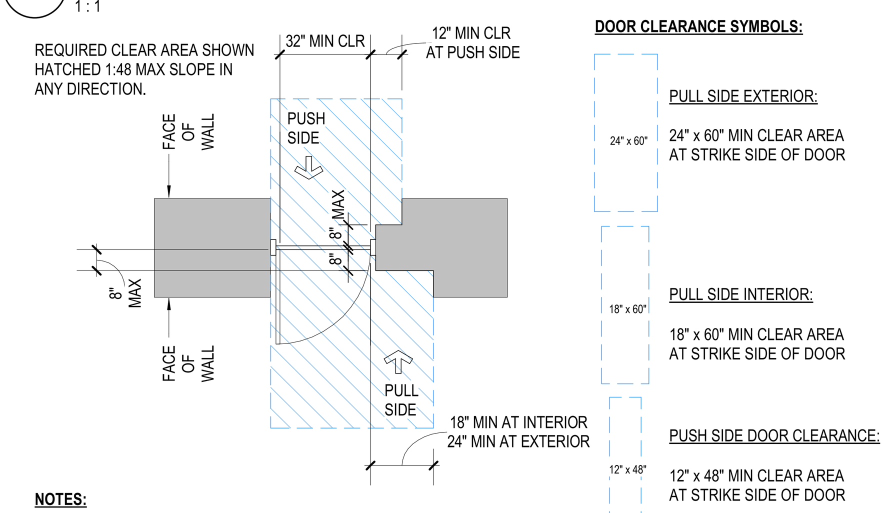

NOTES:

1. DOOR REQUIREMENTS REFER TO CBC 11B-404
2. CLEAR OPENING IS MEASURED BETWEEN THE DOOR AND THE STOP WITH THE DOOR OPEN 90°
3. CLEAR AREA IS MEASURED FROM THE STRIKE EDGE OF GATE OR DOOR IN ITS CLOSED POSITION AND ARE MEASURED FROM FACE OF FINISH.
4. CLEAR AREA IS REQUIRED WHERE DEPTH OF JAMB IS 8" OR MORE AS MEASURED PERPENDICULAR FROM FACE OF DOOR AT STRIKE SIDE TO ADJACENT FACE OF WALL.
5. MINIMUM CLEAR AREA IS REQUIRED WHERE DOOR OR GATE IS EQUIPPED WITH BOTH A LATCH AND A CLOSER.
6. CHANGES IN LEVEL PER CBC 11B-303. VERTICAL - NOT TO EXCEED 1/4" WITHOUT EDGE TREATMENT. LEVELED - CHANGES BETWEEN 1/4" MIN AND 1/2" MAX SHALL BE BEVELED WITH 1:2 MAX SLOPE.
7. FLOOR TRANSITIONS TO BE CENTERED AT CENTERLINE OF THE DOOR, UON SEE **6/A-511**

2 DOOR CLEARANCES

1/4" = 1'-0"

TURNING SPACE (CBC 11B-304):

PER CBC 603.2.3 DOOR MAY ENCROACH INTO THE TURNING SPACE BY 12" MAX.

CIRCULAR:
5'-0" CLEAR TURN-AROUND AREA.

T-SHAPED:
T-SHAPED WITHIN A 60" SQUARE.

CLEAR FLOOR OR GROUND SPACE (CBC 11B-305.3):

PER CBC 603.2.3 DOOR MAY ENCROACH INTO THE TURNING SPACE BY 12" MAX.

30"MIN. x 48" MIN. CLEAR AREA IN FRONT OF ACCESSIBLE ELEMENTS. 1:48 SLOPE MAX.

CLEAR FLOOR OR GROUND SPACE AT ALCOVE (CBC 11B-305.7):

ALCOVE FORWARD APPROACH:

ALCOVE PARALLEL APPROACH:

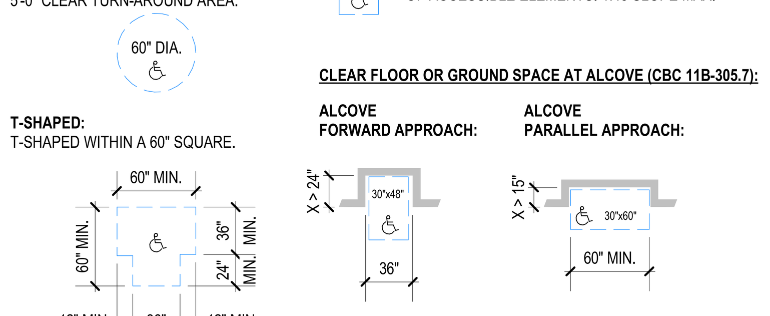

NOTE FOR DOOR CLEARANCES SEE

3 TURNING & FLOOR CLEARANCES

1/8" = 1'-0"

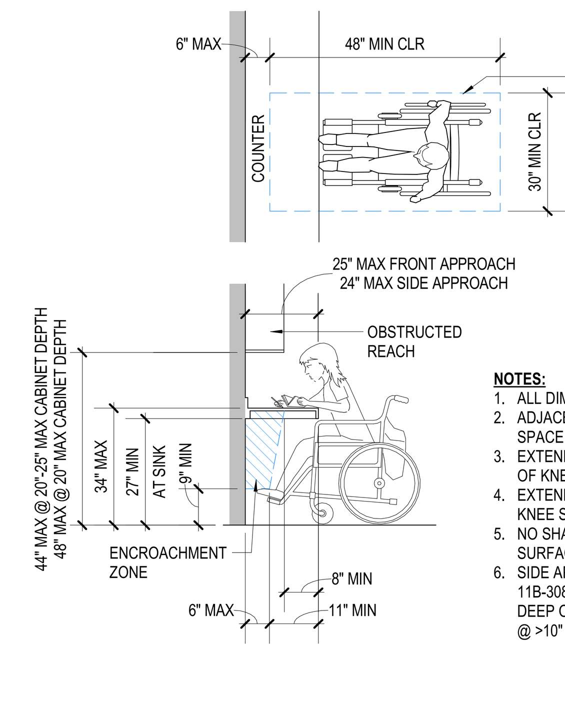

NOTES:

1. ALL DIMENSIONS FROM FACE OF FINISH.
2. ADJACENT AND REAR WALLS OF OPEN KNEE SPACE TO BE FINISHED.
3. EXTEND BASE CONTINUOUSLY AT PERIMETER OF KNEE SPACE.
4. EXTEND FINISH FLOORING CONTINUOUSLY INTO KNEE SPACE.
5. NO SHARP OR COURSE SURFACES. ALL SURFACES SHALL BE FINISHED SMOOTH
6. SIDE APPROACH REQUIREMENTS PER CBC SEC 11B-308.3.2 - 48" MAX HIGH REACH @ 10" MAX DEEP OBSTRUCTION. 46" MAX HIGH REACH @ >10" - 24" MAX DEEP OBSTRUCTION.

4 TOE & KNEE CLEARANCE

1/4" = 1'-0"
A-251

AGENCY APPROVAL STAMP:

IDENTIFICATION STAMP
DIV. OF THE STATE ARCHITECT
APP: 01-120890 INC:
REVIEWED FOR
SS ☑ FLS ☑ ACS ☑
DATE: 10/25/2023

TLCDARCHITECTURE
520 Third St. #250
Santa Rosa, CA 95401
o: 707.525.5600
f: 707.525.5616
tlcd.com

CONSULTANT:

STAMP:

LICENSED ARCHITECT
CARL SERVAIS
C-32941
REN:12/31/23
STATE OF CALIFORNIA

REVISIONS:

Number	Date	Description

NAPA VALLEY COLLEGE WINE EDUCATION CENTER

2277 NAPA VALLEJO HWY NAPA, CA 94558

NAPA VALLEY COLLEGE

DSA APPLICATION NUMBER:
01-120890

TLCD PROJECT NUMBER:
21062.00

DATE:
04/12/2023

© THESE DRAWINGS ARE INSTRUMENTS OF SERVICE AND ARE THE SOLE PROPERTY OF TLCD ARCHITECTURE. ANY USE WITHOUT WRITTEN CONSENT IS PROHIBITED.

DETAILS - ACCESSIBLE

A-511

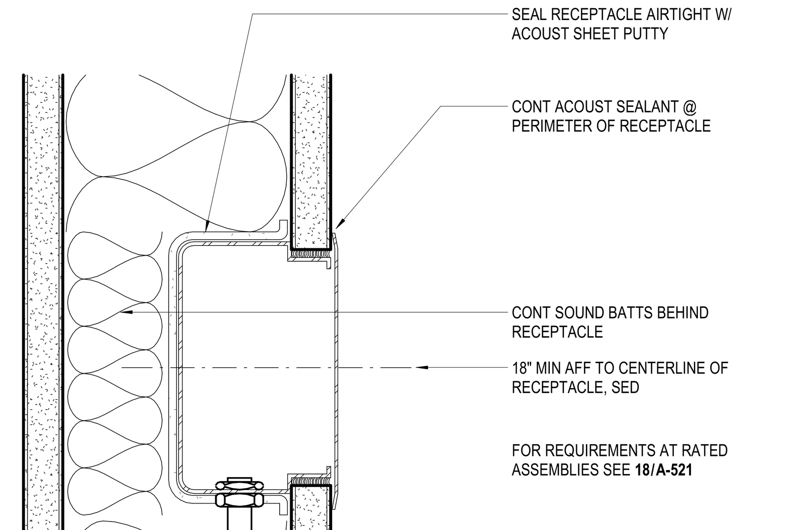

NOTES:
1. RECEPTACLES SHALL NOT BE PLACED BACK TO BACK WITHIN THE SAME STUD SPACE
2. MIN. OFFSETS ARE AS FOLLOWS:
   A) 16" AT ACOUSTICAL PARTITIONS
   B) 24" AT RATED PARTITIONS
   C) 12" ALL OTHER CONDITIONS

17 OUTLET @ INTERIOR PARTITION
6" = 1'-0"

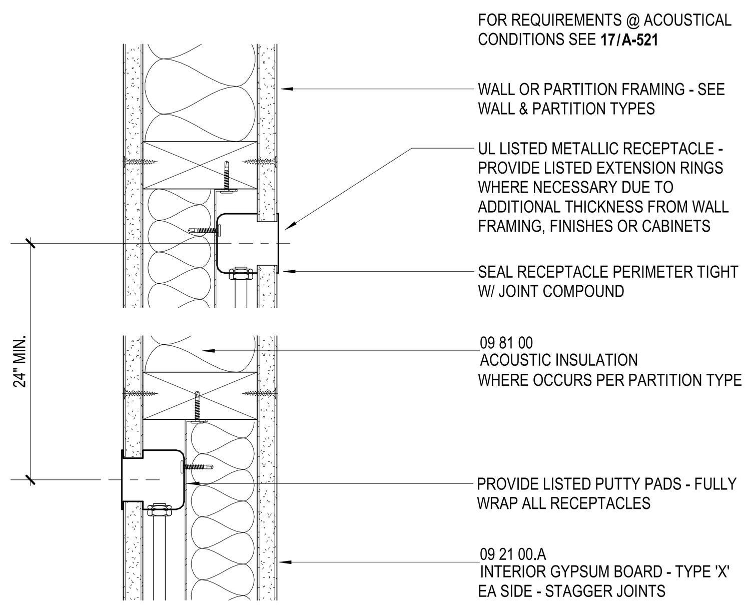

RECEPTACLE LIMITATIONS:
MAX RECEPTACLE AREA - 16 SQ IN EA
MAX OPENINGS - 100 SQ IN / 100 SQ FT

18 OUTLET @ RATED PARTITION
3" = 1'-0"

ASSEMBLY DESCRIPTION

FIREWALL PENETRATION UL W-L-7001
F Rating - 1 HR
T Rating - 0 & 1 HR (see item 2 below)

1. Wall Assembly - Any 1 HR fire-resistant gypsum panel wall assembly. Joints finished with joint tape and compound; fasteners finished with joint compound.
2. Air Duct - Up to 3" by 10" prefabricated 24 GA. sheet metal air duct. Minimum 7/16" to maximum 1-5/8" annular space between duct and periphery of opening is required. Air duct to be rigidly supported on both sides of the wall assembly.
3. Forming Material - Minimum 2-1/2" of fire safing insulation with nominal density of 4 pcf, and bearing the UL Classification Marking.
4. Fill, Void or Cavity Material - Minimum 1/2" depth of fire rated caulking compound installed on each side of the wall.

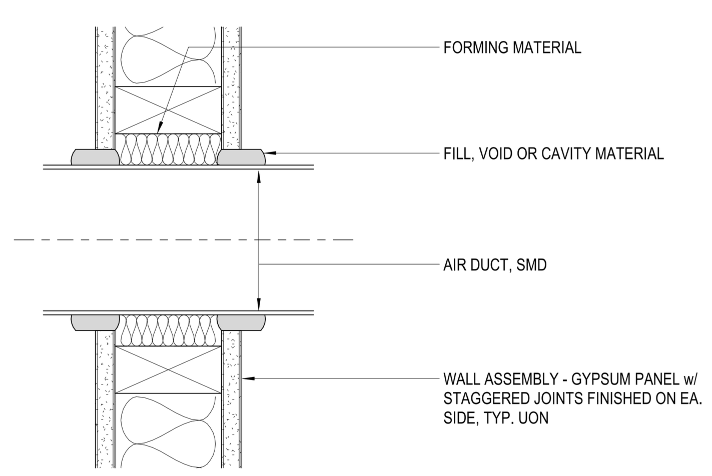

19 FIRE PEN @ DUCT - UL WL 7001
3" = 1'-0"

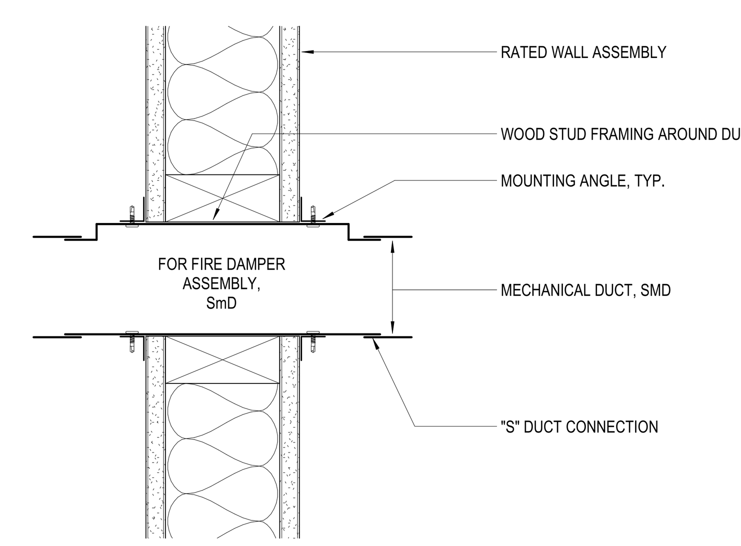

20 FIRE PEN. @ MECH DUCT
3" = 1'-0"

System No. W-L-3134
F Ratings - 1 and 2 Hr (See Item 1)
T Ratings - 0 Hr

ASSEMBLY DESCRIPTION

FIREWALL PENETRATION UL WL3034 — December 22, 1998

F Rating-1 Hr. — W-L-3134
T Rating 0 & 1 Hr. (see item 2 below)

1. Wall Assembly - The 1 or 2 hr fire-rated gypsum wallboard / stud wall assembly shall be constructed of the materials and in the manner described in the individual U300 or U400 Series Wall or Partition Designs in the UL Fire Resistance Directory and shall include the following construction features:
   A. Studs - Wall framing shall consist of either wood studs or steel channel studs. Wood studs to consist of nominal 2 x 4 at 16" OC Steel studs to be min. 3-5/8" wide and spaced 24" OC
   B. Gypsum Board* - 5/8" thick, 4 ft. wide with square or tapered edges. The gypsum wallboard type, thickness, number of layers, fastener type and sheet orientation shall be as specified in the individual U300 or U400 Series Designs in the UL Fire Resistance Directory. Max. diameter of opening is 8". The hourly F Rating of the firestop system is equal to the hourly fire rating of the wall assembly in which it is installed.
2. Steel Sleeve - Nominal 8" diameter (or smaller) by 9 or 10 inch long Schedule 5 (or heavier) steel pipe tightly fit into through openings in gypsum wallboard and centered in wall thickness.
3. Cables - Aggregate cross-sectional area of cables in sleeve to be max. 26 percent of the cross-sectional area of the sleeve. Cables to be tightly bundled and centered within the steel sleeve. The annular space within the firestop system shall be a min. 2". Cables to be rigidly supported on both sides of the wall. Any combination of the following types and sizes of cables may be used:
   A. Max. 200 pair No. 24 AWG (or smaller) copper conductor cable with polyvinyl chloride (PVC) jacketing and insulation.
   B. Max. 1/C, 750 kcmil power cable with copper conductors and cross-linked polyethylene (XLPE) jacketing.
   C. Max. 3/C No. 2/0 AWG (or smaller) aluminum or copper conductor service entrance cable with PVC insulation and jacket.
   D. Max. 3/C No. 8 WG (or smaller) nonmetallic sheathed (Romex) cable with copper conductors, PVC insulation and jacket.
   E. Max. 7/C No. 2/0 AWG (or smaller) multiconductor power and control cables with XLPE or PVC insulation and XLPE or PVC jacket.
   F. Max. RG59/U (or smaller) coaxial cable with fluorinated ethylene insulation and jacketing.
   G. Max. 62.5/48 fiber optic cable with PVC insulation and jacketing.
   H. Max. 4/C No. 2/0 (or smaller) aluminum or copper conductor aluminum or steel Metal-Clad # or Armored-Clad # cable.
   I. Max. 4 pair No. 24 AWG (or smaller) copper conductor Category 5 cable with hylar insulation and jacket.
4. Fill, Void or Cavity Material Pillows - Max. 9 in. long by 6 in. wide by 3 in. thick plastic covered intumescent pillows installed within opening. Pillows tightly packed into opening to fill annular space between cables and steel sleeve.
5. Fill, Voild or Cavity Material Putty (Optional, Not Shown) - After installation of the pillows (Item 4), putty applied to seal any voids between the cables, and between the cables and the pillows on both sides of the wall assembly. Specified Technologies - SpecSeal Putty or approved equivalent.

* Bearing the UL Classification Marking — Guide XHEZ
\# Bearing the UL Listing Mark — Through-
Penetration Firestop Systems

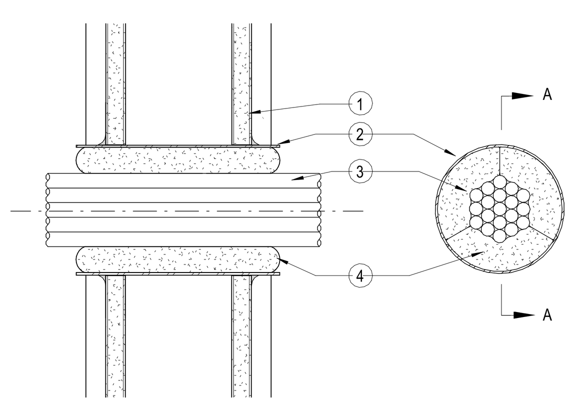

14 FIRE PEN @ WALL UL WL3134
3" = 1'-0"

ASSEMBLY DESCRIPTION

FIRE WALL PENETRATION UL WL 1039
F Rating - 1 HR
T Rating - 0 & 1 HR (see Item 2 below)

1. Wall Assembly - Any 1 HR fire-resistant gypsum panel wall assembly. Joints finished with joint tape and compound; fasteners finished with joint compound.
2. Metallic Pipe - Any of the following may be used:
   A. Nominal 4" diameter (or smaller) Schedule 10 (or heavier) steel pipe. A minimum 1/4" to maximum 1-1/4" annular space between pipe and periphery of opening is required - 0 HR T Rating.
   B. Nominal 4" diameter (or smaller) cast or ductile iron pipe. A minimum 1/4" to maximum 1-5/8" annular space between pipe and periphery of opening is required - 0 HR T Rating.
   C. Nominal 4" diameter (or smaller) electrical metallic tubing or steel conduit. A minimum 1/4" to maximum 1-5/8" annular space between pipe and periphery of opening is required. A 1/2" diameter (or smaller) electrical metallic tubing or steel conduit has 1 HR T Rating; larger than 1/2" diameter has 0 HR T Rating.
   D. Nominal 4" diameter (or smaller) Type L (or heavier) copper tubing. A minimum 1/4" to maximum 1-5/8" annular space between pipe and periphery of opening is required - 0 HR T Rating.
3. Forming Material - Minimum 2-1/2" of fire safing insulation with nominal density of 4 pcf, and bearing UL Classification Marking.
4. Fill, Void or Cavity Material - Minimum 1/2" depth of fire rated caulking compound installed on each side of the wall.

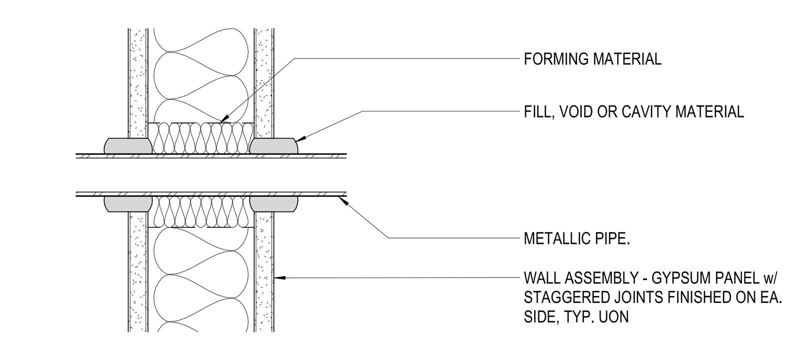

15 FIRE PEN. @ PIPE - UL WL 1039
3" = 1'-0"

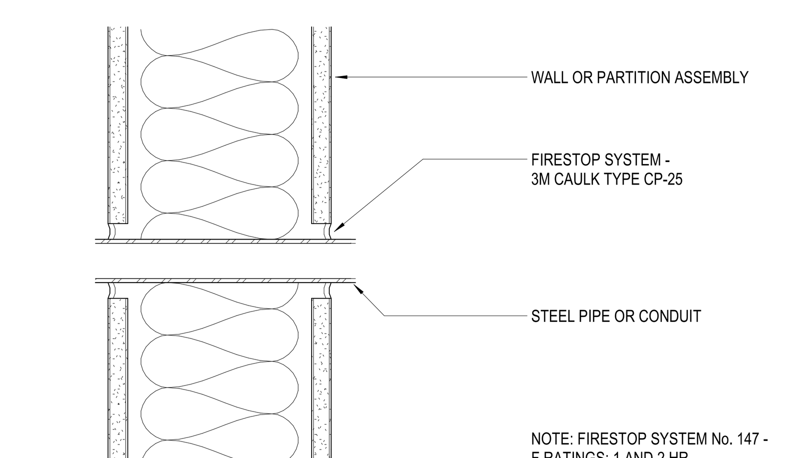

NOTE: FIRESTOP SYSTEM No. 147 -
F RATINGS: 1 AND 2 HR.
T RATINGS: 0, 1, 1-1/2 AND 2 HR.

FIRESTOP CONFIGURATION 'A' SHOWN

UL SYSTEM No 147

16 FIRE PEN @ PIPE - UL NO 147
3" = 1'-0"

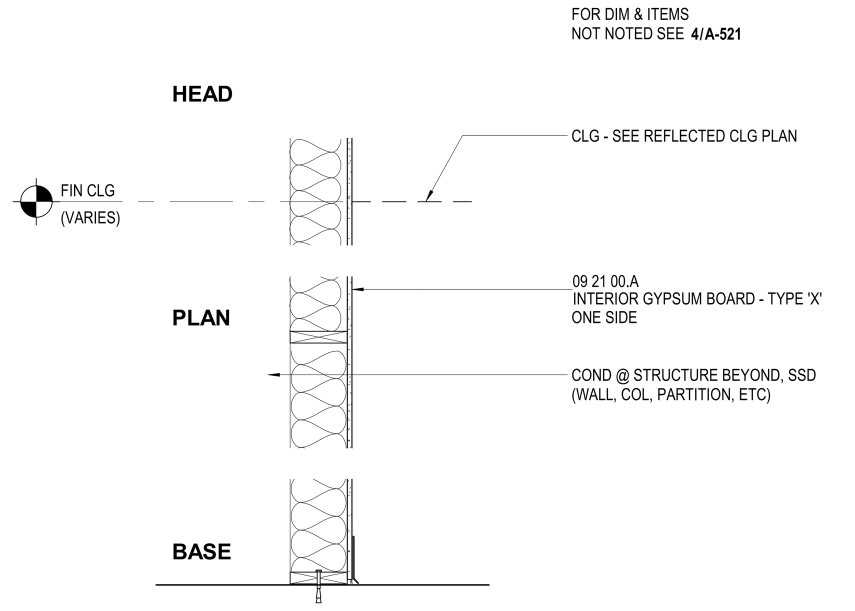

9 PARTITION TYPE F
3/4" = 1'-0" — 1 SIDED - NON RATED

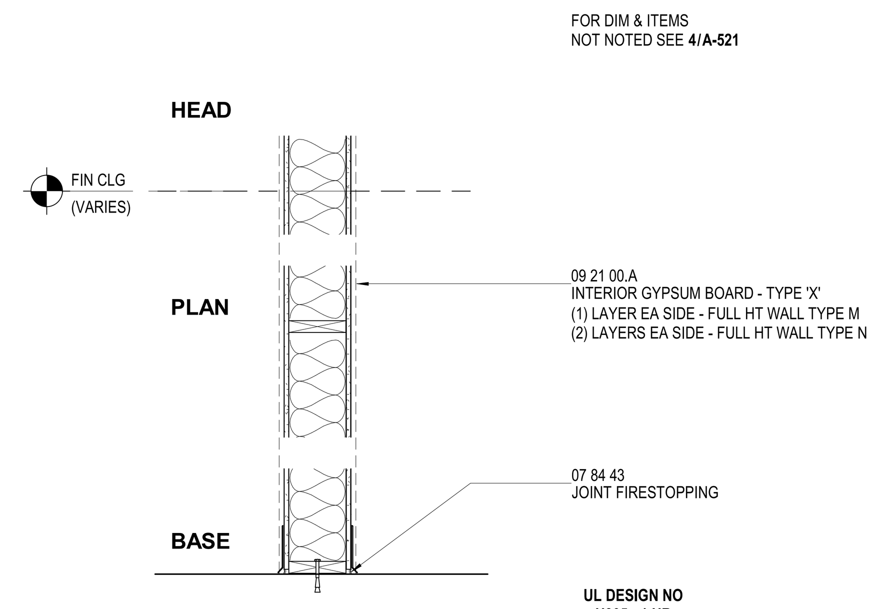

UL DESIGN NO
U305 - 1 HR
U301 - 2 HR

10 PARTITION TYPE M & N
3/4" = 1'-0" — FIRE BARRIER: (M) - 1 HR RATED; (N) - 2 HR RATED

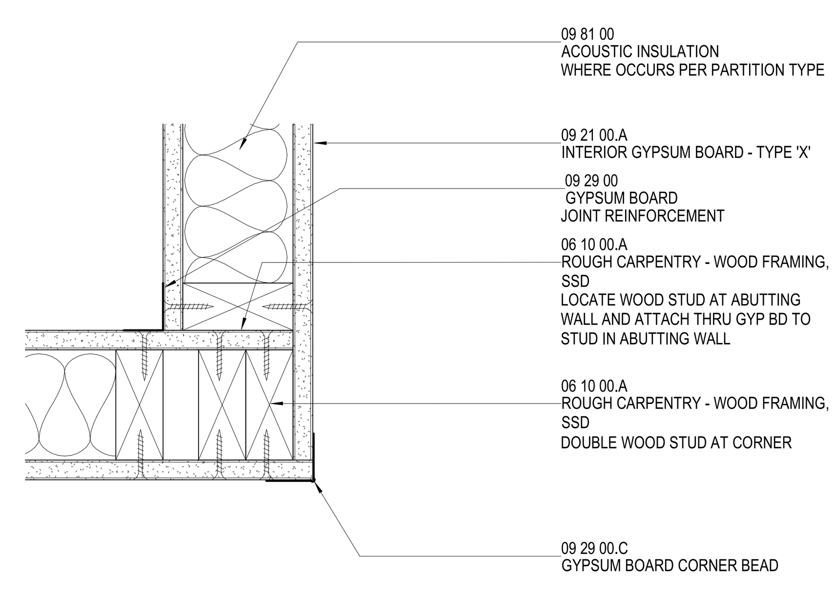

SEE STRUCTURAL DRAWINGS ALSO

11 FIRE RATED PARTITION CORNER
3" = 1'-0"

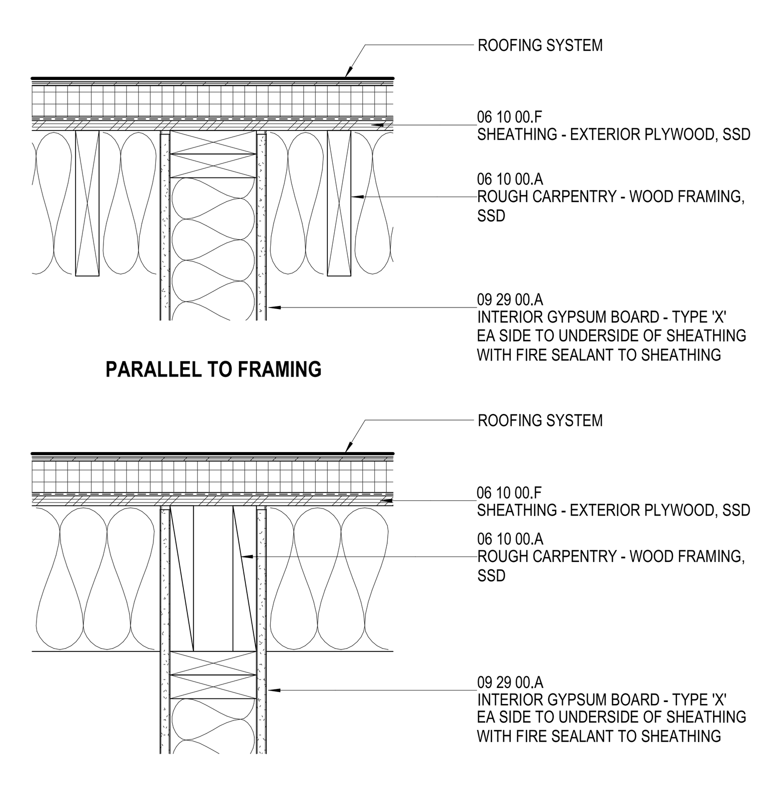

12 FIRE BARRIER AT ROOF FRAMING
1 1/2" = 1'-0"

A. REFER TO TITLE SHEET FOR APPLICABLE CODES AND REFERENCED STANDARDS.
B. REFER TO STRUCTURAL DRAWINGS FOR ADDITIONAL REQUIREMENTS.
C. EXTENT OF INTERIOR PARTITION TYPES ARE KEYED ON FLOOR PLANS.
D. PROVIDE CONTINUOUS FIRE RATED PARTITIONS/BARRIERS/WALLS FROM FLOOR SLAB TO UNDERSIDE OF STRUCTURAL FRAMING OR SLAB ABOVE, UON.
E. WHERE INTERIOR PARTITIONS/BARRIERS/WALLS TERMINATE AT EXTERIOR WALLS, MAINTAIN FIRE RATING TO THE EXTERNAL FACE OF THE EXTERIOR WALL.
F. FURRED COLUMN CLOSURES SHALL NOT BE CONSIDERED PART OF THE FIRE RATED ASSEMBLY OF THE COLUMN, UON.
G. WHERE INTERIOR PARTITION ASSEMBLIES PROVIDE AN UNDERWRITERS LABORATORIES (UL) DESIGN NUMBER, USE THE MATERIALS, METHODS AND SYSTEMS DESCRIBED IN THE UL APPROVED DESIGN WITHOUT SUBSTITUTION. DO NOT USE GENERIC MATERIALS OR ASSUME GENERIC MATERIALS TO BE EQUIVALENT. WHERE UL APPROVED DESIGNS LIST SEVERAL ALTERNATIVE PRODUCTS, ANY OF THE PRODUCTS LISTED MAY BE USED.
H. WHERE INTERIOR PARTITION ASSEMBLIES PROVIDE A PROPRIETARY GYPSUM ASSOCIATION (GA) FIRE RESISTANCE DESIGN MANUAL NUMBER, USE THE MATERIALS, METHODS AND SYSTEMS DESCRIBED IN THE GA APPROVED DESIGN WITHOUT SUBSTITUTION. DO NOT USE GENERIC MATERIALS OR ASSUME GENERIC MATERIALS TO BE EQUIVALENT FOR PROPRIETARY DESIGNS. WHERE PROPRIETARY GA APPROVED DESIGNS LIST SEVERAL ALTERNATIVE PRODUCTS, ANY OF THE PRODUCTS LISTED MAY BE USED. WHERE GA APPROVED DESIGNS ARE CLASSIFIED AS GENERIC, EQUIVALENT PRODUCTS MAY BE USED UPON APPROVAL BY THE ARCHITECT.
I. WHERE ITEMS PENETRATE FIRE RESISTIVE MEMBRANES AND FIRE RATED PARTITIONS/BARRIERS/WALLS, PROVIDED THROUGH PENETRATION FIRE STOPPING SYSTEMS WITH TIME RATINGS EQUIVALENT TO THE FIRE RATING OF THE PARTITION/BARRIER/WALL PENETRATED, AND WITH 'F' RATING EQUAL TO, OR GREATER THAN, THE FIRE RATING OF THE PARTITION/BARRIER/WALL PENETRATED.
J. SEPARATE OUTLET BOXES LOCATED ON OPPOSITE SIDES OF INTERIOR PARTITIONS BY A MINIMUM OF 24 INCHES.
K. PROVIDE MEMBRANE FIRE STOPPING PROTECTION AT OUTLET BOXES IN FIRE RATED PARTITIONS/BARRIERS/WALLS WHEN 1) AN OUTLET BOX EXCEEDS 16 SQUARE INCHES IN AREA, OR 2) THE TOTAL AREA OF THE OUTLET BOXES EXCEEDS 100 SQUARE INCHES WITHIN 100 SQUARE FEET OF INTERIOR PARTITION AREA.
L. COORDINATE LOCATIONS OF BUILDING SYSTEMS, INFRASTRUCTURE AND OPENINGS TO MINIMIZE IMPACT ON INTERIOR PARTITION FRAMING. PROVIDE SUPPLEMENTAL FRAMING/BRIDGING/MODIFICATIONS REQUIRED FOR COORDINATION WITH SYSTEMS, INFRASTRUCTURE AND OPENINGS, AS APPROVED BY THE ARCHITECT.
M. COORDINATE LOCATIONS AND EXTENTS OF CONCEALED BACKING TO SUPPORT BUILDING SYSTEMS, INFRASTRUCTURE, EQUIPMENT AND FURNISHINGS. PROVIDE SUPPLEMENTAL FRAMING WHERE REQUIRED TO SUPPORT CONCEALED BACKING.
N. INSTALL FRAMING COMPONENTS AND GYPSUM BOARD SQUARELY CUT TO FIT TIGHTLY AGAINST ABUTTING ELEMENT. FIT GYPSUM BOARD TIGHTLY AROUND STRUCTURAL SHAPES, DUCTS, PIPES, CONDUITS AND FITTINGS. SEAL ALL GAPS WITH ACOUSTICAL SEALANT AT NON-RATED PARTITIONS, AND FIRE STOP SYSTEMS AT RATED PARTITIONS.
O. ATTACH STUDS AND TRACKS BY WELDING, OR SHEET METAL SCREWS, AS INDICATED ON THE DRAWINGS.
P. SPLICES IN STUDS AND BRACES ARE NOT PERMITTED.
Q. INSTALL CONTINUOUS FRAMING AND BLOCKING TO FULLY SUPPORT EDGES OF GYPSUM BOARD.
R. INSTALL SOUND ATTENUATION ACOUSTICAL BATTS IN ACOUSTICAL PARTITIONS FULL HEIGHT OF GYPSUM WALLBOARD, UON.
S. ACOUSTICAL SEALANT MAY BE USED IN INTERIOR PARTITIONS THAT ARE NOT FIRE RATED.

6 GENERAL INTERIOR PARTITION NOTES
12" = 1'-0"

1. FOR ADDITIONAL REQUIREMENTS REFER TO "GENERAL INTERIOR PARTITION NOTES" ON THIS DRAWING.
2. REFER TO THE "INTERIOR PARTITION LEGEND" ON THIS DRAWING FOR KEY SYMBOLS, STUD WIDTH, FIRE RATING, AND ADDITIONAL INFORMATION.
3. REFER TO STRUCTURAL DRAWINGS FOR RAISED CURB LOCATIONS.
4. INSTALL 5/8" TYPE 'X' GYP BD THROUGHOUT, UON.
5. INSTALL 5/8" MOLD/MILDEW/MOISTURE RESISTANT TYPE 'X' GYP BD WITHIN 5 FEET OF PLUMBING FIXTURES.
6. INSTALL 5/8" MOLD/MILDEW/MOISTURE RESISTANT TYPE 'X' GYP BD IN LIEU OF STANDARD GYP BD BELOW CERAMIC TILE AT DRY LOCATIONS.
7. INSTALL 5/8" CEMENTITIOUS BACKER BOARD BELOW CERAMIC TILE @ WET LOCATIONS.
8. INSTALL SOUND ATTENUATION BLANKET INSULATION AT ALL INTERIOR PARTITIONS, UON.
9. ATTACH INTERIOR PARTITION HEAD TO STRUCTURE PER STRUCTURAL DRAWINGS.
10. ATTACH INTERIOR PARTITION SILL TO STRUCTURE PER STRUCTURAL DRAWINGS.
11. PROVIDE SOLID WOOD BLOCK BACKING SUPPORTS WHERE REQUIRED FOR ATTACHMENTS PER **9/A-561**, TYP.
12. INSTALL FIRE RATED PARTITION INTERSECTIONS WITH NON RATED PARTITIONS PER **11/A-521**
13. UON, PROVIDE DOOR OFFSETS @ PERPENDICULAR PARTITIONS PER **3/A-541**
14. PROVIDE ACCESSIBLE CLEARANCES AT DOORS AND OPENINGS PER **2/A-511** REQUEST DIRECTION FROM ARCHITECT WHEN DIMENSIONS ON PLANS CONFLICT WITH ACCESSIBLE CLEARANCES.
15. ALIGN FACE OF INTERIOR FINISHES WHEN CONSTRUCTION INVOLVES MORE THAN ONE FINISH AT CONTINUOUS WALL SURFACES, UON.

7 INTERIOR PARTITION NOTES
12" = 1'-0"

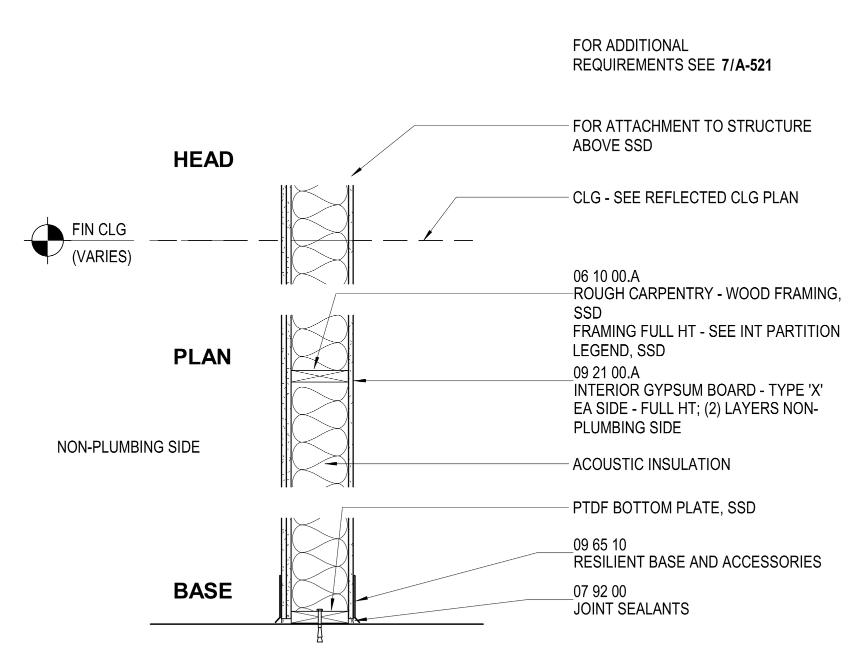

8 PARTITION TYPE B
3/4" = 1'-0" — NON RATED

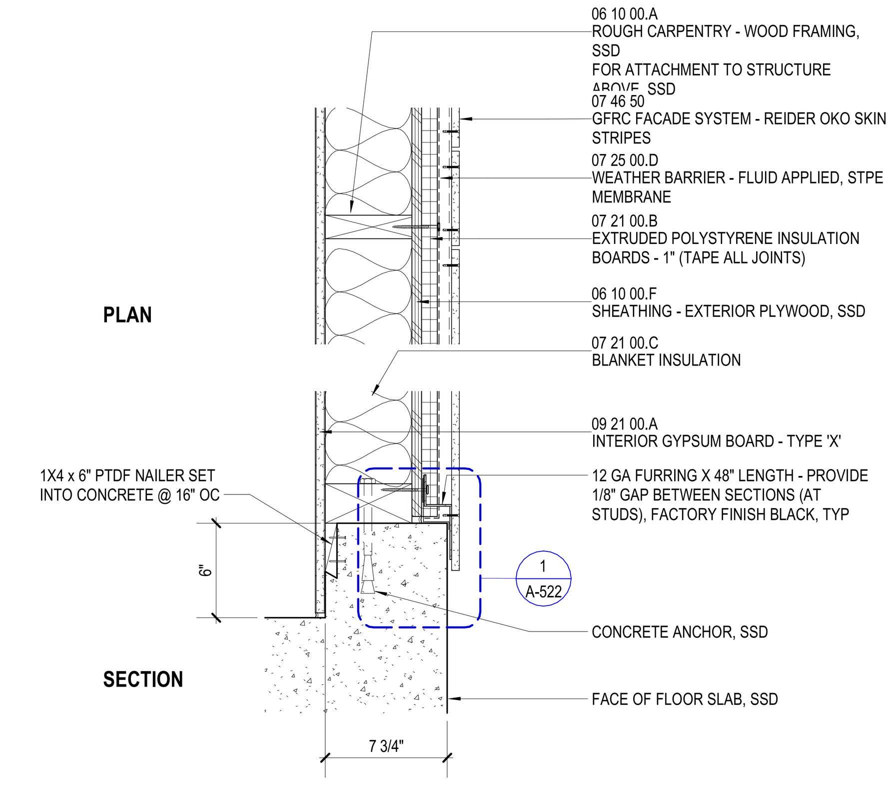

1 WALL TYPE XA - CEMENT FIBER BOARD RAINSCREEN
1 1/2" = 1'-0" — NON-RATED

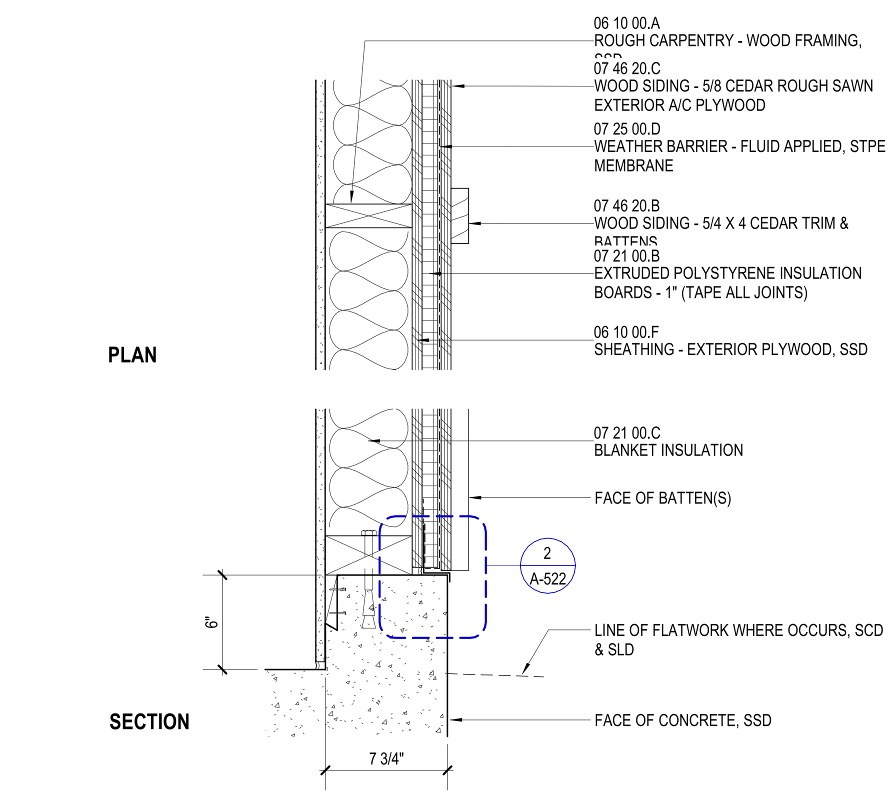

2 WALL TYPE XB - BOARD AND BATTEN
1 1/2" = 1'-0" — NON-RATED

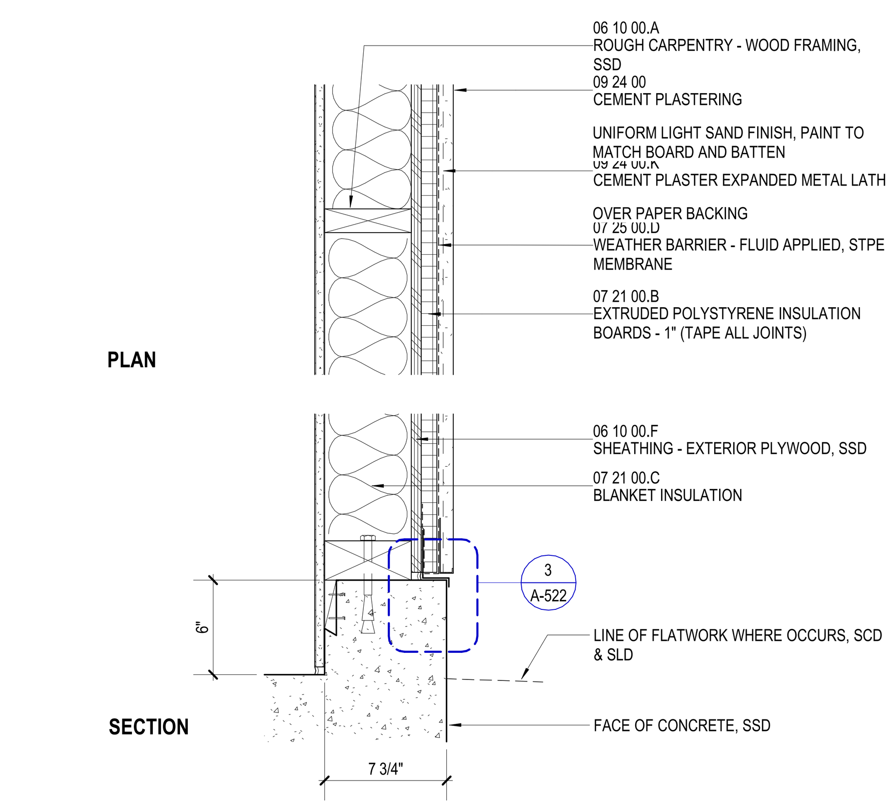

3 WALL TYPE XC - CEMENT PLASTER
1 1/2" = 1'-0" — NON-RATED

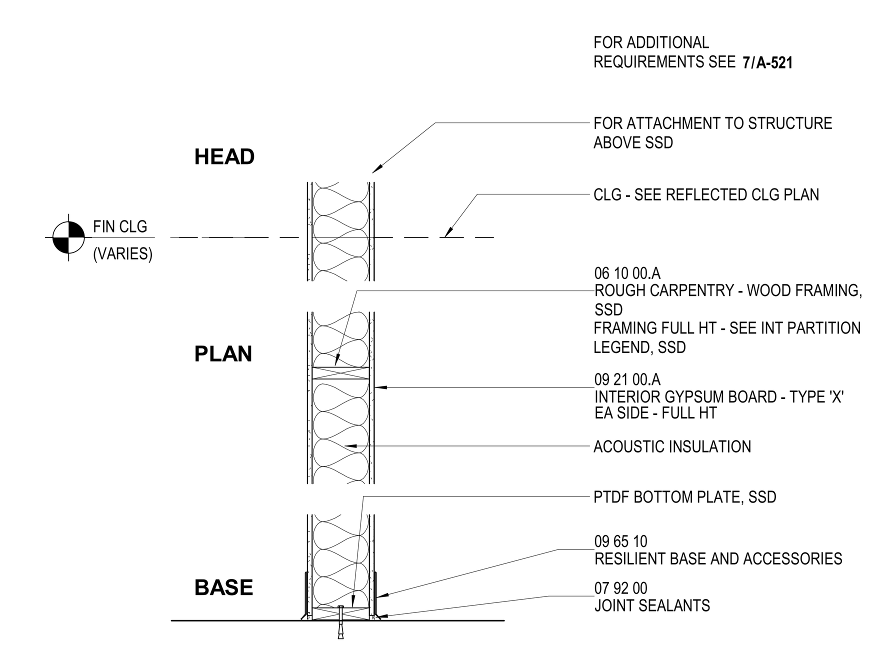

4 PARTITION TYPE A
3/4" = 1'-0" — NON RATED

AGENCY APPROVAL STAMP:

IDENTIFICATION STAMP
DIV. OF THE STATE ARCHITECT
APP: 01-120890 INC:
REVIEWED FOR
SS ☑ FLS ☑ ACS ☑
DATE: 10/25/2023

TLCDARCHITECTURE
520 Third St. #250
Santa Rosa, CA 95401
o: 707.525.5600
f: 707.525.5616
tlcd.com

CONSULTANT:

STAMP:

LICENSED ARCHITECT
CARL SERVAIS
C-32941
REN:12/31/23
STATE OF CALIFORNIA

REVISIONS:

Number	Date	Description

NAPA VALLEY COLLEGE WINE EDUCATION CENTER

2277 NAPA VALLEJO HWY
NAPA, CA 94558

NAPA VALLEY COLLEGE

DSA APPLICATION NUMBER:
01-120890

TLCD PROJECT NUMBER:
21062.00

DATE:
04/12/2023

DETAILS - WALLS AND PARTITIONS

A-521

© THESE DRAWINGS ARE INSTRUMENTS OF SERVICE AND ARE THE SOLE PROPERTY OF TLCD ARCHITECTURE. ANY USE WITHOUT WRITTEN CONSENT IS PROHIBITED.

10/4/2023 7:55:23 AM

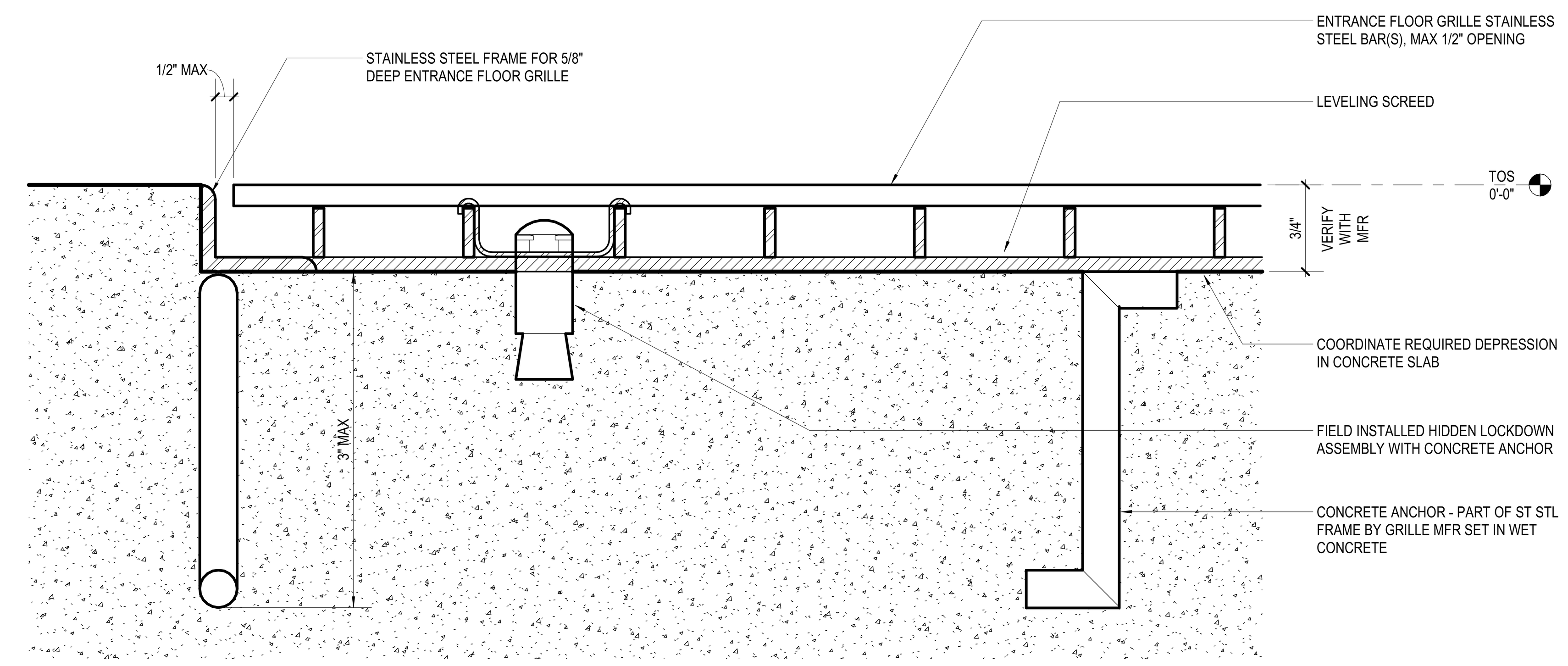

17 **ENTRANCE FLOOR GRILLE**
12" = 1'-0"
A-121

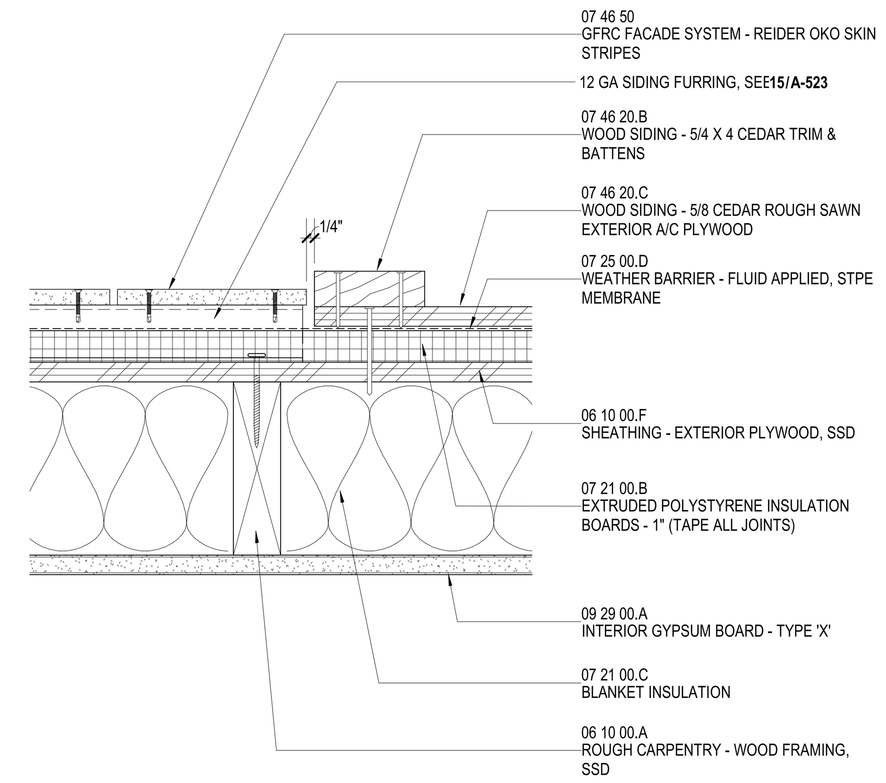

9 **CEMENT FIBER PANEL AT BATTEN WALL TRANSITION**
3" = 1'-0"
A-201

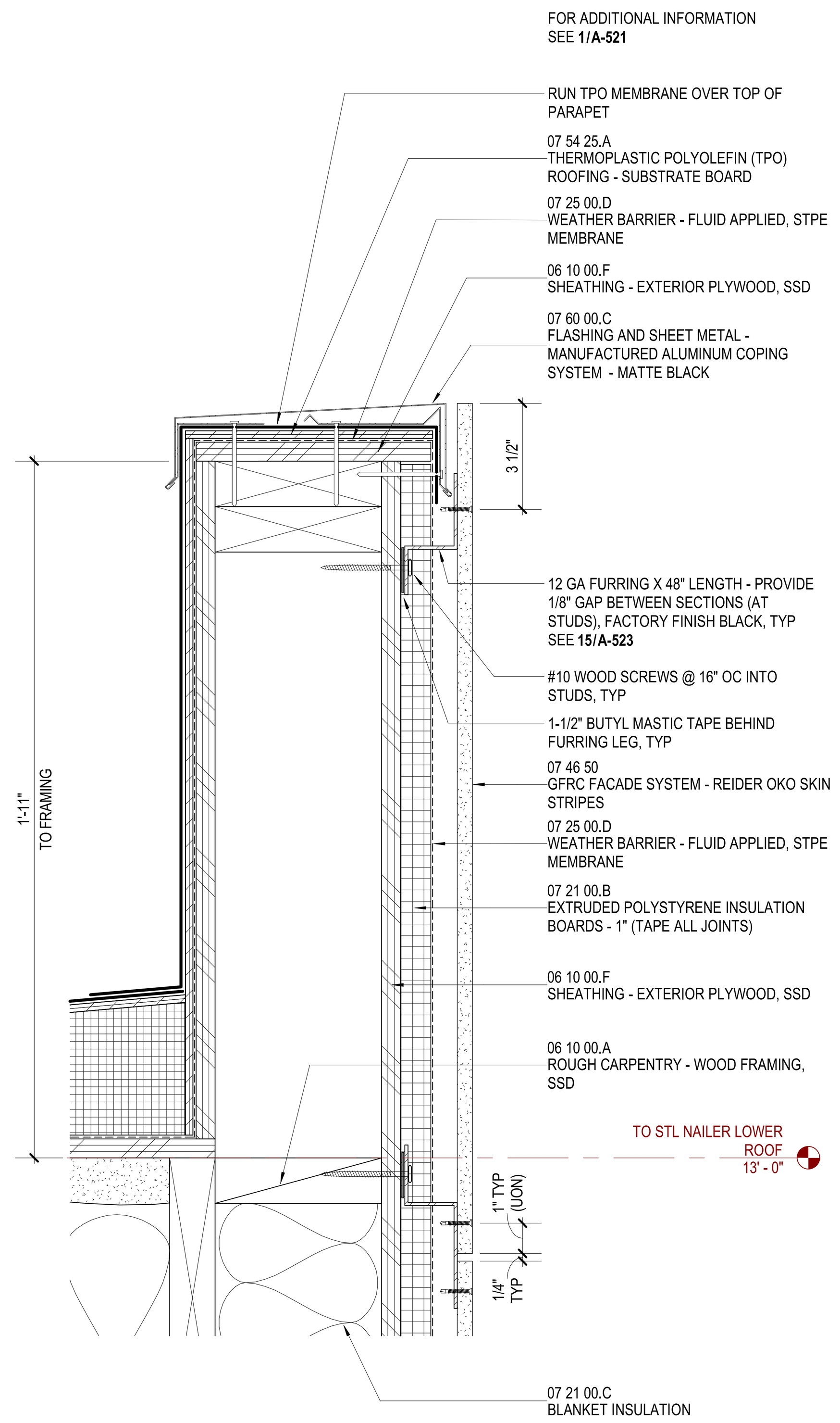

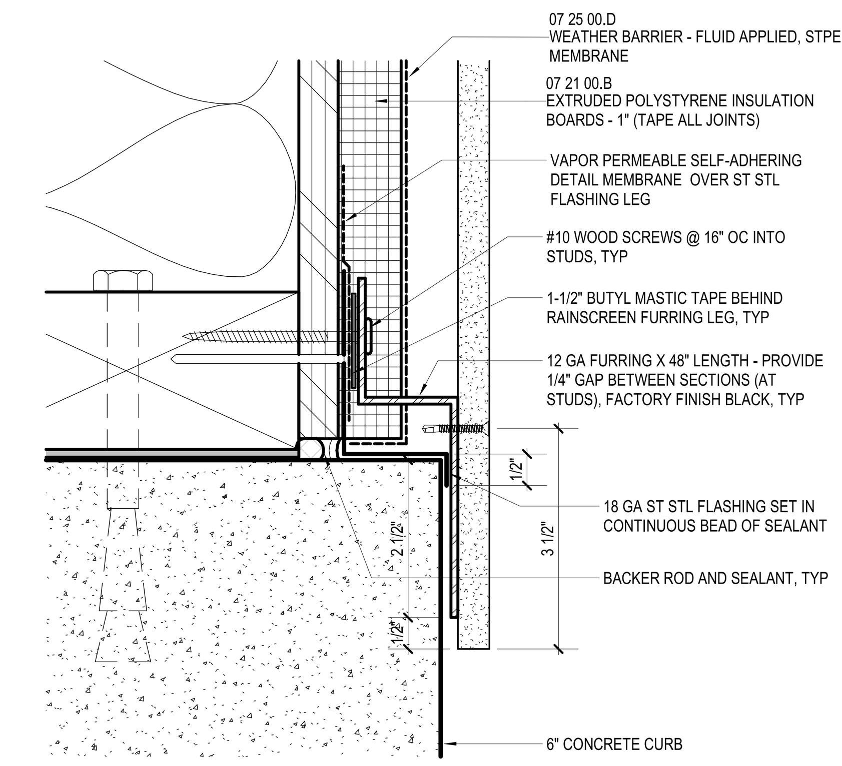

1 **BASE AT WALL TYPE XA**
6" = 1'-0"
A-521

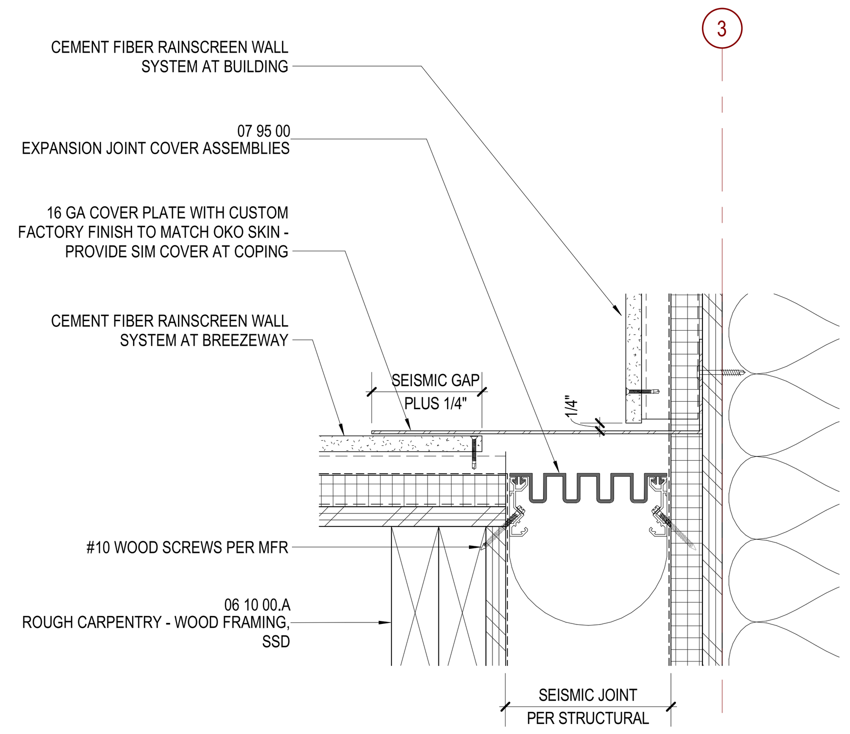

18 **EXPANSION JOINT AT BREEZEWAY WALL**
3" = 1'-0"
A-122

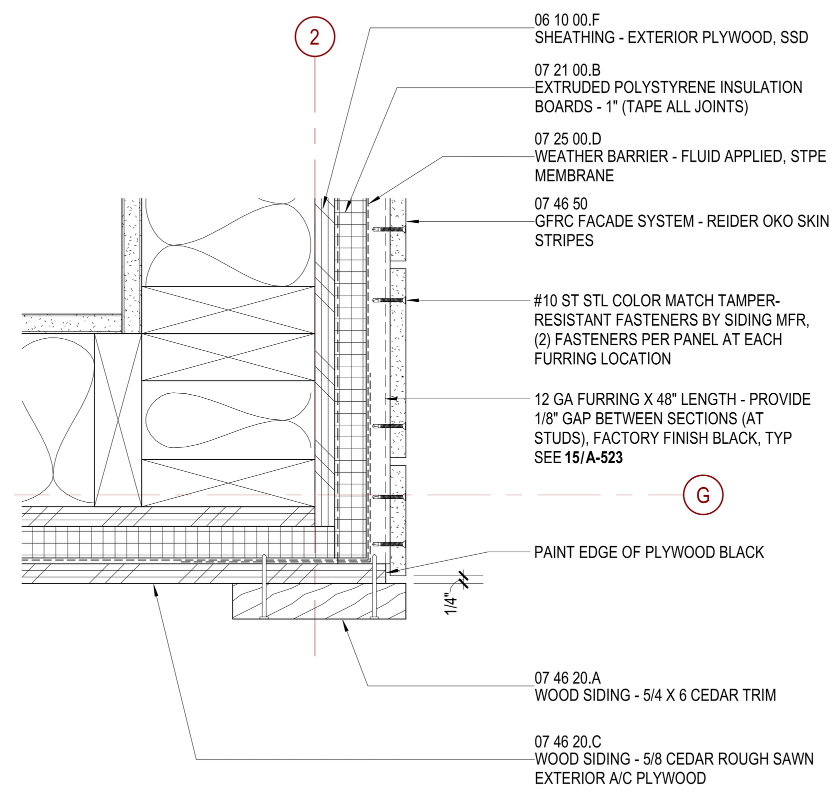

14 **OUTSIDE CORNER - BOARD & BATTEN @ CEMENT FIBER**
3" = 1'-0"
A-122

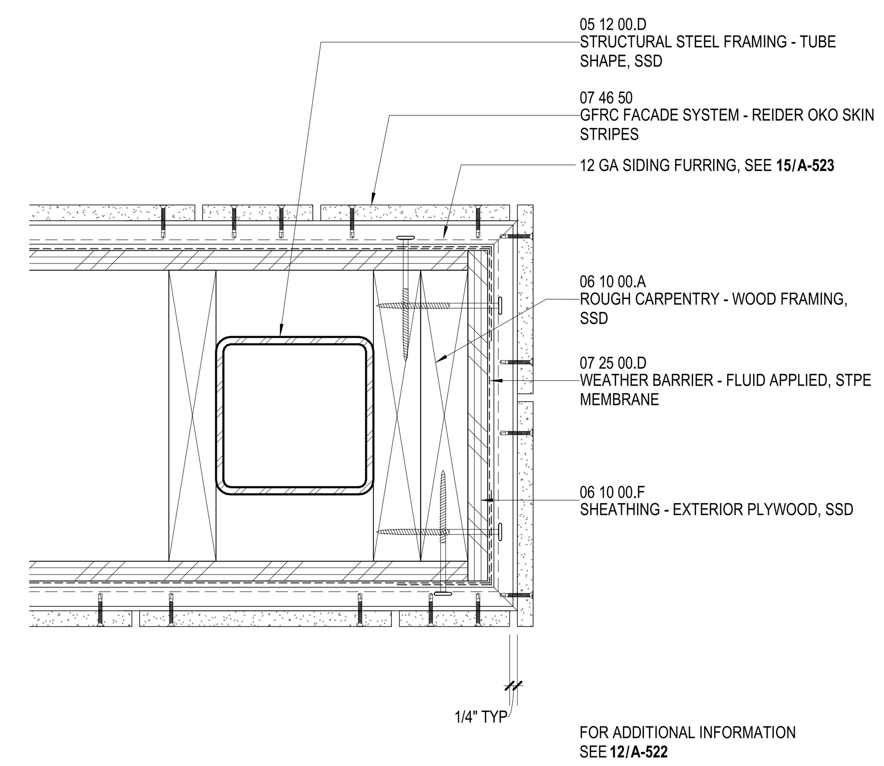

10 **CEMENT FIBER PANEL END WALL**
3" = 1'-0"
A-122

6 **COPING AT CEMENT FIBER RAINSCREEN**
3" = 1'-0"
A-201

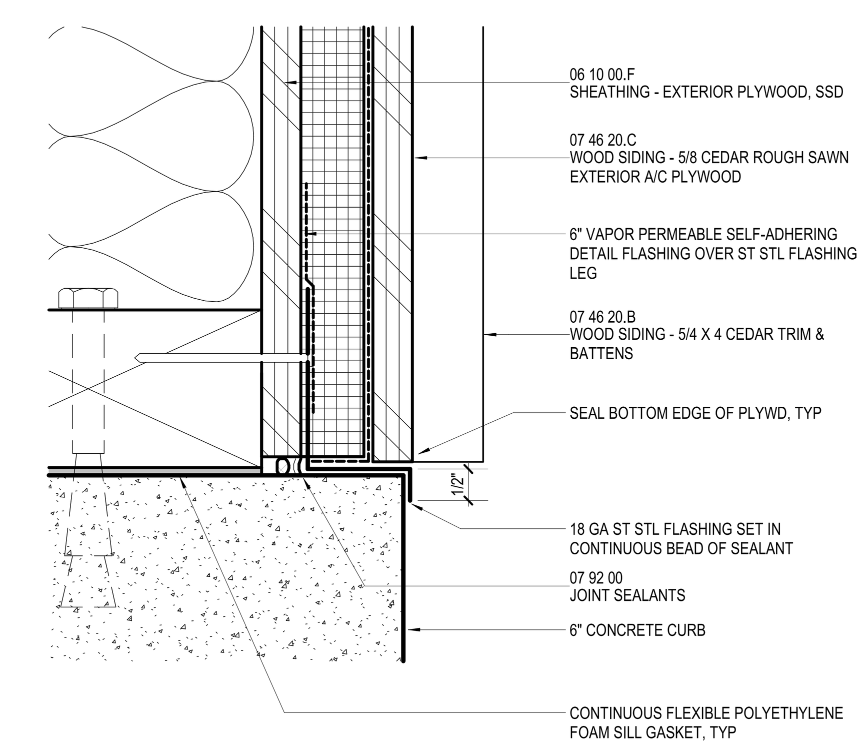

2 **BASE AT WALL TYPE XB**
6" = 1'-0"
A-521

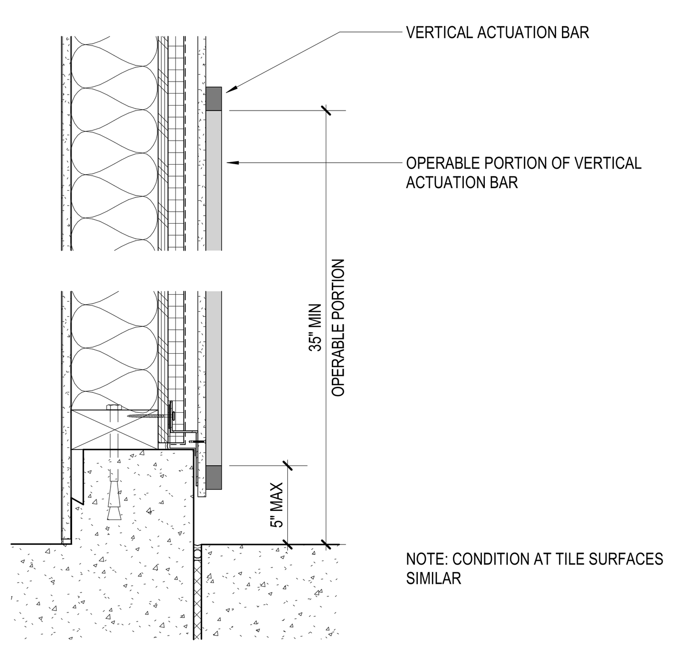

19 **VERTICAL DOOR ACTUATOR**
1 1/2" = 1'-0"

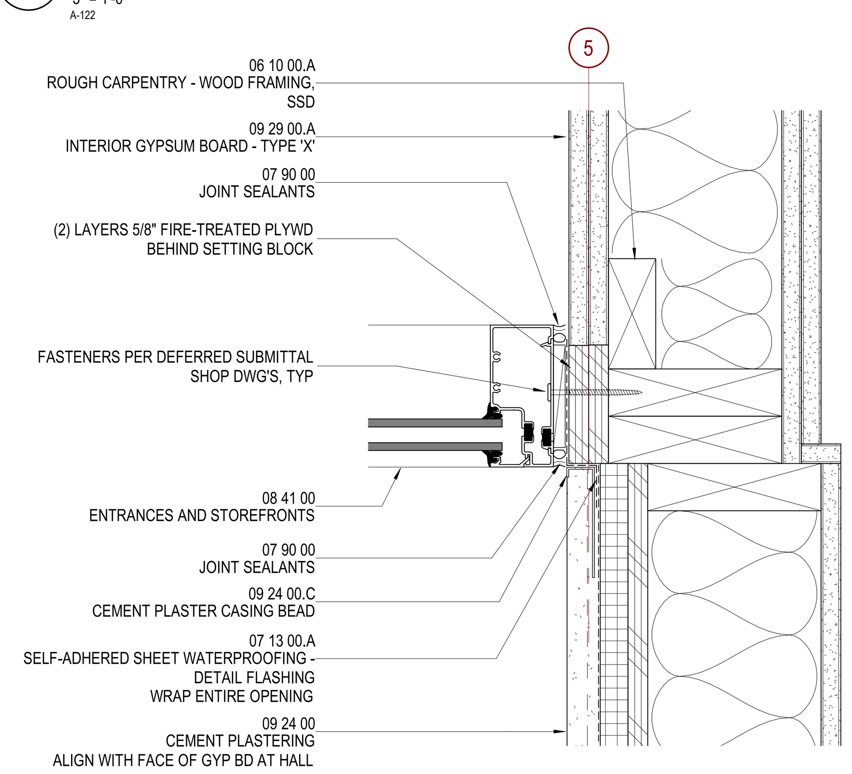

15 **JAMB AT STOREFRONT TYPE C**
3" = 1'-0"
A-121

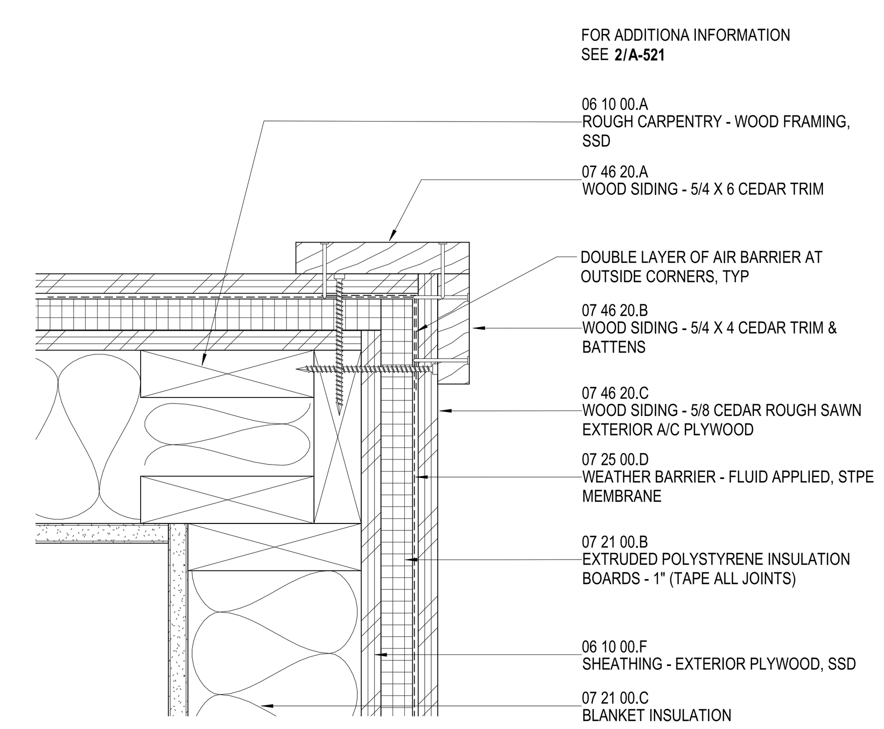

11 **BOARD AND BATTEN OUTSIDE CORNER**
3" = 1'-0"
A-201

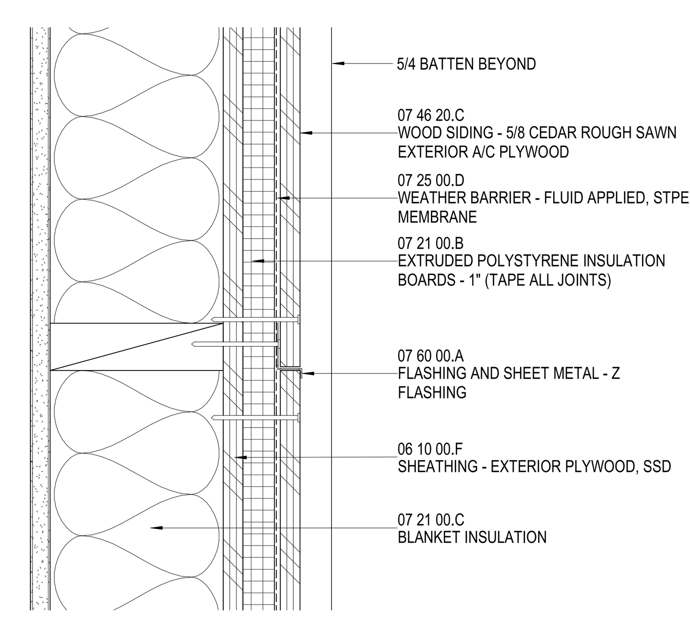

7 **PLYWOOD SIDING HORIZONTAL JOINT**
3" = 1'-0"

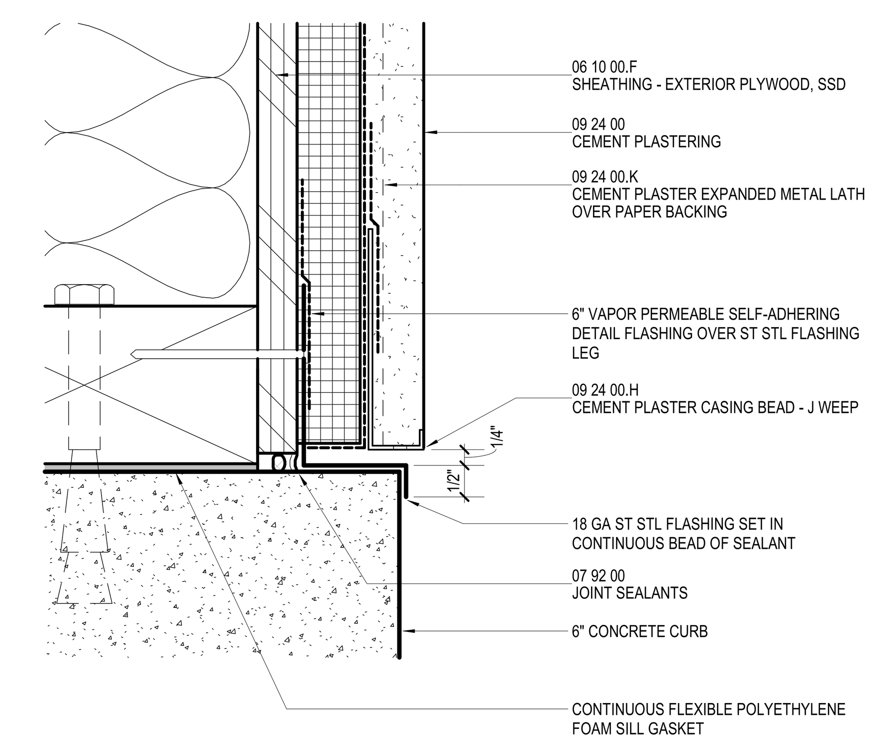

3 **BASE AT WALL TYPE XC**
6" = 1'-0"
A-521

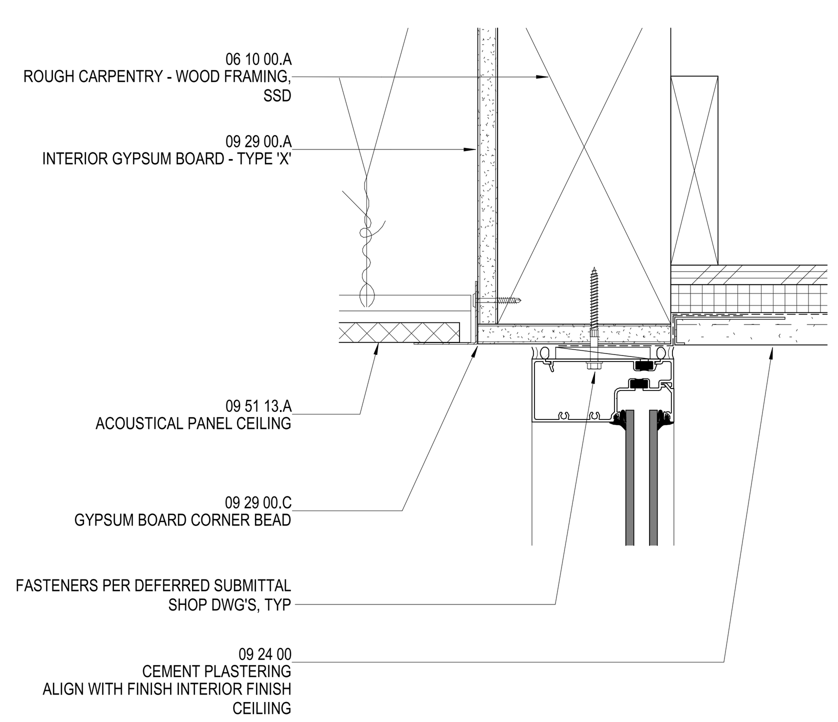

FOR ADDITIONA INFORMATION SEE 15/A-522

16 **HEAD AT STOREFRONT TYPE C**
3" = 1'-0"
A-201

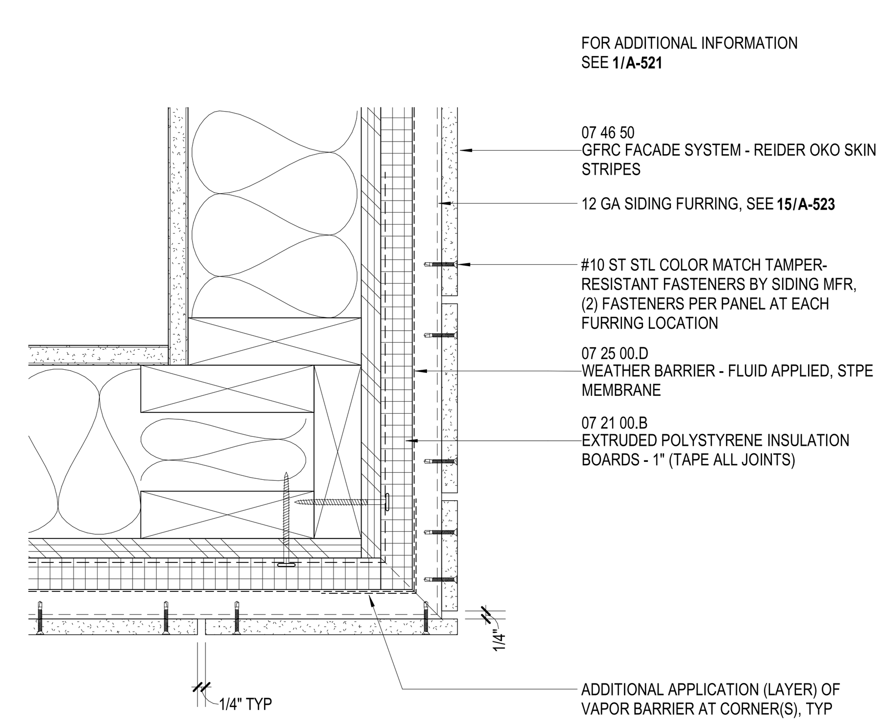

12 **CEMENT FIBER PLANK OUTSIDE CORNER**
3" = 1'-0"

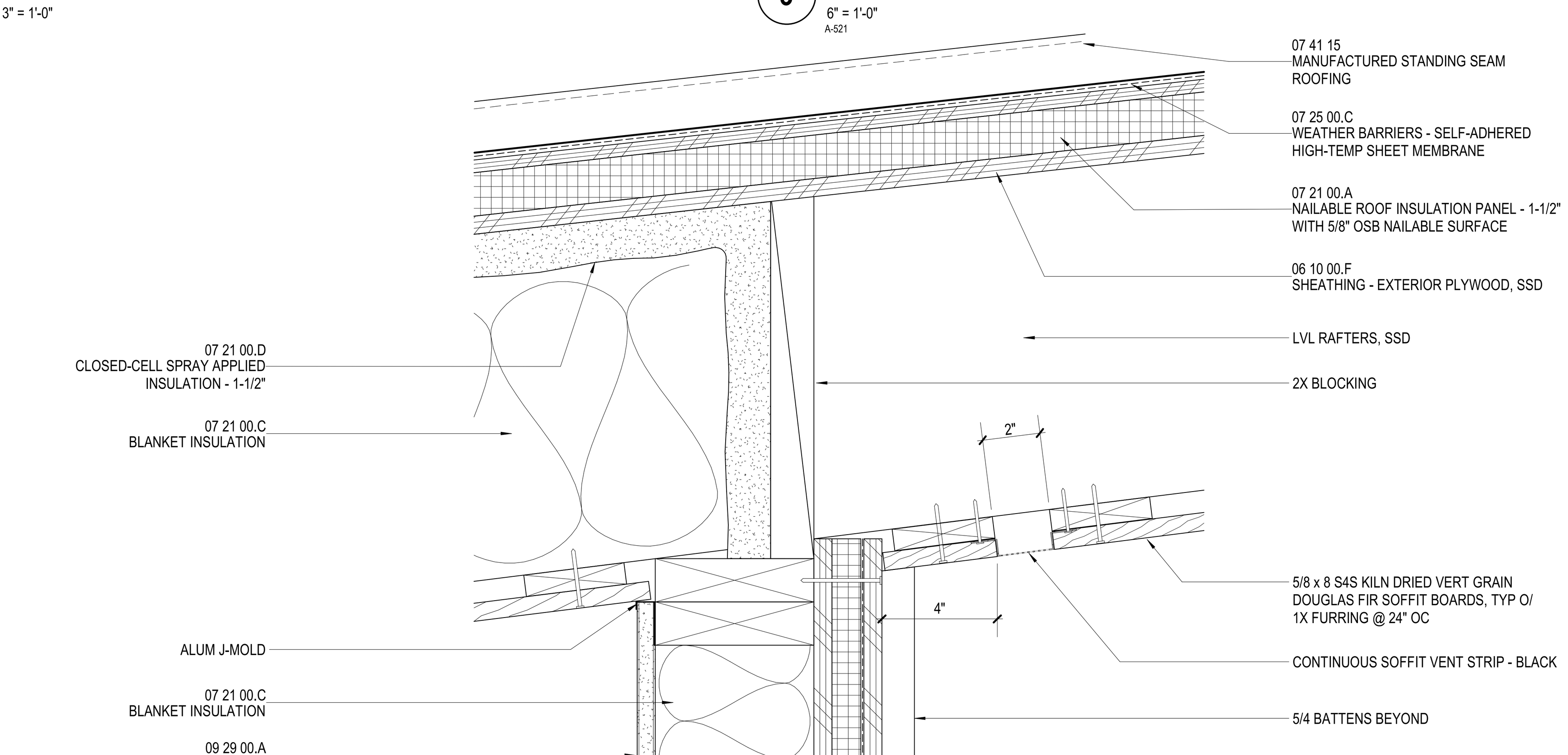

8 **TOP OF WALL AT OVERHANG**
3" = 1'-0"
A-201

10/4/2023 7:55:26 AM

AGENCY APPROVAL STAMP:

IDENTIFICATION STAMP
DIV. OF THE STATE ARCHITECT
APP: 01-120890 INC:
REVIEWED FOR
SS ☑ FLS ☑ ACS ☑
DATE: 10/25/2023

TLCDARCHITECTURE
520 Third St. #250
Santa Rosa, CA 95401
o: 707.525.5600
f: 707.525.5616
tlcd.com

CONSULTANT:

STAMP:

LICENSED ARCHITECT
CARL SERVAIS
C-32941
REN:12/31/23
STATE OF CALIFORNIA

REVISIONS:

Number	Date	Description

NAPA VALLEY COLLEGE WINE EDUCATION CENTER
2277 NAPA VALLEJO HWY
NAPA, CA 94558

NAPA VALLEY COLLEGE

DSA APPLICATION NUMBER:
01-120890

TLCD PROJECT NUMBER:
21062.00

DATE:
04/12/2023

DETAILS - EXTERIOR

A-522

© THESE DRAWINGS ARE INSTRUMENTS OF SERVICE AND ARE THE SOLE PROPERTY OF TLCD ARCHITECTURE. ANY USE WITHOUT WRITTEN CONSENT IS PROHIBITED.

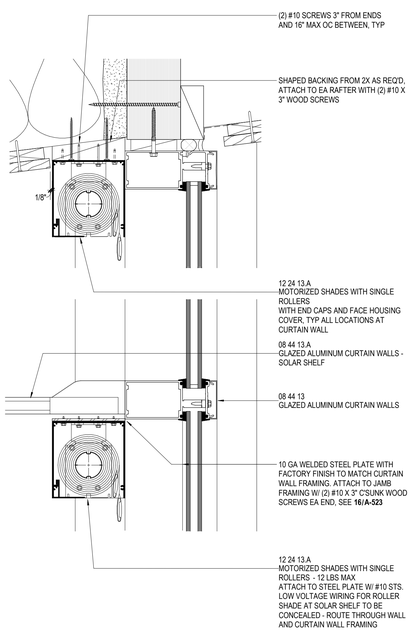

18 ROLLER SHADES AT CURTAIN WALL

3" = 1'-0"
A-171

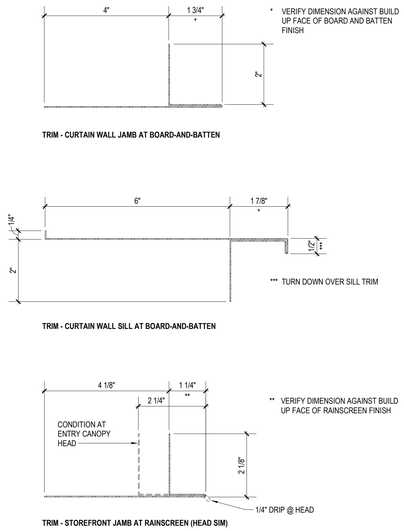

14 METAL TRIM PROFILES

6" = 1'-0"

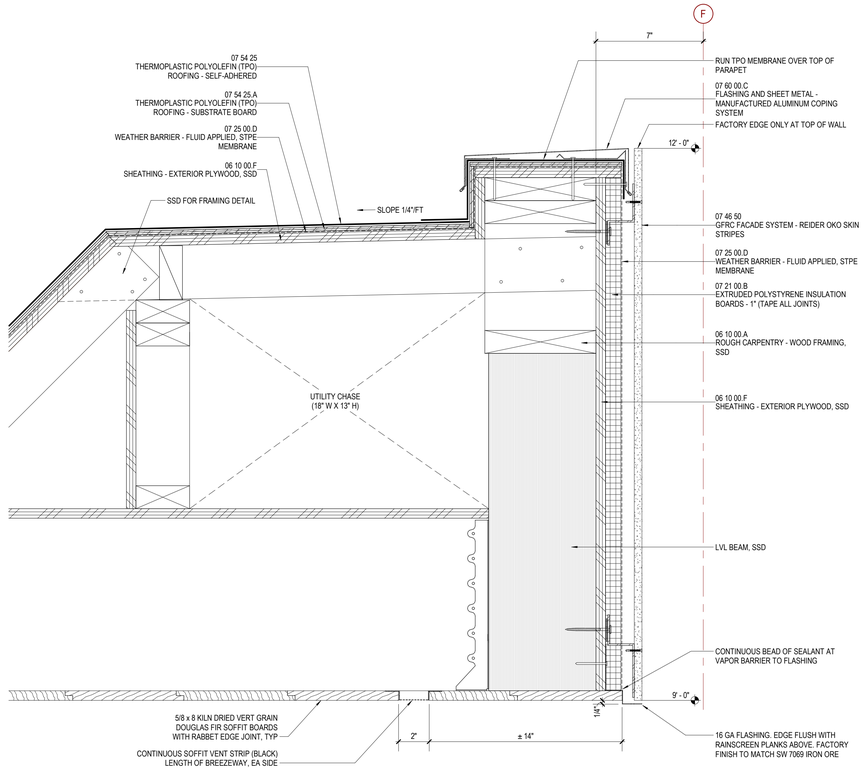

10 UTILITY CHASE AT BREEZEWAY ROOF

3" = 1'-0"
A-122

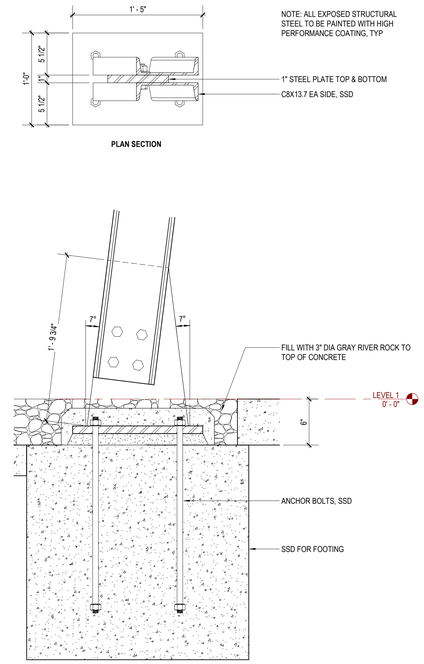

2 ENTRY CANOPY STEEL COLUMN BASE

1 1/2" = 1'-0"
A-201

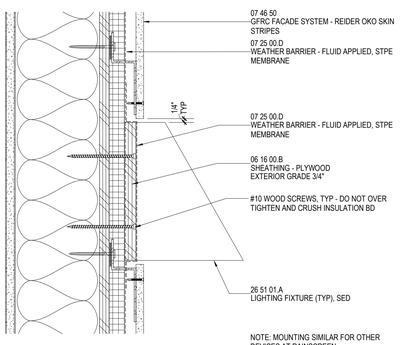

19 LIGHT FIXTURE MOUNTING AT RAINSCREEN

3" = 1'-0"
A-201

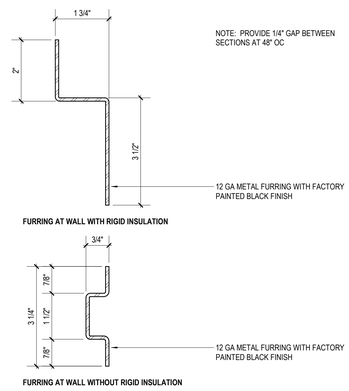

15 RAINSCREEN FURRING

6" = 1'-0"

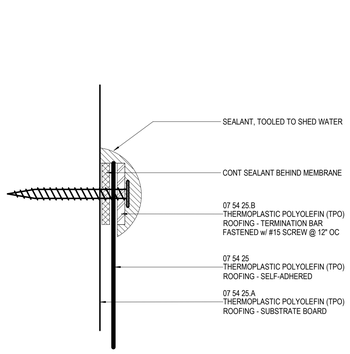

11 TERMINATION BAR, TYP

12" = 1'-0"

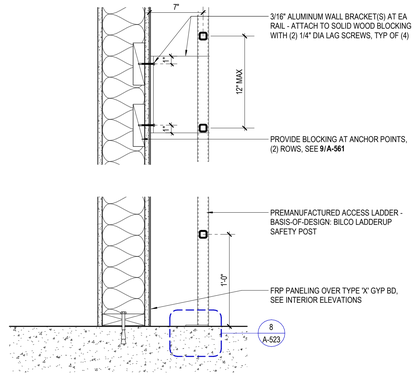

7 ACCESS LADDER

1 1/2" = 1'-0"

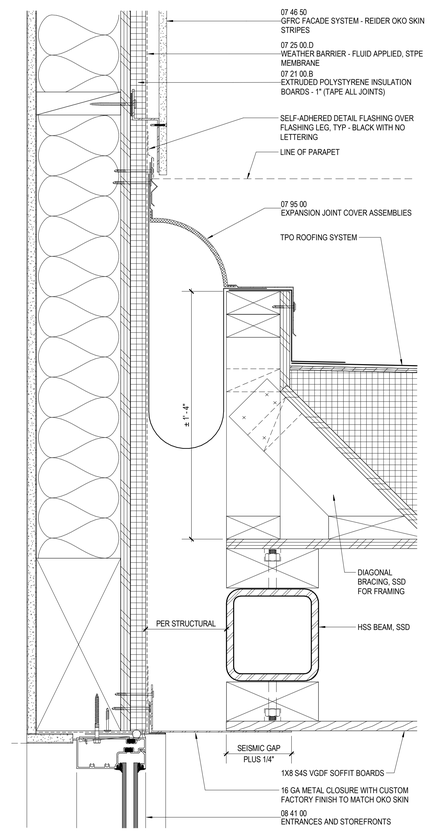

4 SEISMIC JOINT

3" = 1'-0"
A-122

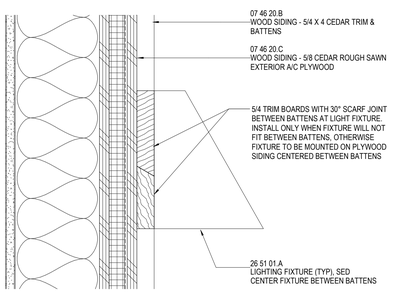

20 LIGHT FIXTURE MOUNTING AT BOARD & BATTEN

3" = 1'-0"

AT BATTEN SPACING LESS THAN 16"

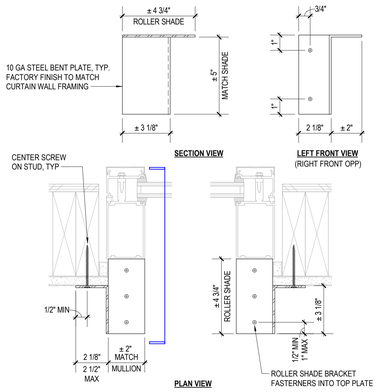

16 ROLLER SHADE MOUNTING PLATE

3" = 1'-0"

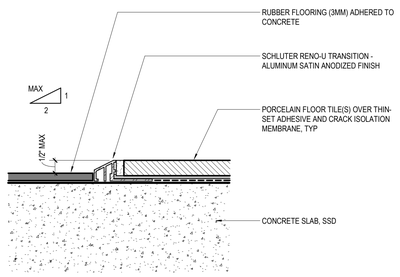

12 TRANSITION AT TILE TO RESILIENT FLOORING

12" = 1'-0"

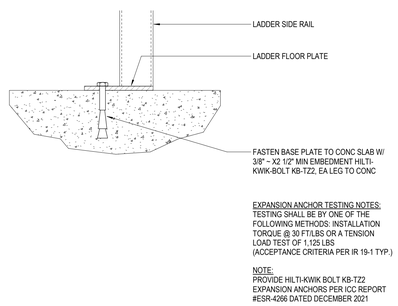

8 ACCESS LADDER FLOOR MOUNT

3" = 1'-0"
A-523

AGENCY APPROVAL STAMP:

IDENTIFICATION STAMP
DIV. OF THE STATE ARCHITECT
APP: 01-120890 INC:
REVIEWED FOR
SS ☑ FLS ☑ ACS ☑
DATE: 10/25/2023

TLCDARCHITECTURE
520 Third St. #250
Santa Rosa, CA 95401
o: 707.525.5600
f: 707.525.5616
tlcd.com

CONSULTANT:

STAMP:

LICENSED ARCHITECT
GRAIL SERTAIN
C-32357
REN:12/31/23
STATE OF CALIFORNIA

REVISIONS:

Number	Date	Description

NAPA VALLEY COLLEGE WINE EDUCATION CENTER

2277 NAPA VALLEJO HWY
NAPA, CA 94558

NAPA VALLEY COLLEGE

DSA APPLICATION NUMBER:
01-120890

TLCD PROJECT NUMBER:
21062.00

DATE:
04/12/2023

DETAILS - MISC

A-523

© THESE DRAWINGS ARE INSTRUMENTS OF SERVICE AND ARE THE SOLE PROPERTY OF TLCD ARCHITECTURE. ANY USE WITHOUT WRITTEN CONSENT IS PROHIBITED.

10/4/2023 7:55:28 AM

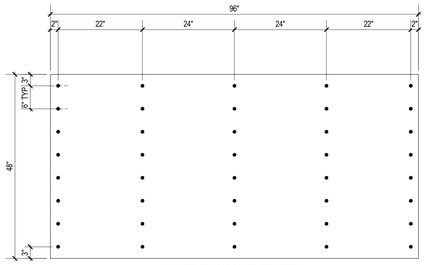

40 FASTENERS PER BOARD (PERIMETER)
(4' x 8')

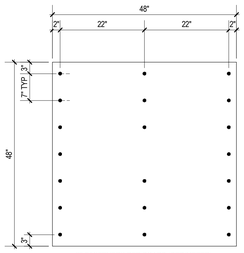

20 FASTENERS PER BOARD (PERIMETER)
(4' x 4')

18 NAILABLE BASE INSUL FASTENING PATTERN (PERIMETER)
3/4" = 1'-0"

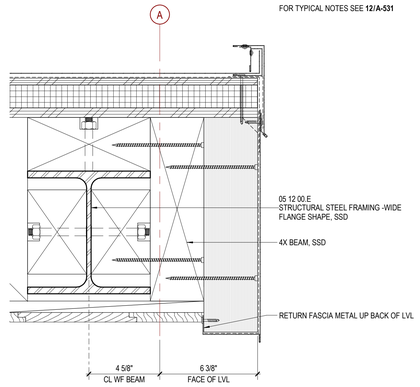

13 ROOF RAKE AT WF BEAM
3" = 1'-0"
A-008

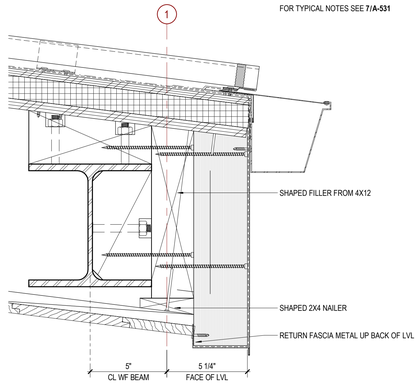

14 ROOF EAVE AT WF BEAM
3" = 1'-0"
A-007

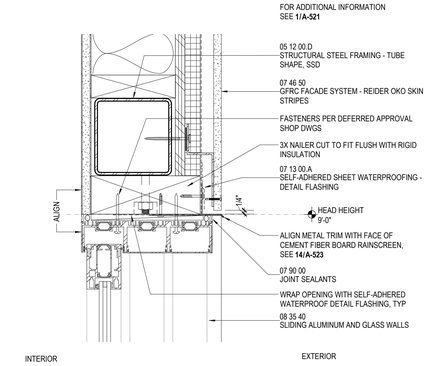

9 SLIDING WALL 3-TRACK AT HEAD
3" = 1'-0"
A-401

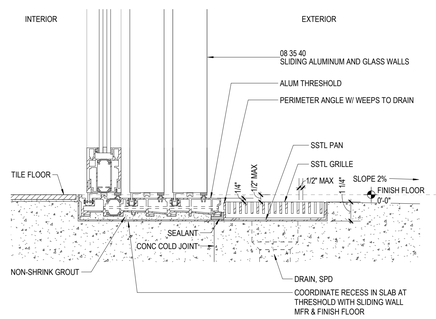

10 SLIDING WALL 3-TRACK AT THRESHOLD
3" = 1'-0"
A-401

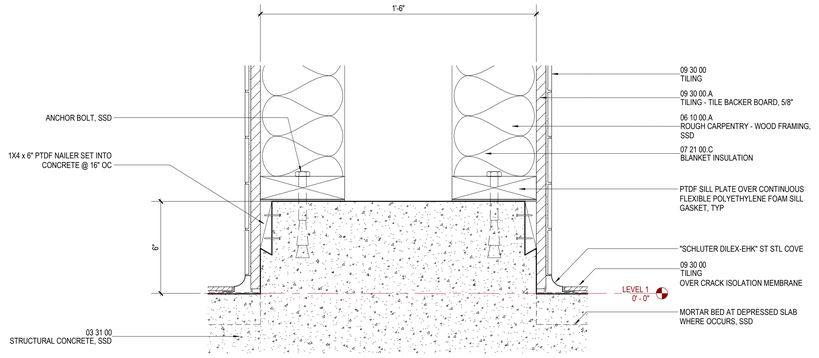

5 PLUMBING CHASE
3" = 1'-0"
A-402

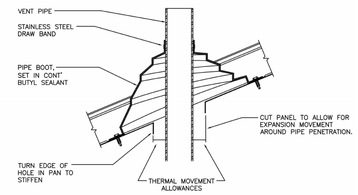

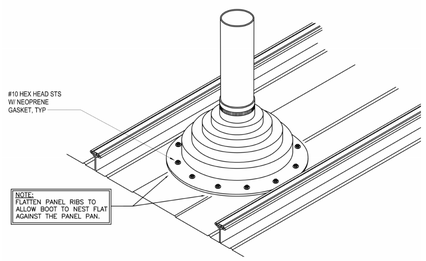

7 PIPE PENETRATION AT METAL ROOF
12" = 1'-0"

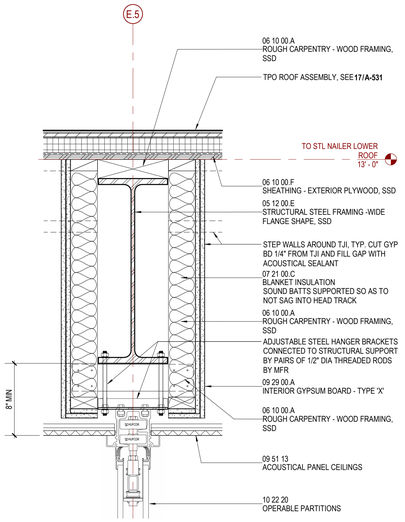

3 HEAD AT OPERABLE PARTITION
1 1/2" = 1'-0"
A-171

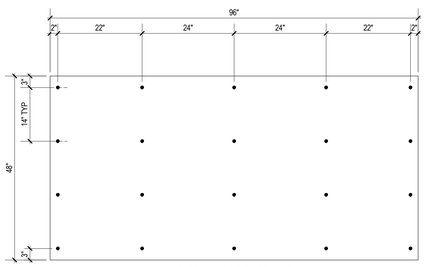

20 FASTENERS PER BOARD (FIELD)
(4' x 8')

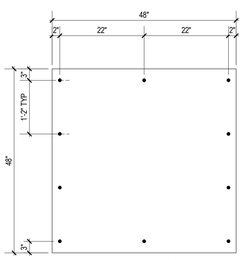

10 FASTENERS PER BOARD (FIELD)
(4' x 4')

20 NAILABLE BASE INSULATION FASTENING PATTERN (FIELD)
3/4" = 1'-0"

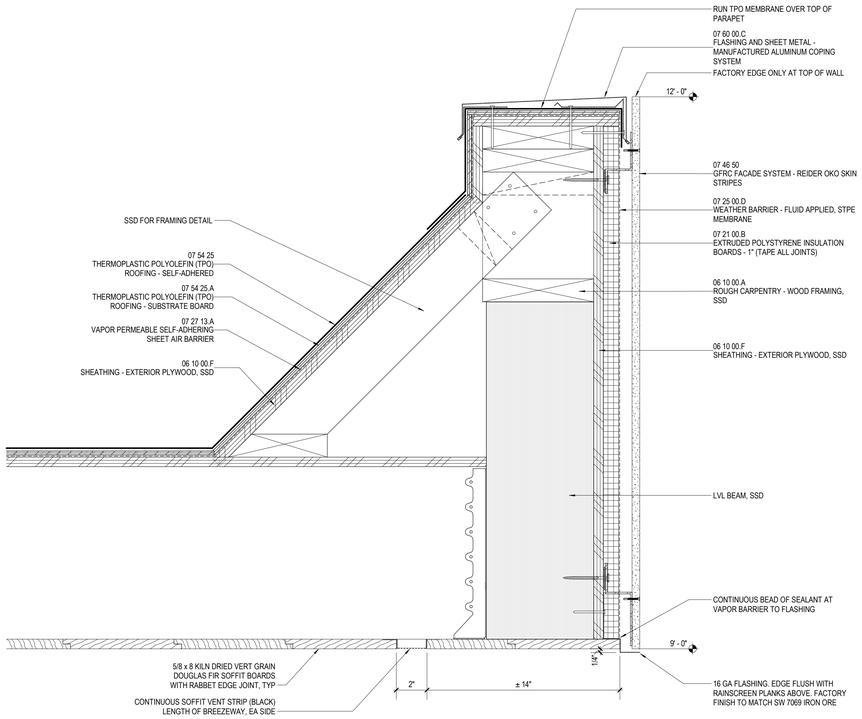

16 PARAPET BREEZEWAY ROOF
3" = 1'-0"
A-122

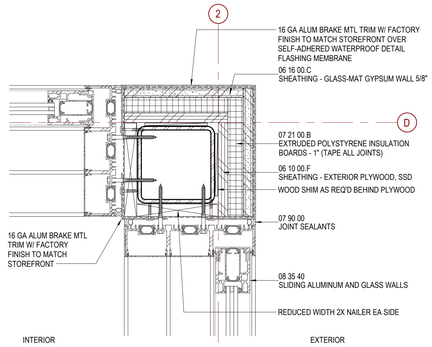

8 SLIDING WALL 3-TRACK AT CORNER
3" = 1'-0"
A-122

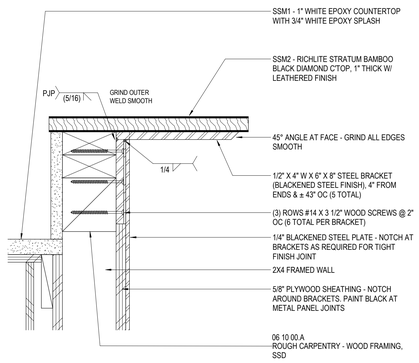

4 COUNTERTOP SUPPORT BRACKET
3" = 1'-0"
A-002

10/4/2023 7:55:33 AM

AGENCY APPROVAL STAMP:

IDENTIFICATION STAMP
DIV. OF THE STATE ARCHITECT
APP: 01-120890 INC:
REVIEWED FOR
SS ☑ FLS ☑ ACS ☑
DATE: 10/25/2023

TLCDARCHITECTURE
520 Third St. #250
Santa Rosa, CA 95401
o: 707.525.5600
f: 707.525.5616
tlcd.com

CONSULTANT:

STAMP:

LICENSED ARCHITECT
CARL SERTAIN
C-32087
REN:12/31/23
STATE OF CALIFORNIA

REVISIONS:

Number	Date	Description

NAPA VALLEY COLLEGE WINE EDUCATION CENTER

2277 NAPA VALLEJO HWY
NAPA, CA 94558

NAPA VALLEY COLLEGE

DSA APPLICATION NUMBER:
01-120890

TLCD PROJECT NUMBER:
21062.00

DATE:
04/12/2023

DETAILS - MISC

A-524

© THESE DRAWINGS ARE INSTRUMENTS OF SERVICE AND ARE THE SOLE PROPERTY OF TLCD ARCHITECTURE. ANY USE WITHOUT WRITTEN CONSENT IS PROHIBITED.

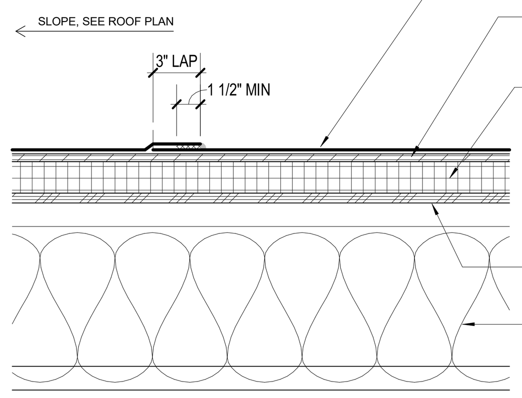

17 TPO ROOF ASSEMBLY
1 1/2" = 1'-0"

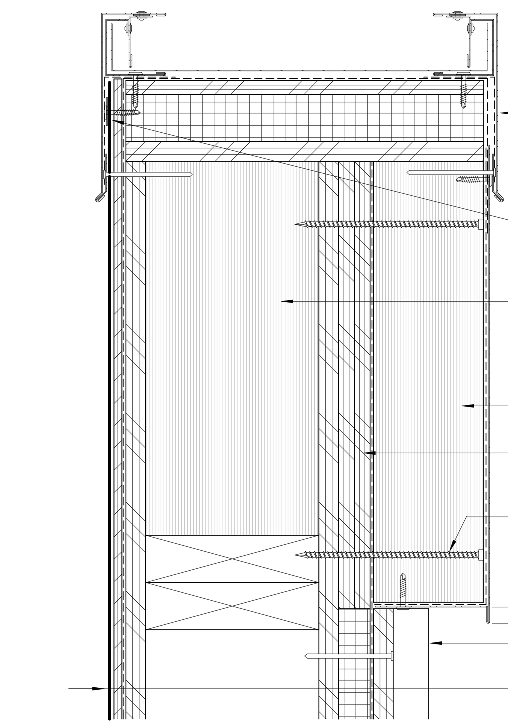

13 ROOF RAKE AT MECH WELL
3" = 1'-0"
A-122

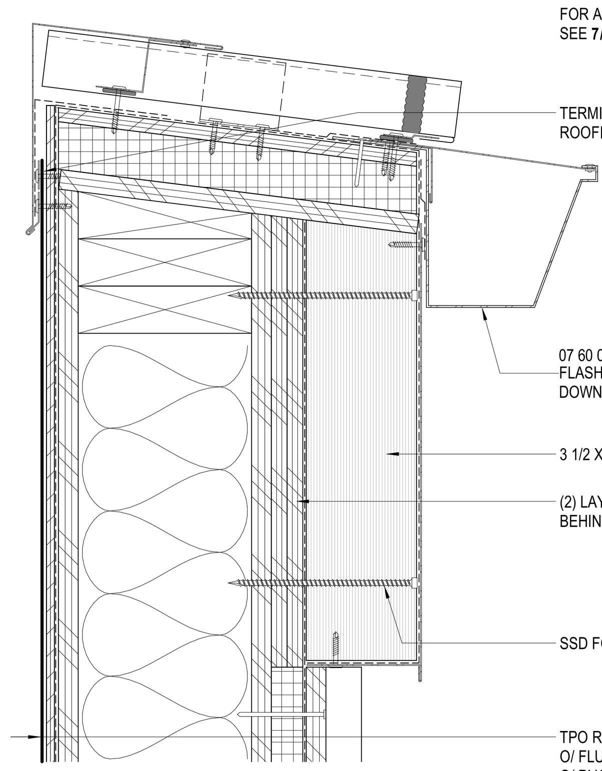

9 ROOF EAVE - LOWER GUTTER AT MECH WELL
3" = 1'-0"
A-122

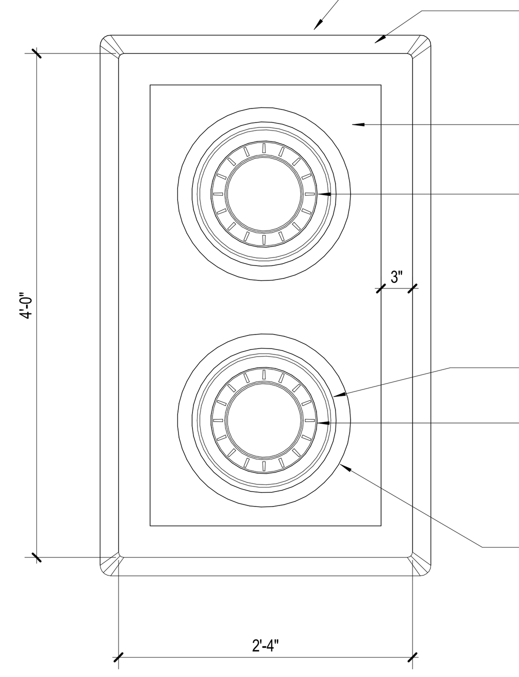

5 ROOF DRAIN & OVERFLOW SUMP
1" = 1'-0"

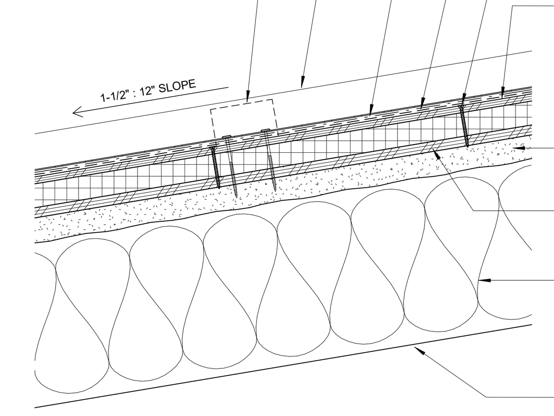

1 STANDING SEAM METAL ROOF ASSEMBLY
1 1/2" = 1'-0"

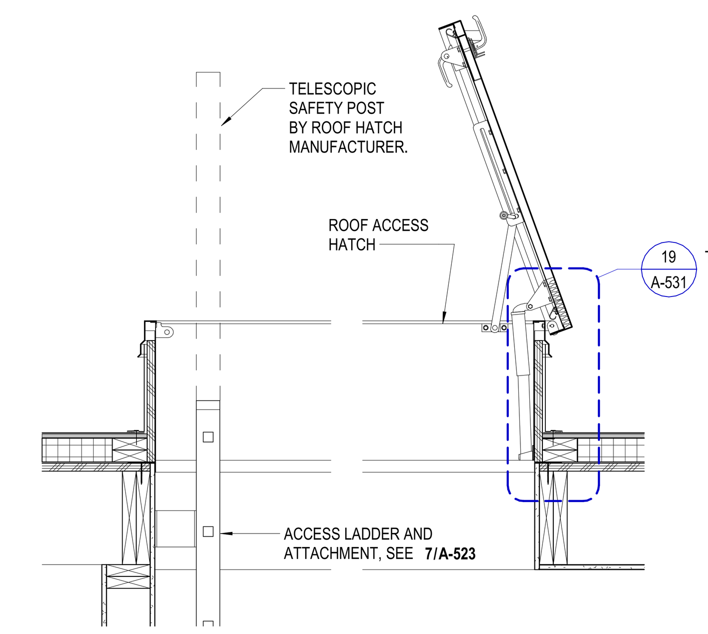

18 ROOF ACCESS HATCH
3/4" = 1'-0"

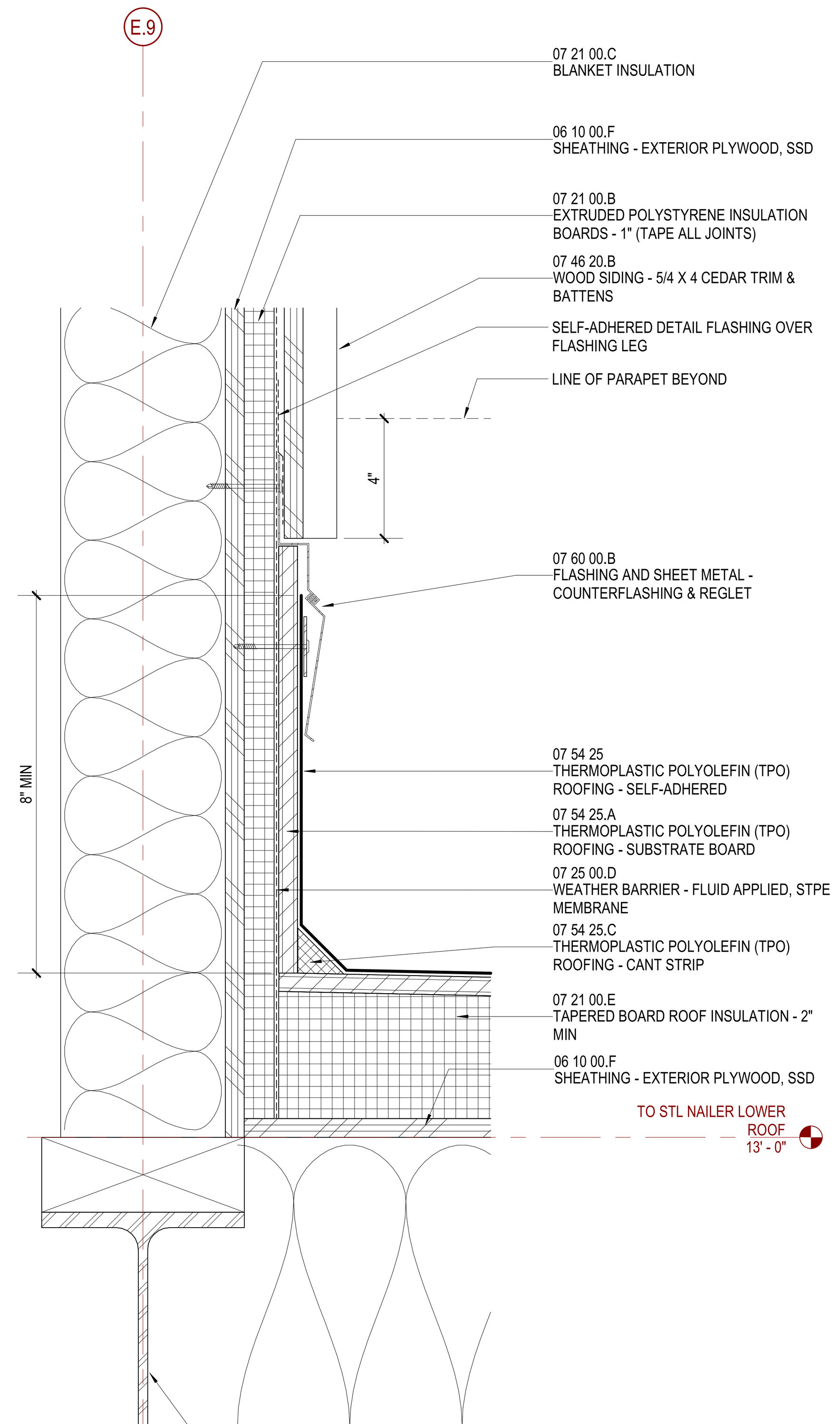

15 TPO TERMINATION @ BOARD & BATTEN
3" = 1'-0"
A-301

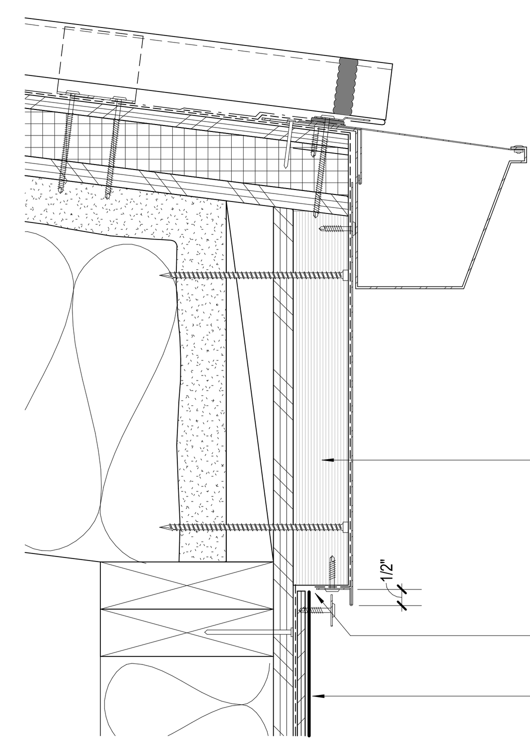

10 ROOF EAVE - UPPER GUTTER AT MECH WELL
3" = 1'-0"
A-122

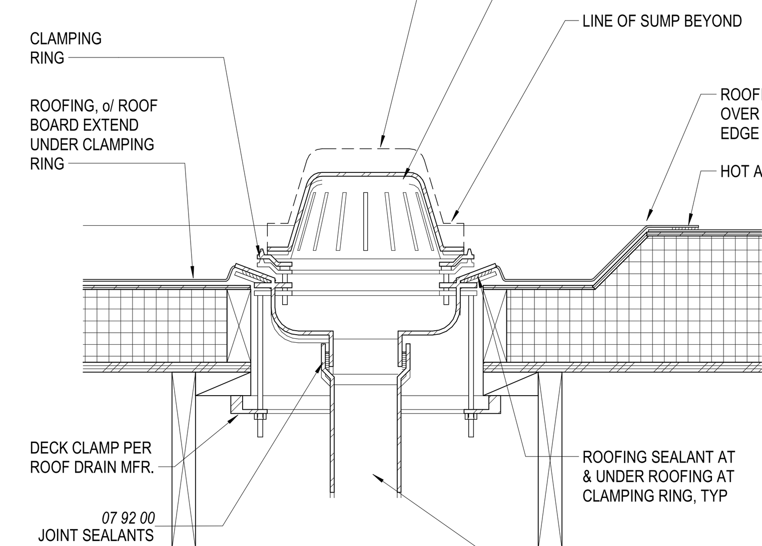

6 ROOF DRAIN @ SUMP
1 1/2" = 1'-0"

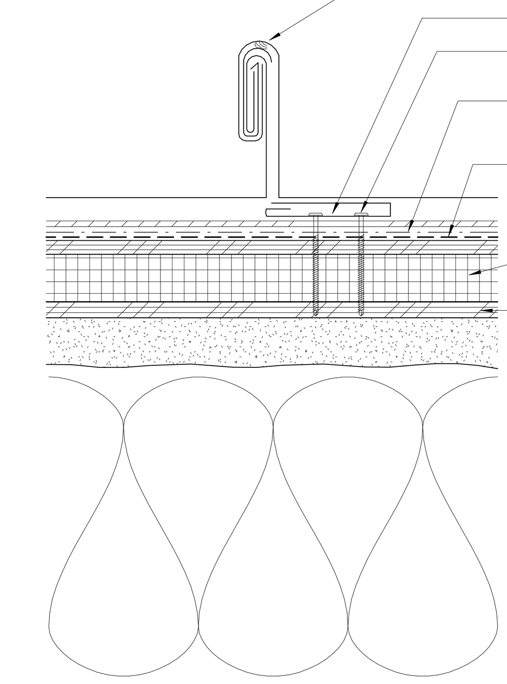

2 STANDING SEAM METAL ROOF ATTACHMENT CLIP
3" = 1'-0"

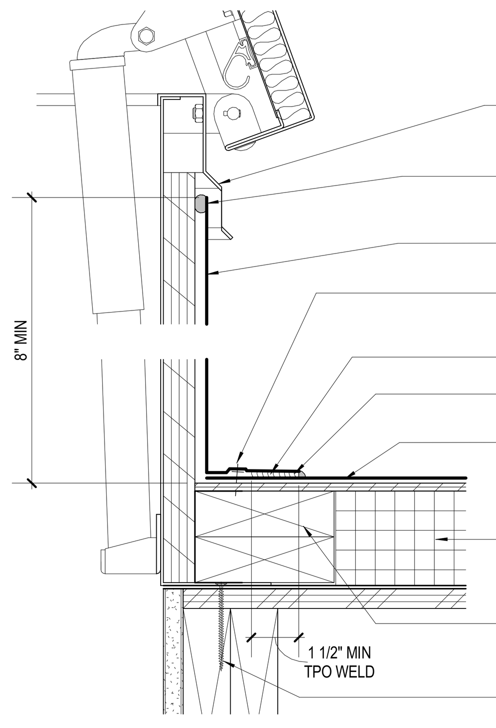

19 ROOFING @ ROOF ACCESS HATCH
3" = 1'-0"
A-531

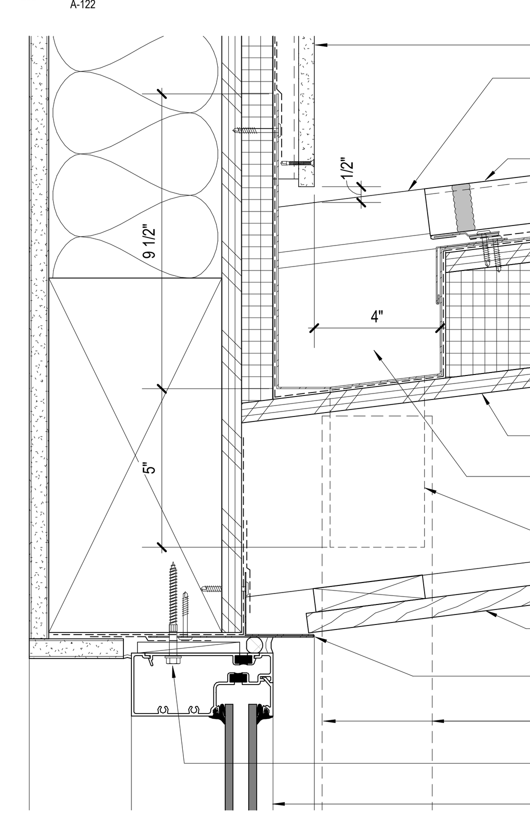

11 GUTTER AT ENTRY CANOPY
3" = 1'-0"
A-121

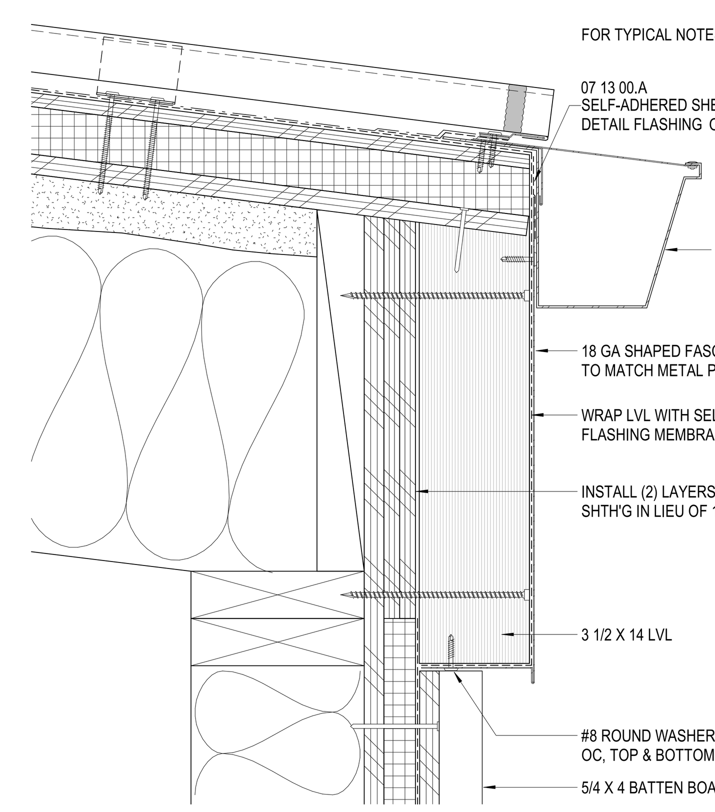

7 ROOF EAVE - GUTTER
3" = 1'-0"
A-122

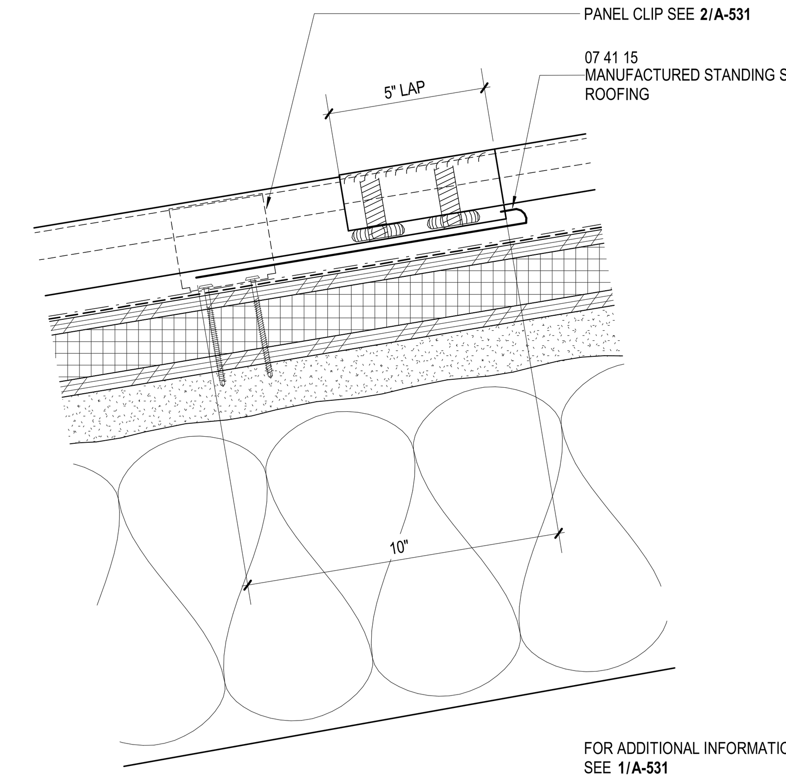

3 STANDING SEAM METAL ROOF PANEL LAP
3" = 1'-0"

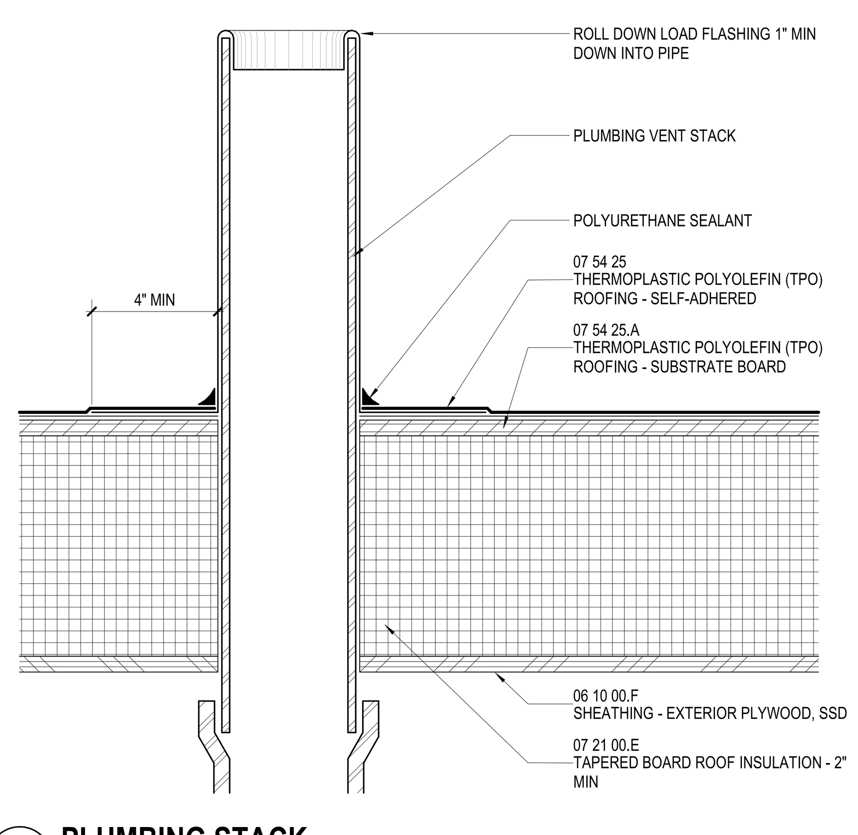

16 PLUMBING STACK
3" = 1'-0"

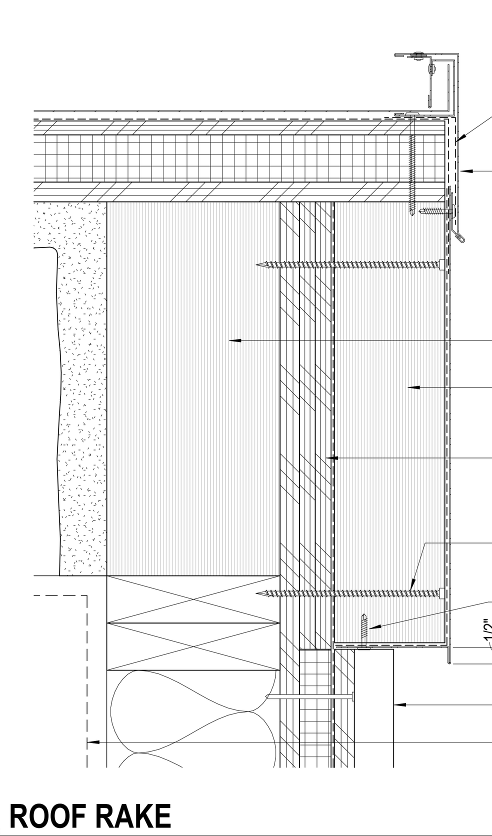

12 ROOF RAKE
3" = 1'-0"
A-122

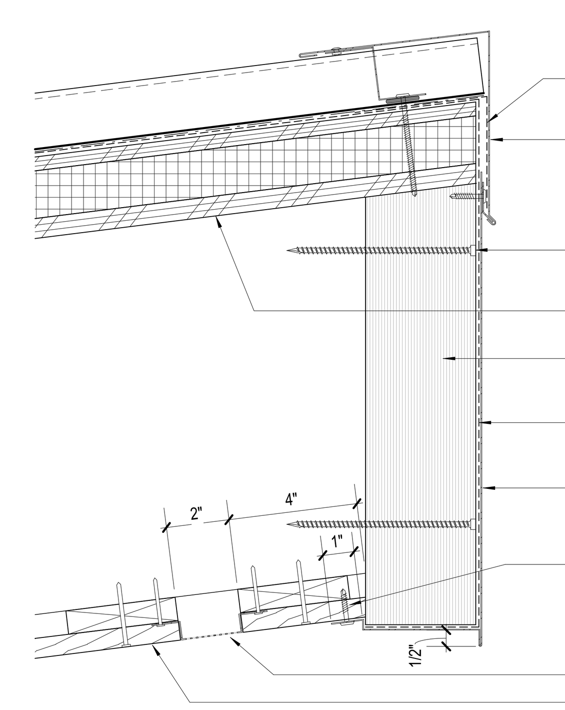

8 ROOF EAVE - HIGH
3" = 1'-0"
A-122

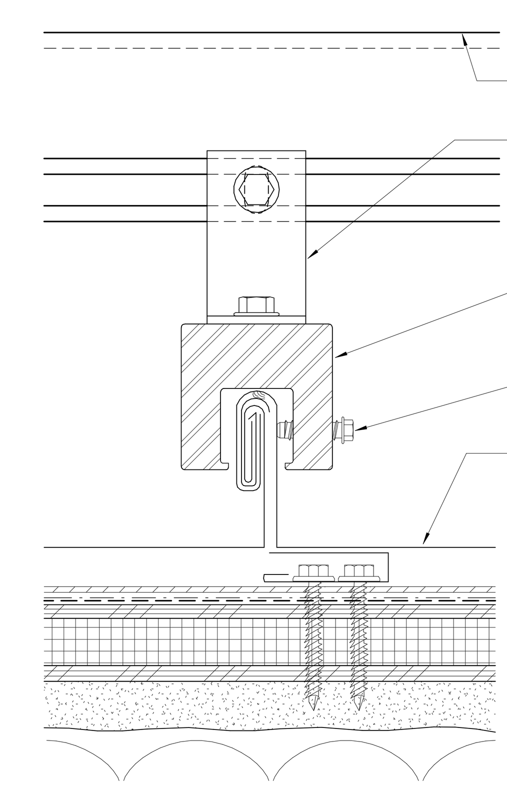

AFTER ALL THE CONNECTING DEVICES HAVE BEEN INSTALLED,TEST A MINIMUM OF 20 CONSECUTIVE DEVICES TO 200 LB (ASD). IF THERE IS NO FAILURE IN 20 CONSECUTIVE TESTS, TEST 10 PERCENT OF THE REMAINING INSTALLED CONNECTING DEVICES. IF FAILURE OCCURS BEFORE 20 CONSECUTIVE SUCCESSFUL TESTS ARE COMPLETED, THEN ADDITIONAL TESTS SHALL BE PERFORMED UNTIL 20 CONSECUTIVE SUCCESSFUL TESTS ARE COMPLETED, THEN CONTINUE AT A RATE OF 10 PERCENT ON THE REMAINING INSTALLED DEVICES. THE LOAD RATE SHALL BE PER ICC-ES AC428 SECTION 3.2.5.

4 SOLAR PANEL ATTACHMENT AT SSMR
3" = 1'-0"

10/4/2023 7:55:36 AM

AGENCY APPROVAL STAMP:

IDENTIFICATION STAMP
DIV. OF THE STATE ARCHITECT
APP: 01-120890 INC:
REVIEWED FOR
SS ☑ FLS ☑ ACS ☑
DATE: 10/25/2023

TLCDARCHITECTURE
520 Third St. #250
Santa Rosa, CA 95401
o: 707.525.5600
f: 707.525.5616
tlcd.com

CONSULTANT:

STAMP:

LICENSED ARCHITECT
CARL SERVAIS
C-32941
REN:12/31/23
STATE OF CALIFORNIA

REVISIONS:

Number	Date	Description

NAPA VALLEY COLLEGE WINE EDUCATION CENTER
2277 NAPA VALLEJO HWY
NAPA, CA 94558

NAPA VALLEY COLLEGE

DSA APPLICATION NUMBER:
01-120890

TLCD PROJECT NUMBER:
21062.00

DATE:
04/12/2023

© THESE DRAWINGS ARE INSTRUMENTS OF SERVICE AND ARE THE SOLE PROPERTY OF TLCD ARCHITECTURE. ANY USE WITHOUT WRITTEN CONSENT IS PROHIBITED.

DETAILS - ROOF

A-531

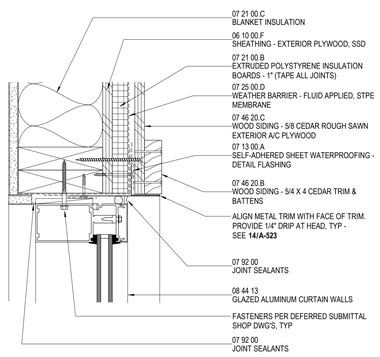

17 CURTAIN WALL JAMB
3" = 1'-0"
A-201

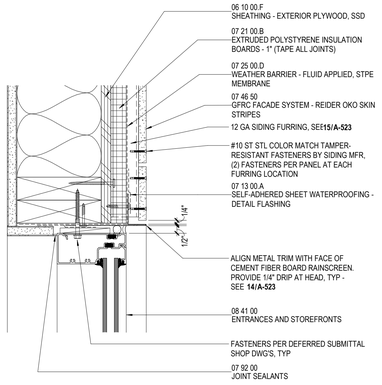

13 STOREFRONT JAMB (HEAD SIM) AT RAINSCREEN
3" = 1'-0"
A-201

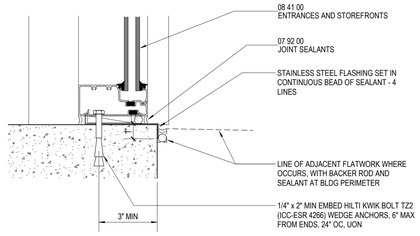

9 EXTERIOR STOREFRONT SILL AT CONCRETE
3" = 1'-0"
A-401

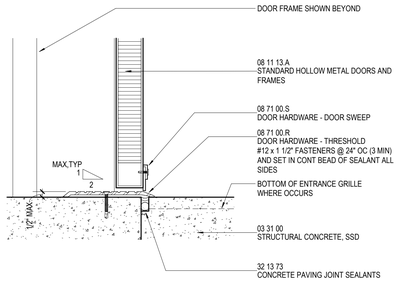

5 EXTERIOR THRESHOLD
3" = 1'-0"

DSA NOTE: ALL OPERABLE HARDWARE INCLUDING LEVER HANDLES, DEAD BOLTS, AND PANIC HARDWARE SHALL BE MOUNTED BETWEEN 30" - 44" A.F.F. SEE MOUNTING HEIGHT DIMENSIONS AS INDICATED BELOW.

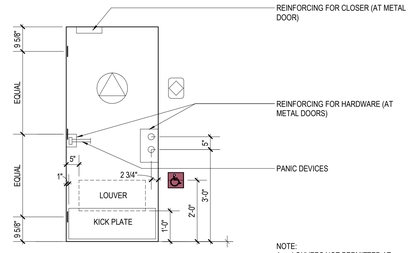

NOTE:
1. LOUVERS NOT PERMITTED AT RATED DOORS
2. DEAD BOLTS NOT ALLOWED UNLESS OPERABLE FROM INSIDE WITHOUT USE OF A KEY OR ANY SPECIAL KNOWLEDGE

1 DOOR HARDWARE
1/2" = 1'-0"

NOTE: DO NOT OVERTIGHTEN FLASHING FASTENER AND CRUSH RIGID INSULATION

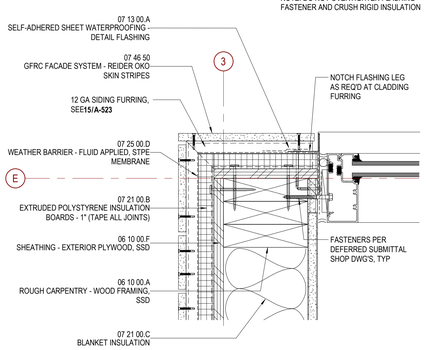

18 STOREFRONT AT CEMENT FIBER PANEL END WALL
3" = 1'-0"
A-121

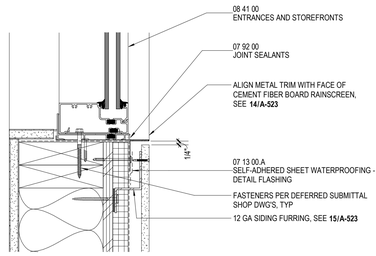

FOR ADDITIONAL INFORMATION SEE 13/A-541

14 STOREFRONT SILL AT RAINSCREEN
3" = 1'-0"
A-201

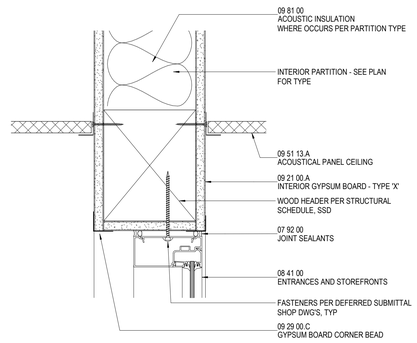

10 TYP INTERIOR STOREFRONT HEAD - (JAMB SIM.)
3" = 1'-0"

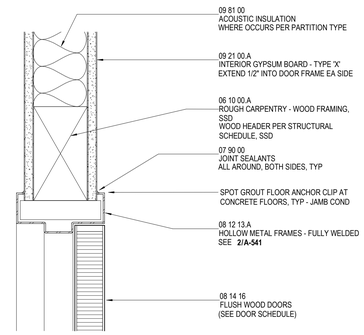

NOTE: ADJUST THROAT TO ACCOMM WALL FINISHES AS SCHEDULED, TYP

6 TYP INTERIOR DOOR HEAD
3" = 1'-0"

JAMB SIMILAR

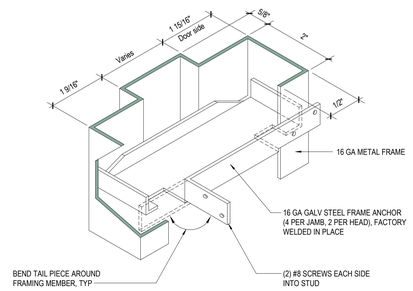

2 DOOR FRAME
3" = 1'-0"

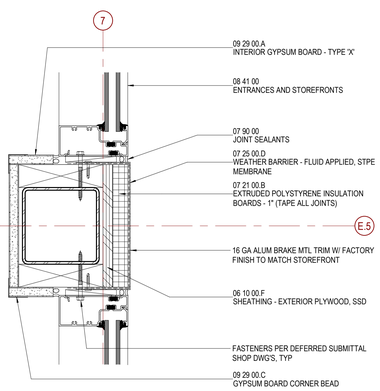

19 ALUM BRAKE METAL AT STOREFRONT
3" = 1'-0"
A-121

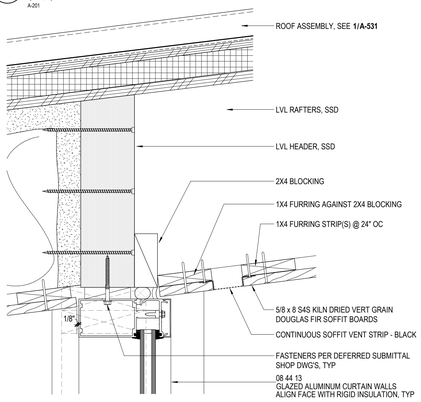

15 CURTAIN WALL HEAD
3" = 1'-0"
A-201

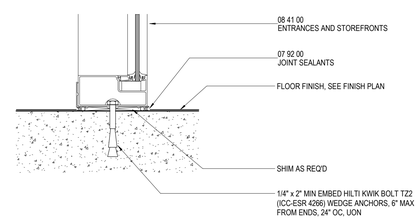

11 INTERIOR STOREFRONT SILL @ CONCRETE SLAB
3" = 1'-0"

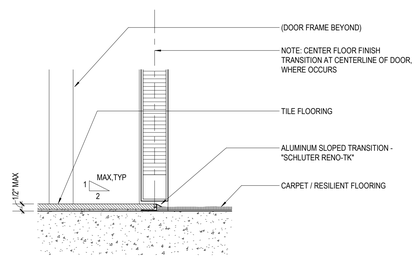

7 TRANSITION AT DOOR - TILE TO CARPET
3" = 1'-0"

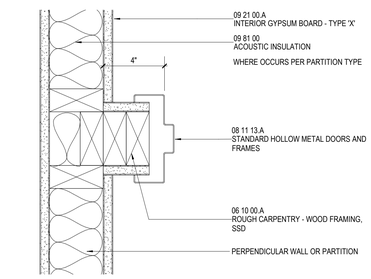

3 TYP DOOR JAMB OFFSET - HM FRAME
3" = 1'-0"

FOR ADDITIONAL INFORMATION, SEE 17/A-541

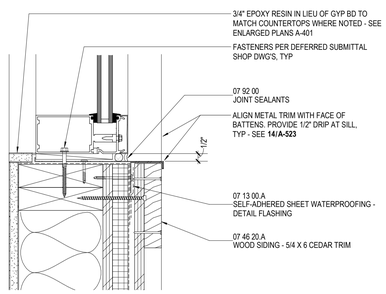

16 CURTAIN WALL SILL
3" = 1'-0"
A-201

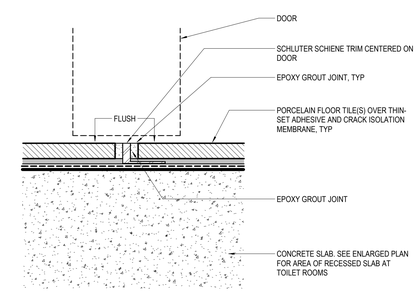

12 TILE TRANSITION AT TOILET DOORS
12" = 1'-0"
A-402

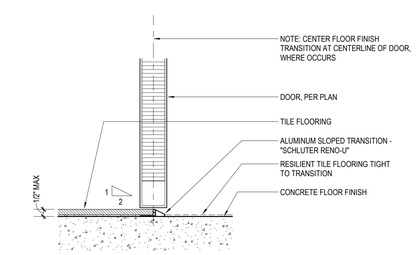

8 TRANSITION AT DOOR - TILE TO CONCRETE/RESILIENT
3" = 1'-0"

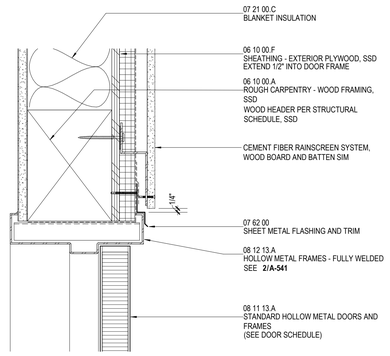

NOTE: ADJUST THROAT TO ACCOMM WALL FINISHES AS SCHEDULED, TYP

4 TYP EXTERIOR DOOR HEAD
3" = 1'-0"

JAMB SIMILAR

AGENCY APPROVAL STAMP:

IDENTIFICATION STAMP
DIV. OF THE STATE ARCHITECT
APP: 01-120890 INC:
REVIEWED FOR
SS ☑ FLS ☑ ACS ☑
DATE: 10/25/2023

TLCDARCHITECTURE
520 Third St. #250
Santa Rosa, CA 95401
o: 707.525.5600
f: 707.525.5616
tlcd.com

CONSULTANT:

STAMP:

LICENSED ARCHITECT
CARL SERTARIS
C-32363
REN:12/31/23
STATE OF CALIFORNIA

REVISIONS:

Number	Date	Description

NAPA VALLEY COLLEGE WINE EDUCATION CENTER

2277 NAPA VALLEJO HWY
NAPA, CA 94558

NAPA VALLEY COLLEGE

DSA APPLICATION NUMBER:
01-120890

TLCD PROJECT NUMBER:
21062.00

DATE:
04/12/2023

DETAILS - OPENINGS

A-541

© THESE DRAWINGS ARE INSTRUMENTS OF SERVICE AND ARE THE SOLE PROPERTY OF TLCD ARCHITECTURE. ANY USE WITHOUT WRITTEN CONSENT IS PROHIBITED.

10/4/2023 7:55:37 AM

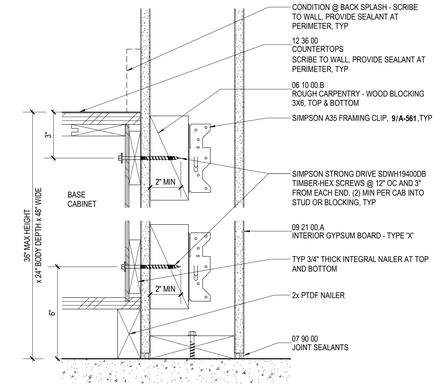

17 BASE CABINET ANCHORAGE @ WALL
3" = 1'-0"
A-561

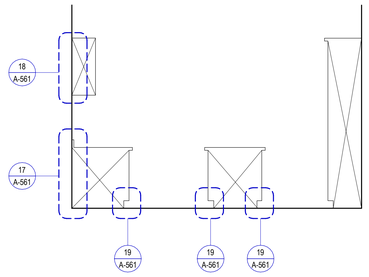

13 TYPICAL ANCHORAGE REQ
3/8" = 1'-0"

BLOCKING AND CONNECTORS						
BLOCKING SIZE	MAX SPAN	SIMPSON MODEL NO.	BLOCKING NAILING	STRUCTURE NAILING	FIG.	MAX LOAD, LBS.
2x4	4'	A34	4-8d x 1-1/2"	4-8d x 1-1/2"	A	280
2x6	6'	A35	6-8d x 1-1/2"	6-8d x 1-1/2"	A	450
2x4	4'	U24	2-10d x 1-1/2"	4-16d	B	245
2x6	6'	U26	4-10d x 1-1/2"	6-16d	B	385
2x8	6'	U28	6-10d x 1-1/2"	8-16d	B	508
4x4	6'	UTF44 / HU44	2-10d	4-16d	C	530
4x6	8'	UTF46 / HU46	4-10d	8-16d	C	1065
4x8	8'	UTF46 / HU46	4-10d	8-16d	C	1065

NOTE:
1. MAXIMUM LOAD RATING SHOWN IS FOR EACH BLOCKING MEMBER
2. THE SCHEDULE IS BASED ON 2-FRAMING ANCHORS
3. NAILING NOTED FOR EACH FRAMING ANCHOR

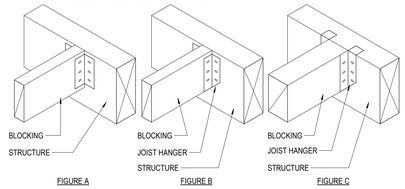

9 BLOCKING CONNECTOR TABLE
3" = 1'-0"

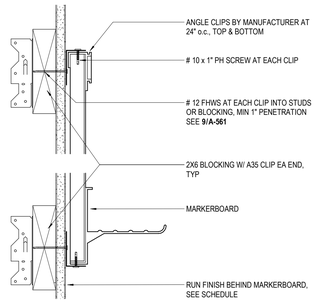

5 MARKERBOARD ANCHORAGE
3" = 1'-0"

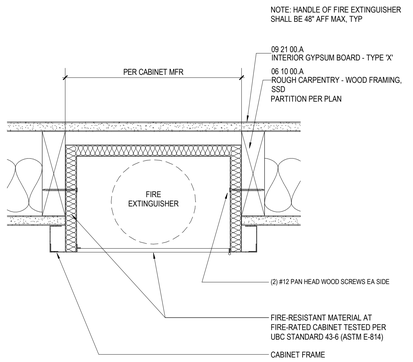

1 FIRE EXTINGUISHER CABINET AT RATED PARTITION
3" = 1'-0"
A-561
(NON-RATED PARTITION SIM)

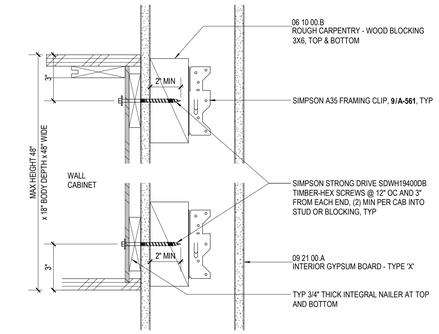

18 WALL CABINET ANCHORAGE @ WALL
3" = 1'-0"
A-561
REF: WC-01

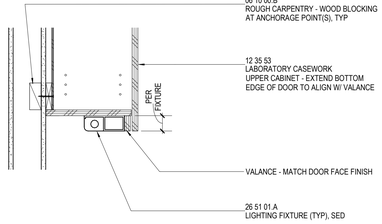

14 UNDER CABINET LIGHT
1 1/2" = 1'-0"

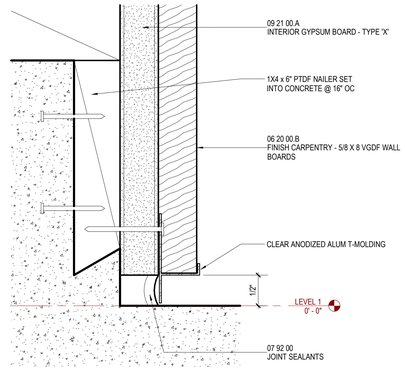

10 WOOD PLANK TRIM AT FLOOR
12" = 1'-0"
A-253

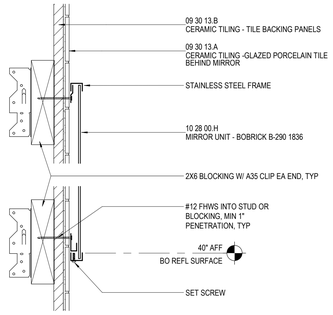

6 MIRROR ATTACHMENT
3" = 1'-0"

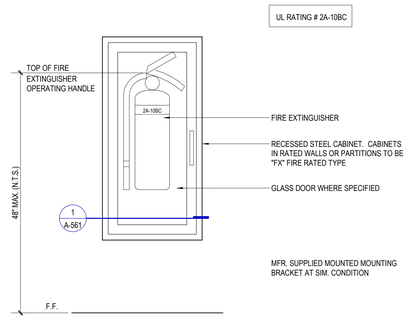

2 FIRE EXTINGUISHER MOUNTING
1 1/2" = 1'-0"

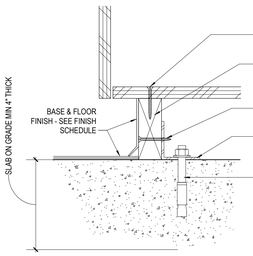

19 TOE KICK BASE ANCHORAGE @ SLAB
3" = 1'-0"
A-561
REF: BC-02 & PC-01

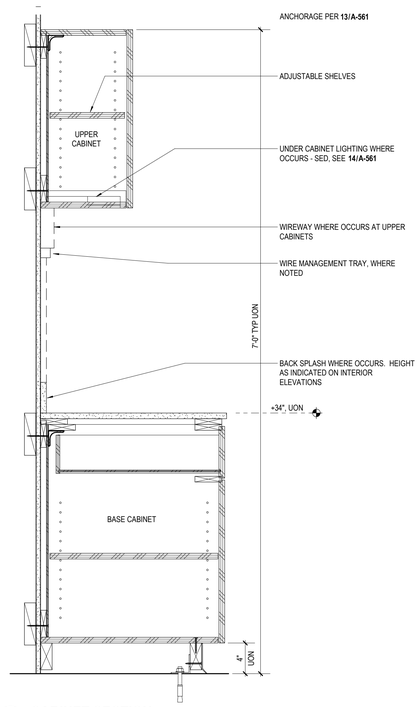

16 CABINET SECTION
1 1/2" = 1'-0"

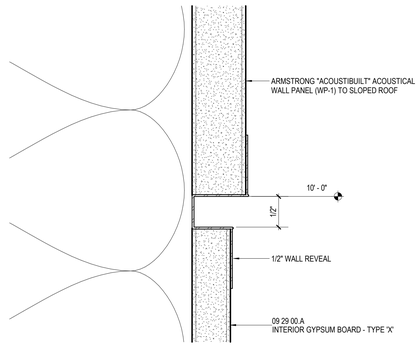

11 TRANSITION AT ACOUSTICAL WALL PANELS
12" = 1'-0"
A-251

A. END PANELS:
PROVIDE END PRIVACY PANELS AT ALL BASE CABINET RETURNS WHICH WILL BE EXPOSED TO VIEW OR APPROACH WHEN INSTALLED.

B. SIDE SPLASHES AT COUNTERTOPS:
PROVIDE SIDE SPLASHES AT ALL LOCATIONS WHERE COUNTERTOPS WITH BACK SPLASHES MEET ADJACENT PARTITION.

C. GROMMETS:
PROVIDE GROMMETS AS SPECIFIED AND NOTED AT ALL COUNTERTOPS WITH KNEE SPACE BELOW. PROVIDE A MIN OF ONE GROMMET FOR EACH 36" LENGTH OF KNEE SPACE IF NOT SHOWN ON DRAWINGS. TYPICAL GROMMETS SHALL BE PER SPECIFICATIONS. EXACT LOCATIONS OF GROMMETS TO BE DETERMINED BY USER IN FIELD AFTER CASEWORK IS INSTALLED.

D. ACCESS PANELS:
PROVIDE REMOVABLE BACK PANEL (SIZE OF ENTIRE CABINET BACK) AT CABINETS CONTAINING SINK OR OTHER PLUMBING, DATA/COMMUNICATION LINES, OTHER ELECTRICAL WIRING OR EQUIPMENT WIRING AS INDICATED ON DETAILS, SMD & SED.

E. TOE KICK:
TOE KICKS ON CASEWORK ARE TO BE 3" DEEP & 4" HIGH TYP UON. PROVIDE SAME BASE FINISH AND MATERIALS AS ON ADJACENT WALLS UON - SEE FINISH SCHEDULE. EXTEND BASE TO WALL AT ALL CABINET RETURNS, RECESSES, AND END PANELS.

F. HARDWARE:
PROVIDE U-SHAPED WIRE PULLS AT ALL ACCESSIBLE CASEWORK OR EQUALLY ACCESSIBLE PULL HARDWARE THAT DOES NOT REQUIRE TIGHT GRASPING, PINCHING, OR TWISTING OF THE WRIST

12 CASEWORK NOTES
.

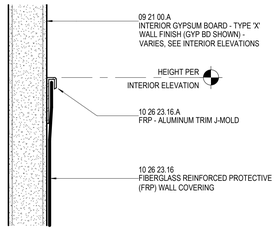

7 'J' MOLD TRIM AT FRP
1 : 1

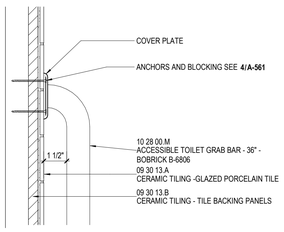

3 GRAB BAR ANCHORAGE
3" = 1'-0"

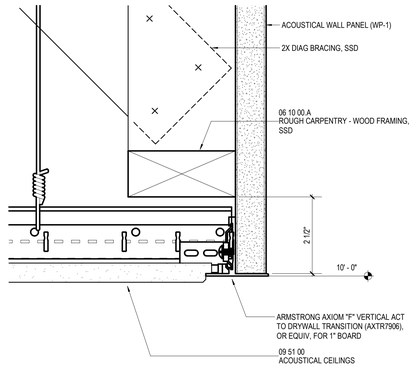

8 SUSP CLG TRANSITION AT BULKHEAD
6" = 1'-0"
A-171

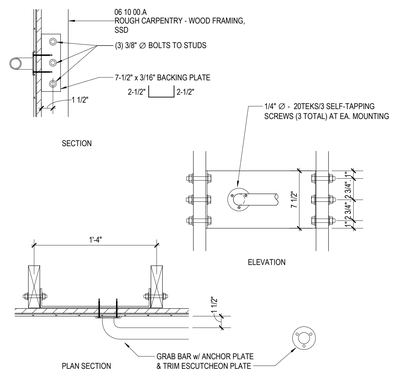

4 GRAB BAR BACKING
1 1/2" = 1'-0"

10/4/2023 7:56:39 AM

AGENCY APPROVAL STAMP:

IDENTIFICATION STAMP
DIV. OF THE STATE ARCHITECT
APP: 01-120890 INC:
REVIEWED FOR
SS ☑ FLS ☑ ACS ☑
DATE: 10/25/2023

TLCDARCHITECTURE
520 Third St. #250
Santa Rosa, CA 95401
o: 707.525.5600
f: 707.525.5616
tlcd.com

CONSULTANT:

STAMP:

LICENSED ARCHITECT
CARL SERTAIN
C-32367
REN:12/31/23
STATE OF CALIFORNIA

REVISIONS:

Number	Date	Description

NAPA VALLEY COLLEGE WINE EDUCATION CENTER

2277 NAPA VALLEJO HWY
NAPA, CA 94558

NAPA VALLEY COLLEGE

DSA APPLICATION NUMBER:
01-120890

TLCD PROJECT NUMBER:
21062.00

DATE:
04/12/2023

DETAILS - INTERIOR

A-561

© THESE DRAWINGS ARE INSTRUMENTS OF SERVICE AND ARE THE SOLE PROPERTY OF TLCD ARCHITECTURE. ANY USE WITHOUT WRITTEN CONSENT IS PROHIBITED.

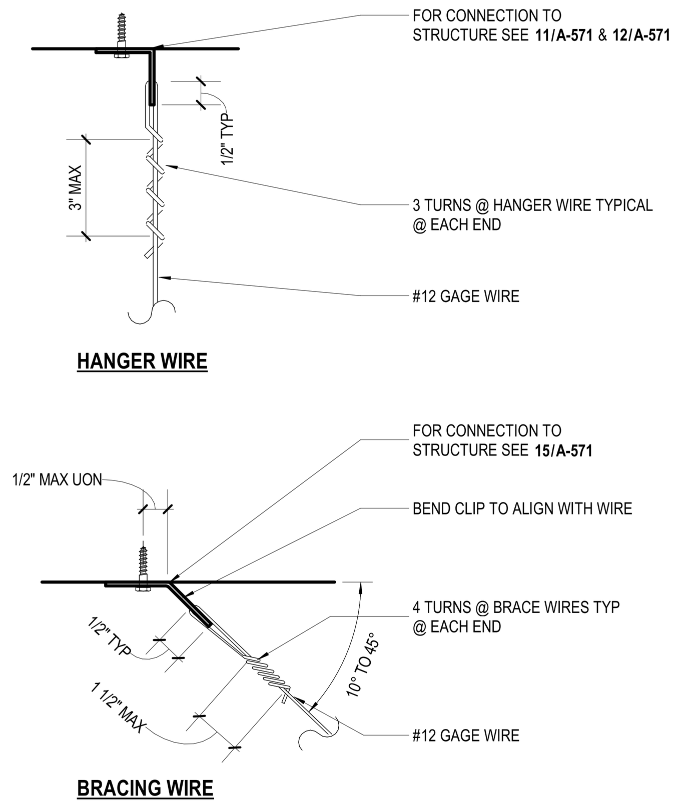

13 HANGER & BRACING - TYP WIRE TURNS
3" = 1'-0" REFERENCE DSA IR 25-2

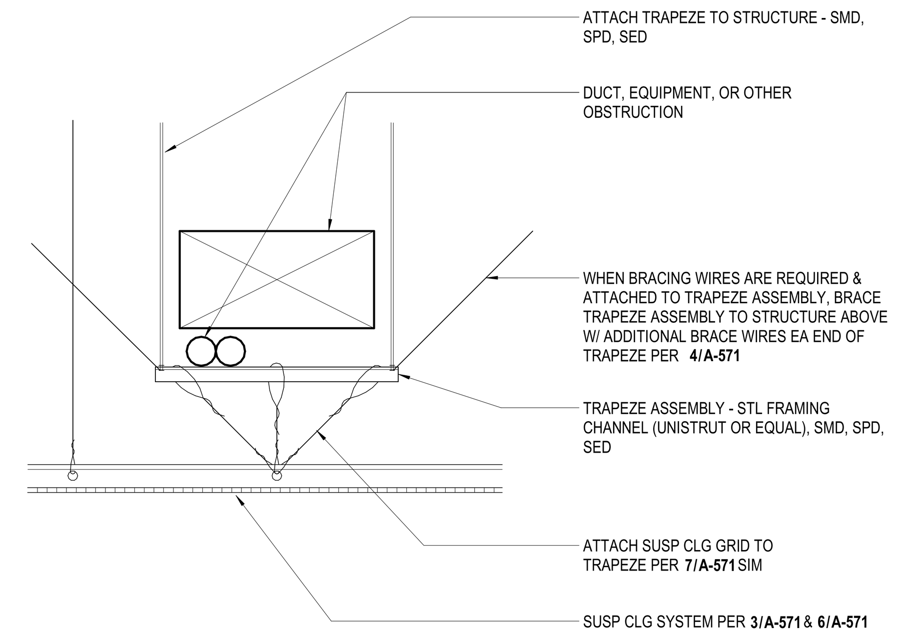

9 SUPPLEMENTAL CEILING SUPPORT
1 1/2" = 1'-0"

INSTALLATION SHALL COMPLY WITH APPLICABLE CODES (SEE TITLE SHEET) AND THE FOLLOWING:

DSA IR 25-2 "METAL SUSPENSION SYSTEMS FOR LAY-IN PANEL CEILINGS: 2019 CBC"

1. CEILING SYSTEM GENERAL NOTES

1.01 CEILING SYSTEM COMPONENTS SHALL COMPLY WITH ASTM C635 AND SECTION 5.1 OF ASTM E580.

1.02 THE CEILING GRID SYSTEM MUST BE RATED HEAVY DUTY AS DEFINED BY ASTM C635.

1.03 CEILING SYSTEMS. THE FOLLOWING CEILING SYSTEM(S) IS/ARE PART OF THE SCOPE OF THIS PROJECT:
MANUFACTURER: ***ARMSTRONG WORLD INDUSTRIES***
PRODUCT NAME: ***ULTIMA WITH 15/16" PRELUDE GRID***
EVALUATION REPORT TYPE AND NUMBER: ***ESR 1308***
MAIN RUNNER PART, MODEL, OR CATALOG NUMBER: ***AL7200***
CROSS RUNNER PART, MODEL, CATALOG NUMBER: ***XLAL7200***

1.04 SEISMIC WALL CLIP:
MANUFACTURER'S MODEL: ***BERC-2***

1.05 CEILING PANELS SHALL NOT SUPPORT ANY LUMINAIRES, AIR TERMINALS OR DEVICES.

1.06 FOR CEILING INSTALLATIONS UTILIZING ACOUSTICAL TILE PANELS OF MINERAL OR GLASS FIBER, IT IS NOT MANDATORY TO PROVIDE ¾" CLEARANCE BETWEEN THE ACOUSTICAL TILE PANELS AND THE WALL ON THE SIDES OF THE CEILING WHICH ARE FREE TO SLIP. FOR ALL OTHER CEILING PANEL TYPES, PROVIDE ¾" CLEARANCE BETWEEN THE CEILING PANEL AND THE WALL ON THE SIDES OF THE CEILING FREE TO SLIP. CLEARANCE BETWEEN CEILING GRID RUNNERS/MEMBERS AND WALLS SHALL COMPLY WITH THE DETAILS ON THESE DRAWINGS REGARDLESS OF CEILING TILE MATERIAL.

2. MATERIALS

2.01 CEILING WIRE SHALL BE CLASS 1 ZINC COATED (GALVANIZED) CARBON STEEL CONFORMING TO ASTM A641. WIRE SHALL BE #12 GAUGE (0.106" DIAMETER) WITH SOFT TEMPER AND MINIMUM ULTIMATE TENSILE STRENGTH = 70 KSI.

2.02 GALVANIZED SHEET STEEL (INCLUDING THAT USED FOR METAL STUD AND TRACK COMPRESSION STRUTS/POST) SHALL CONFORM TO ASTM A653, OR OTHER EQUIVALENT SHEET STEEL LISTED IN SECTION A3.1 OF THE NORTH AMERICAN SPECIFICATION FOR THE DESIGN OF COLD-FORMED STEEL STRUCTURAL MEMBERS, (AISI S100). MATERIAL 43 MIL (18 GAUGE) AND LIGHTER SHALL HAVE MINIMUM YIELD STRENGTH OF 33 KSI. MATERIAL 54 MIL (16 GAUGE) AND HEAVIER SHALL HAVE A MINIMUM YIELD STRENGTH OF 50 KSI.

2.03 ELECTRICAL METALLIC TUBE (EMT) SHALL BE ANSI C80.3/UL 797 CARBON STEEL WITH G90 GALVANIZING. EMT SHALL HAVE MINIMUM YIELD STRENGTH (FY) OF 30 KSI AND MINIMUM ULTIMATE STRENGTH (FU) OF 48 KSI.

3. ATTACHMENT OF HANGER AND BRACING WIRES

3.01 SEPARATE ALL CEILING HANGER AND BRACING WIRES AT LEAST 6 INCHES FROM ALL UNBRACED DUCTS, PIPES, CONDUIT, ETC.

3.02 HANGER AND BRACING WIRES SHALL NOT ATTACH TO OR BEND AROUND OBSTRUCTIONS INCLUDING BUT NOT LIMITED TO PIPING, DUCTWORK, CONDUIT AND EQUIPMENT.

3.03 HANGER WIRES THAT ARE MORE THAN ONE (HORIZONTAL) IN SIX (VERTICAL) OUT OF PLUMB SHALL HAVE COUNTER-SLOPING WIRES.

3.04 SLACK SAFETY WIRES SHALL BE CONSIDERED HANGER WIRES FOR INSTALLATION AND TESTING REQUIREMENTS.

3.05 HANGER AND BRACING WIRE ANCHORAGE TO THE STRUCTURE SHALL BE INSTALLED IN SUCH A MANNER THAT THE DIRECTION OF THE ANCHORAGE ALIGNS CLOSELY WITH THE DIRECTION OF THE WIRE (E.G., BRACING WIRE CEILING CLIPS MUST BE BENT AS SHOWN IN THE DETAILS AND ROTATED AS REQUIRED TO ALIGN CLOSELY WITH THE DIRECTION OF THE WIRE, SCREW EYES IN WOOD MUST BE INSTALLED SO THEY ALIGN CLOSELY WITH THE DIRECTION OF THE WIRE, ETC.).

4. FASTENERS AND WELDING

4.01 SHEET METAL SCREWS SHALL COMPLY WITH ASTM C1513 AND ASME B18.6.3. PENETRATION OF SCREWS THROUGH JOINED MATERIAL SHALL NOT BE LESS THAN THREE EXPOSED THREADS.

4.02 EXPANSION ANCHORS SHALL BE: ***HILTI 'KB-TZ2' (ICC ESR 4266)***

4.03 POWER-ACTUATED FASTENERS SHALL BE: ***HILTI 'X-U' (ICC REPORT ESR-2269)***

4.04 IF NOT OTHERWISE SPECIFIED IN THE EVALUATION REPORT, POWER-ACTUATED FASTENERS INSTALLED IN STEEL SHALL BE INSTALLED SO THE ENTIRE POINTED END OF THE FASTENER IS DRIVEN THROUGH THE STEEL MEMBER

4.05 POWER-ACTUATED FASTENERS IN CONCRETE OR MASONRY ARE NOT PERMITTED FOR BRACING WIRES.

4.06 CONCRETE REINFORCEMENT AND PRESTRESSING TENDONS SHALL BE LOCATED BY NON-DESTRUCTIVE MEANS PRIOR TO INSTALLING POST-INSTALLED ANCHORS.

4.07 WELDING SHALL BE IN ACCORDANCE WITH AWS D1.3 USING E60XX SERIES ELECTRODES.

5. TESTING

5.01 ALL FIELD TESTING MUST BE PERFORMED IN THE PRESENCE OF THE PROJECT INSPECTOR.

5.02 POST-INSTALLED ANCHORS IN CONCRETE USED TO SUPPORT HANGER WIRES SHALL BE TESTED AT A FREQUENCY OF 10 PERCENT. POWER-ACTUATED FASTENERS IN CONCRETE SHALL BE FIELD TESTED FOR 200 POUNDS IN TENSION. ALL OTHER POST-INSTALLED ANCHORS IN CONCRETE SHALL BE TESTED IN ACCORDANCE WITH CBC SECTION 1910A.5.

5.03 POST-INSTALLED ANCHORS IN CONCRETE USED TO ATTACH BRACING WIRES SHALL BE TESTED AT A FREQUENCY OF 50 PERCENT IN ACCORDANCE WITH CBC SECTION 1910A.5.

6. LUMINAIRES

6.01 ALL LUMINAIRES SHALL BE POSITIVELY ATTACHED TO THE CEILING SUSPENSION SYSTEMS BY MECHANICAL MEANS TO RESIST A HORIZONTAL FORCE EQUAL TO THE WEIGHT OF THE LUMINAIRE. A MINIMUM OF TWO SCREWS OR APPROVED FASTENERS ARE REQUIRED AT EACH LUMINAIRE, PER ASTM E580 SECTION 5.3.1.

6.02 SURFACE-MOUNTED LUMINAIRES SHALL BE ATTACHED TO THE MAIN RUNNER WITH AT LEAST TWO POSITIVE CLAMPING DEVICES. THE CLAMPING DEVICE SHALL COMPLETELY SURROUND THE SUPPORTING CEILING RUNNER AND BE MADE OF STEEL WITH A MINIMUM THICKNESS OF #14 GAUGE. ROTATIONAL SPRING CATCHES DO NOT COMPLY. A #12 GAUGE SLACK SAFETY WIRE SHALL BE CONNECTED FROM EACH CLAMPING DEVICE TO THE STRUCTURE ABOVE. PROVIDE ADDITIONAL SUPPORTS WHEN A LUMINAIRE IS 8 FEET OR LONGER OR EXCEEDS 56 POUNDS. MAXIMUM SPACING BETWEEN SUPPORTS SHALL NOT EXCEED 8 FEET.

6.03 LUMINAIRES WEIGHING LESS THAN OR EQUAL TO 10 POUNDS MAY BESUPPORTED DIRECTLY ON THE CEILING RUNNERS, SHALL HAVE A MINIMUM OF ONE #12 GAUGE SLACK SAFETY WIRE CONNECTED FROM THE FIXTURE HOUSING TO THE STRUCTURE ABOVE.

6.04 LUMINAIRES WEIGHING GREATER THAN 10 POUNDS BUT LESS THAN OR EQUAL TO 56 POUNDS MAY BE SUPPORTED DIRECTLY ON THE CEILING RUNNERS, BUT THEY SHALL HAVE A MINIMUM OF TWO #12 GAUGE SLACK SAFETY WIRES CONNECTED FROM THE FIXTURE HOUSING AT DIAGONAL CORNERS TO THE STRUCTURE ABOVE.

EXCEPTION: ALL LUMINAIRES GREATER THAN TWO BY FOUR FEET WEIGHING LESS THAN 56 POUNDS SHALL HAVE A #12 GAUGE SLACK SAFETY WIRE AT EACH CORNER.

6.05 ALL LUMINAIRES WEIGHING GREATER THAN 56 POUNDS SHALL BE INDEPENDENTLY SUPPORTED BY NOT LESS THAN FOUR TAUT #12 GAUGE HANGER WIRES (ONE AT EACH CORNER) ATTACHED FROM THE FIXTURE HOUSING TO THE STRUCTURE ABOVE OR OTHER APPROVED HANGERS. THE FOUR TAUT #12 GAUGE WIRES OR OTHER APPROVED HANGERS, INCLUDING THEIR ATTACHMENT TO THE STRUCTURE ABOVE, SHALL BE CAPABLE OF SUPPORTING FOUR TIMES THE WEIGHT OF THE FIXTURE.

7. SERVICES WITHIN THE CEILING

7.01 ALL FLEXIBLE SPRINKLER HOSE FITTING MOUNTING BRACKETS, CEILING-MOUNTED AIR TERMINALS OR OTHER SERVICES SHALL BE POSITIVELY ATTACHED TO THE CEILING SUSPENSION SYSTEMS BY MECHANICAL MEANS. SCREWS OR APPROVED FASTENERS ARE REQUIRED. A MINIMUM OF TWO ATTACHMENTS ARE REQUIRED AT EACH COMPONENT.

7.02 CEILING-MOUNTED AIR TERMINALS OR OTHER SERVICES WEIGHING LESS THAN OR EQUAL TO 20 POUNDS SHALL HAVE ONE #12 GAUGE SLACK SAFETY WIRE ATTACHED FROM THE TERMINAL OR SERVICE TO THE STRUCTURE ABOVE.

7.03 FLEXIBLE SPRINKLER HOSE FITTINGS, CEILING-MOUNTED AIR TERMINALS OR OTHER SERVICES WEIGHING MORE THAN 20 POUNDS BUT LESS THAN OR EQUAL TO 56 POUNDS SHALL HAVE TWO #12 GAUGE SLACK SAFETY WIRES (AT DIAGONAL CORNERS) CONNECTED FROM THE TERMINAL OR SERVICE TO THE STRUCTURE ABOVE.

7.04 FLEXIBLE SPRINKLER HOSE FITTINGS, CEILING-MOUNTED AIR TERMINALS OR OTHER SERVICES WEIGHING MORE THAN 56 POUNDS SHALL BE SUPPORTED DIRECTLY FROM THE STRUCTURE ABOVE BY NOT LESS THAN FOUR TAUT #12 GAUGE HANGER WIRES ATTACHED FROM THE TERMINAL OR SERVICE TO THE STRUCTURE ABOVE OR OTHER APPROVED HANGERS.

8. OTHER DEVICES WITHIN THE CEILING

8.01 ALL LIGHTWEIGHT MISCELLANEOUS DEVICES, SUCH AS STROBE LIGHTS, OCCUPANCY SENSORS, SPEAKERS, EXIT SIGNS, ETC., SHALL BE ATTACHED TO THE CEILING GRID. IN ADDITION, DEVICES WEIGHING MORE THAN 10 POUNDS SHALL HAVE A #12 GAUGE SLACK SAFETY WIRE ANCHORED TO THE STRUCTURE ABOVE. DEVICES WEIGHING MORE THAN 20 POUNDS SHALL BE SUPPORTED INDEPENDENTLY FROM THE STRUCTURE ABOVE.

6 TYP SUSPENDED APC NOTES
12" = 1'-0"

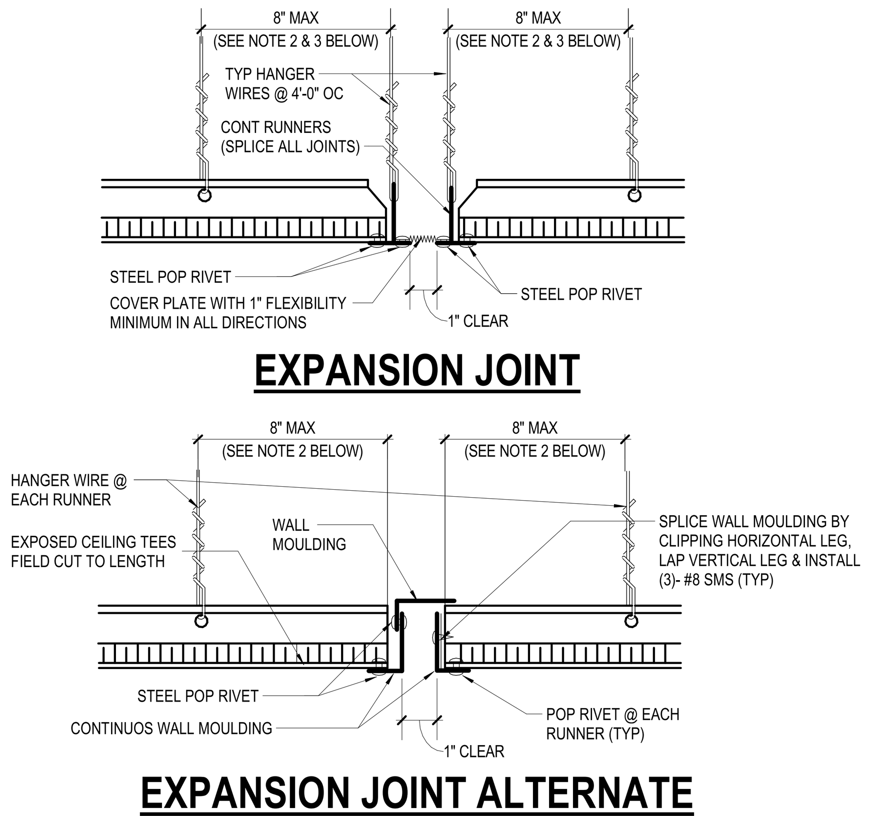

NOTES:
1. DETAIL APPLIES TO EXPANSION JOINTS AT THE INTERSECTION OF CORRIDORS AND AT THE JUNCTIONS OF CORRIDORS AT LOBBIES AND OTHER SIMILAR AREAS.
2. PROVIDE #12 GAGE HANGER WIRES AT THE ENDS OF ALL MAIN AND CROSS RUNNERS WITHIN EIGHT (8) INCHES OF THE SUPPORT OR WITHIN ONE-FOURTH (1/4) OF THE LENGTH OF THE END TEE, WHICHEVER IS LESS, FOR THE PERIMETER OF THE CEILING AREA.
3. PERIMETER WIRES ARE NOT REQUIRED WHEN THE LENGTH OF THE END TEE IS EIGHT (8) INCHES OR LESS.

18 SUSP AC CLG - EXPANSION JNT AT INT
3" = 1'-0" REFERENCE DSA IR 25-2

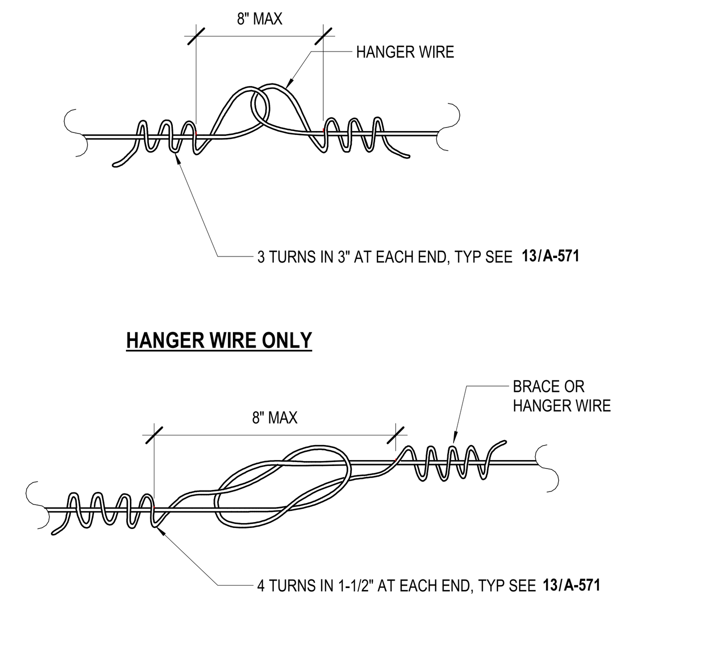

NOTES:
1. WIRE SPLICES ARE SHOWN LOOSELY TIED FOR ILLUSTRATIVE PURPOSES ONLY AND SHALL BE DRAWN TIGHT TO COMPLETE INSTALLATION WHEN CONSTRUCTED.
2. WIRE LOOPS SHALL BE TIGHTLY WRAPPED AND SHARPLY BENT TO PREVENT ANY VERTICAL MOVEMENT OR ROTATION WITHIN THE LOOPS.
3. EACH HANGER AND BRACE WIRE SHALL BE SPLICED NO MORE THAN ONCE ALONG ITS LENGTH.

14 CEILING WIRE SPLICES
3" = 1'-0" REFERENCE DSA IR 25-2

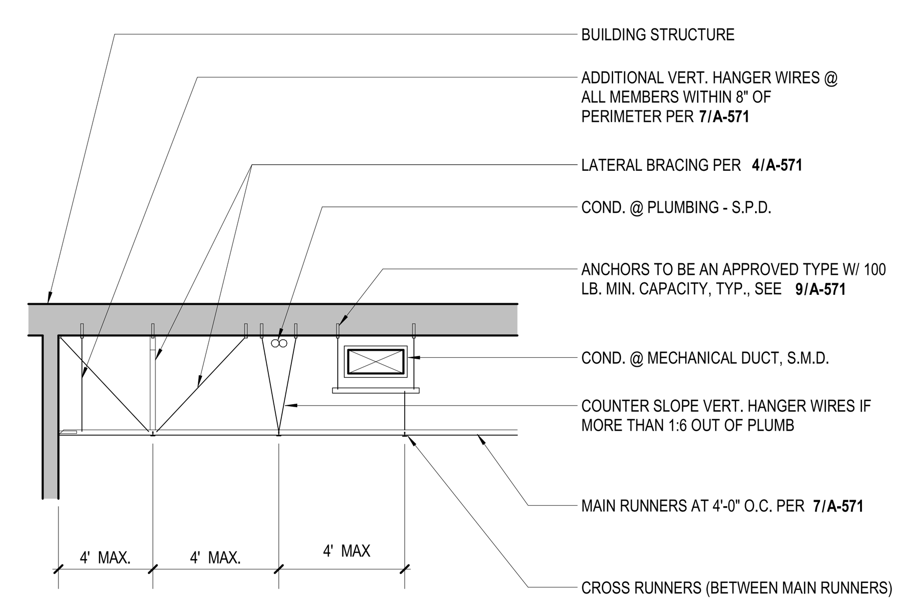

FOR ADDITIONAL REQUIREMENTS SEE 3/A-571
6/A-571
9/A-571

10 A.P.C. INTERFERENCE DETAIL
1/4" = 1'-0"

COMPRESSION STRUT TABLE

EMT COMPRESSION STRUT	MAXIMUM LENGTH
1/2" DIAMETER EMT (0.042" WALL THICKNESS)	3'-11"
3/4" DIAMETER EMT (0.049" WALL THICKNESS)	6'-4"
1" DIAMETER EMT (0.057" WALL THICKNESS)	9'-9"
1 1/4" DIAMETER EMT (0.065" WALL THICKNESS)	12'-9"
1 1/2" DIAMETER EMT (0.065" WALL THICKNESS)	14'-9"
2" DIAMETER EMT (0.065" WALL THICKNESS)	18'-10"

19 COMPRESSION STRUT TABLE
3" = 1'-0" REFERENCE DSA IR 25-2

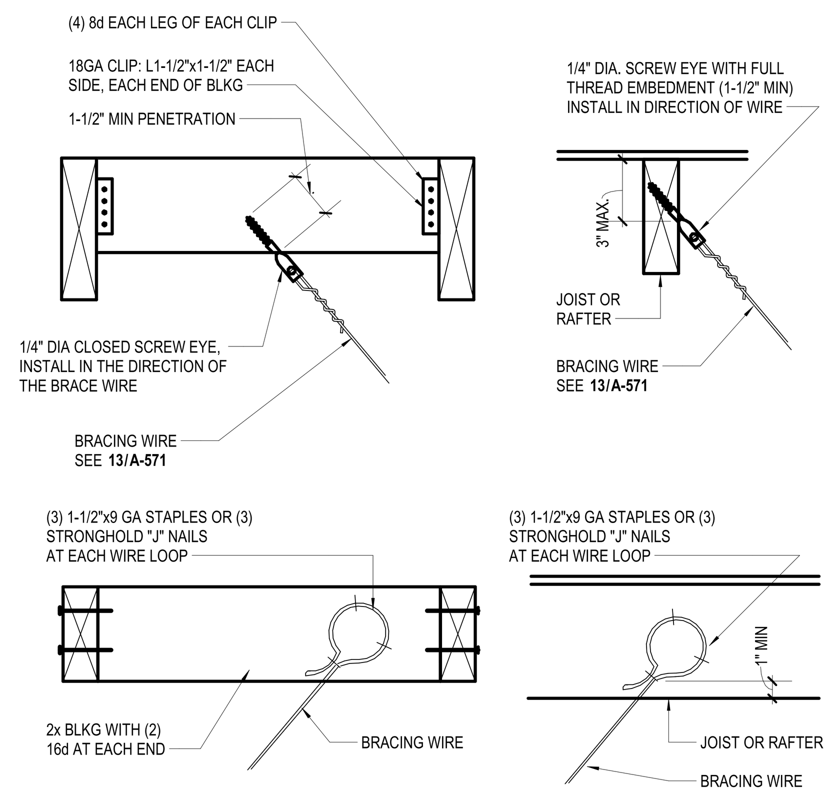

15 BRACING WIRE CONNECT TO SAWN TIMBER
1 1/2" = 1'-0" REFERENCE DSA IR 25-2

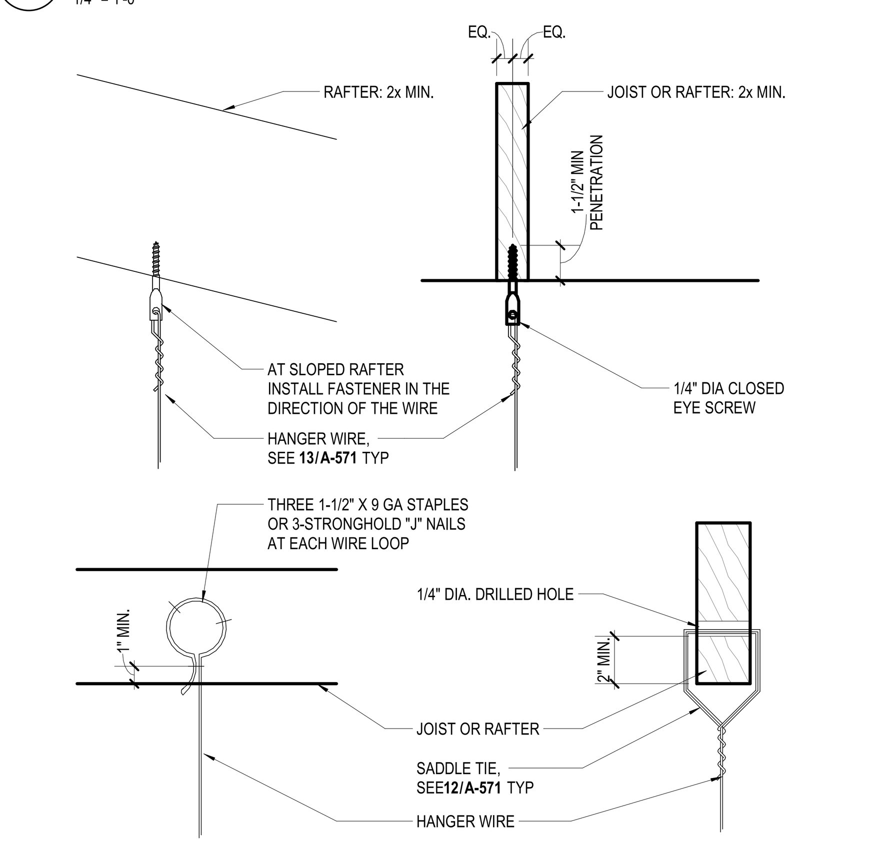

11 HANGER WIRE CONNECT TO SAWN TIMBER
1 1/2" = 1'-0" REFERENCE DSA IR 25-2

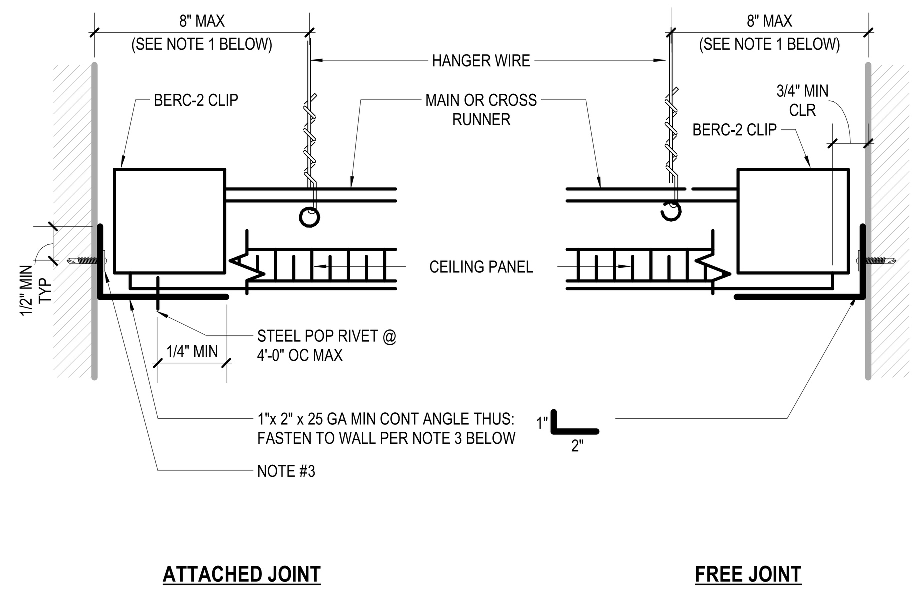

NOTES:
1. PROVIDE #12 GAGE HANGER WIRES AT THE ENDS OF ALL MAIN AND CROSS RUNNERS WITHIN EIGHT (8) INCHES OF THE SUPPORT OR WITHIN ONE-FOURTH (1/4) OF THE LENGTH OF THE END TEE, WHICHEVER IS LESS, FOR THE PERIMETER OF THE CEILING AREA. PERIMETER WIRES ARE NOT REQUIRED WHEN THE LENGTH OF THE END TEE IS EIGHT (8) INCHES OR LESS.
2. NAILS AT ENDS OF HORIZONTAL STABILIZERS ARE TO BE PLACED WITH NAIL HEAD TOWARD CENTER LINE OF SPAN OF STRUT.
3. FASTEN ANGLE TO WALL STUD OR BLOCKING AS FOLLOWS:
A. WOOD STUD WALL: #10x2" LONG WOOD SCREW AT 16" OC MAX.

7 CEILING PERIMETER
3" = 1'-0" REFERENCE DSA IR 25-2
A-571

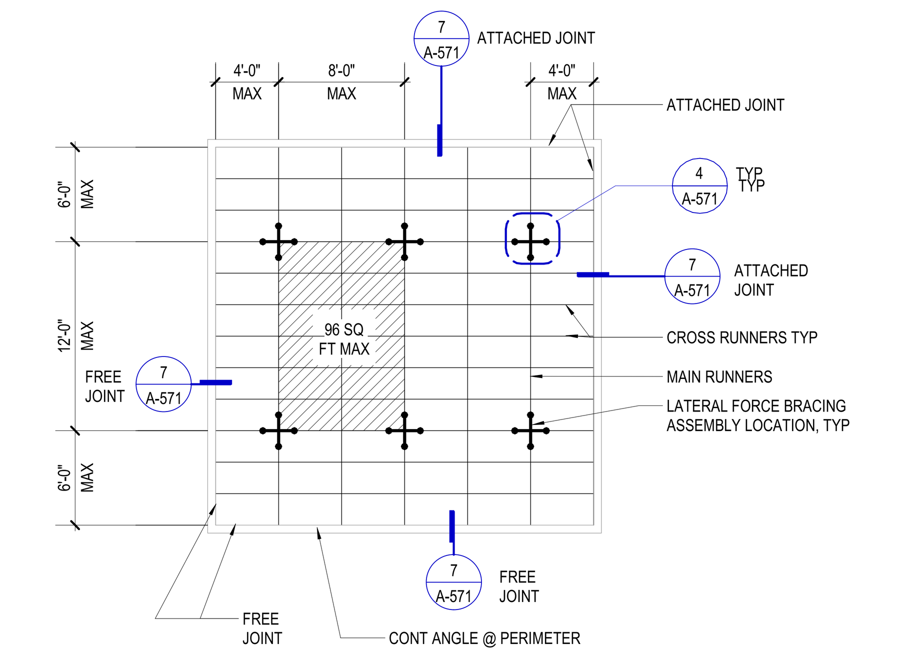

NOTE:
BRACING WIRES AND COMP. STRUT SHALL OCCUR AT EVERY 96 SQ FT MAX IN ROOMS OVER 144 SQ FT

3 TYP CEILING PLAN FOR 8' X 12' SPACING
1/8" = 1'-0" REFERENCE DSA IR 25-2

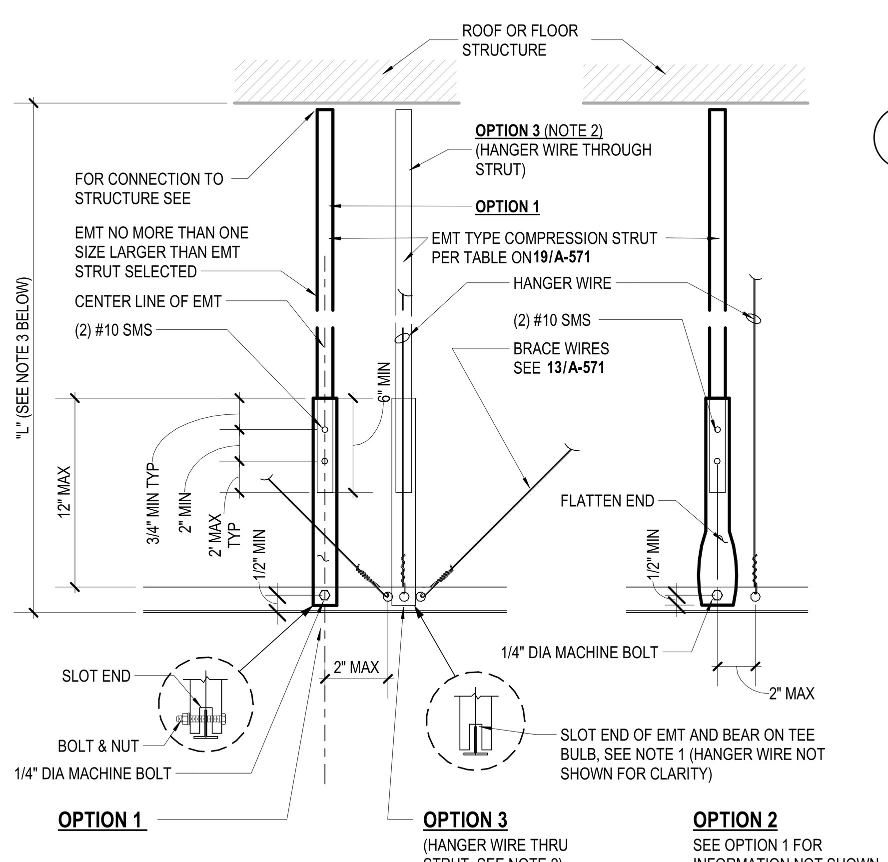

NOTES:
1. MACHINE BOLT IS NOT REQUIRED ON OPTION 3.
2. OPTION 3 IS PERMITTED ONLY WHERE THE ROOF OR FLOOR STRUCTURE IS SAWN TIMBER WITHOUT GYPSUM BOARD.
3. DIMENSION "L" SHALL NOT TO EXCEED THE ALLOWABLE LENGTH GIVEN IN THE TABLE ON 19/A-571 FOR THE COMPRESSION STRUT USED

20 SUSP AC CLG - EMT TYPE STRUT
1 1/2" = 1'-0" REFERENCE DSA IR 25-2

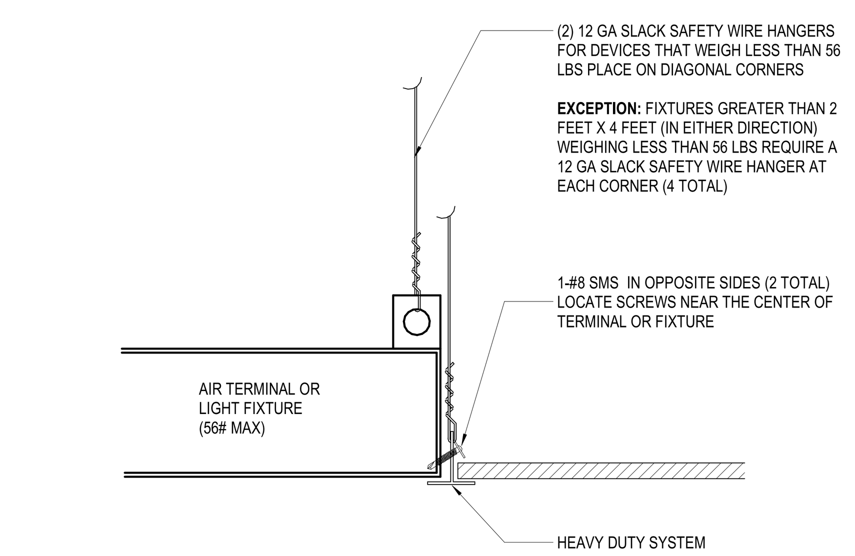

16 SUSP AC CLG - LIGHTS/ AIR TERMINAL SUPP
3" = 1'-0" REFERENCE DSA IR 25-2

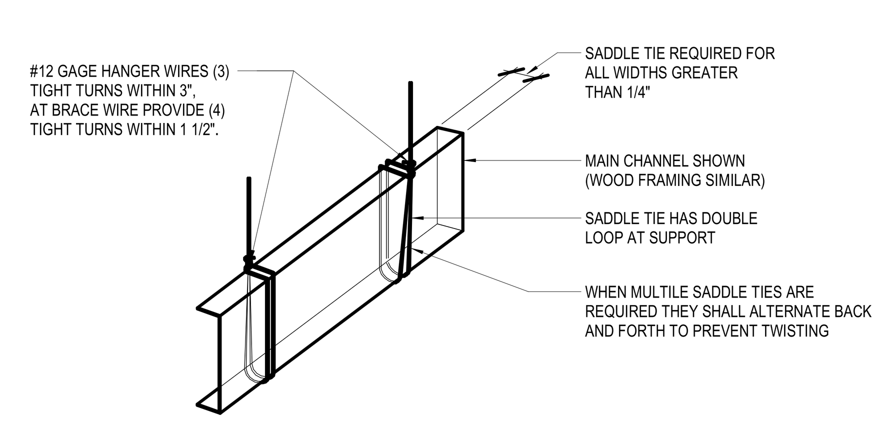

12 TYP SADDLE TIE DETAIL
NTS REFERENCE DSA IR 25-2

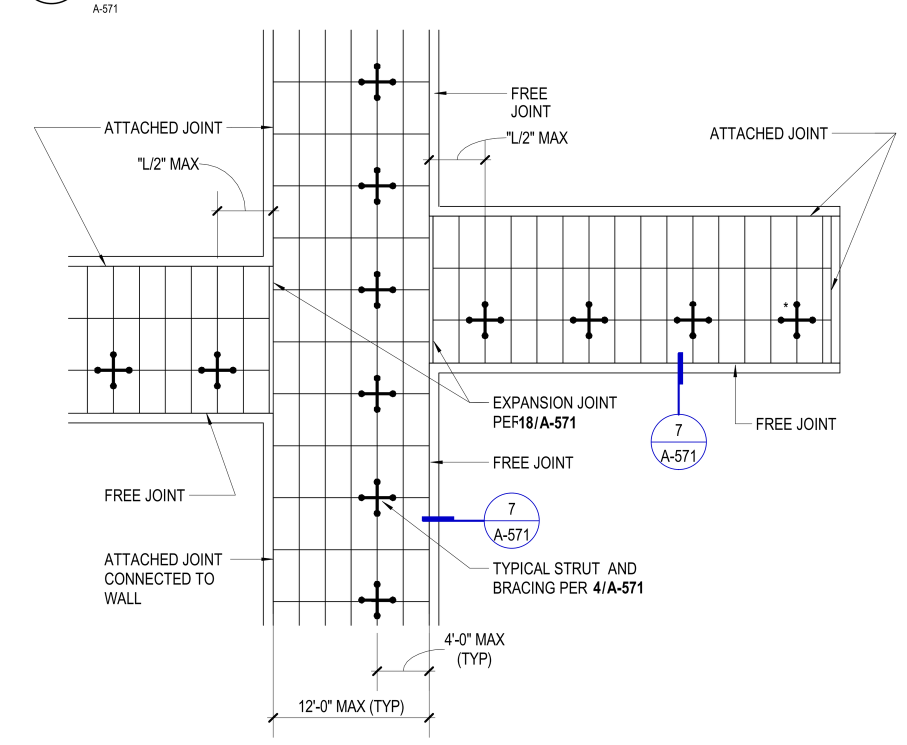

NOTES:
1. "L" IS MAX BRACE ASSEMBLY SPACING PER CEILING PLAN DETAIL, FOR EXAMPLE, WHERE 8' x 12' SPACING IS SPECIFIED, USE "L" = 8'.

8 CORRIDOR CEILING PLAN
3" = 1'-0" REFERENCE DSA IR 25-2

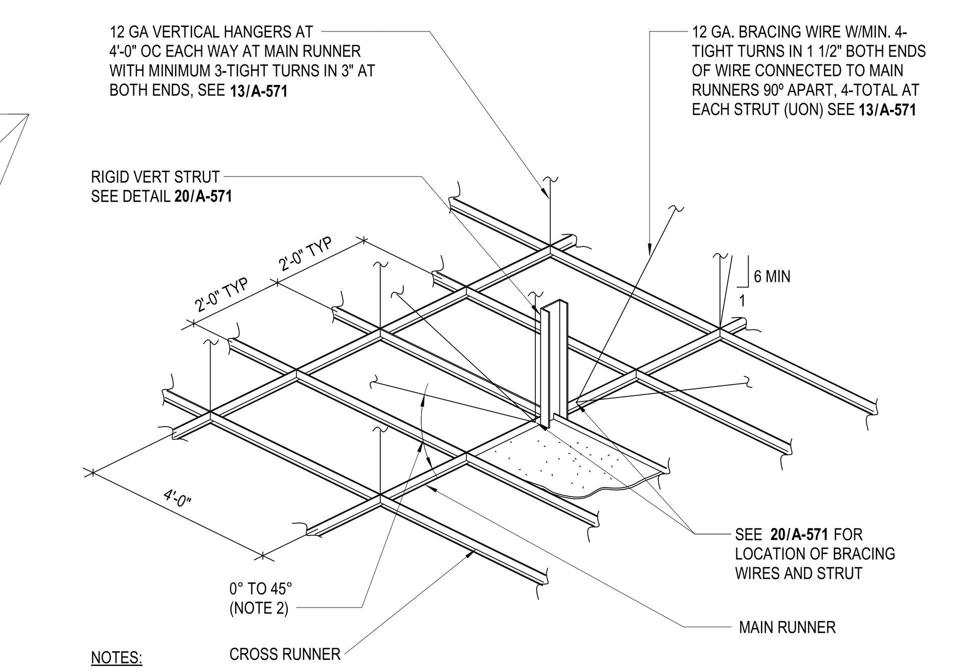

NOTES:
1. STRUTS SHALL NOT REPLACE HANGER WIRES.
2. THE MINIMUM ACCEPTABLE ANGLE IS DETERMINED SUCH THAT THE WIRES DO NOT INTERFERE WITH THE RUNNERS, LIGHT FIXTURES, ETC AND REMAIN STRAIGHT AND UNOBSTRUCTED.

4 SUSP CLG - SUSP & BRACING ASSEMBLY
3" = 1'-0" REFERENCE DSA IR 25-2
A-571

10/4/2023 7:55:42 AM

AGENCY APPROVAL STAMP:
IDENTIFICATION STAMP
DIV. OF THE STATE ARCHITECT
APP: 01-120890 INC:
REVIEWED FOR
SS ☑ FLS ☑ ACS ☑
DATE: 10/25/2023

TLCDARCHITECTURE
520 Third St. #250
Santa Rosa, CA 95401
o: 707.525.5600
f: 707.525.5616
tlcd.com

CONSULTANT:

STAMP:
LICENSED ARCHITECT
CARL SERVAIS
C-32941
REN:12/31/23
STATE OF CALIFORNIA

REVISIONS:

Number	Date	Description

NAPA VALLEY COLLEGE WINE EDUCATION CENTER
2277 NAPA VALLEJO HWY
NAPA, CA 94558

NAPA VALLEY COLLEGE

DSA APPLICATION NUMBER:
01-120890
TLCD PROJECT NUMBER:
21062.00
DATE:
04/12/2023

© THESE DRAWINGS ARE INSTRUMENTS OF SERVICE AND ARE THE SOLE PROPERTY OF TLCD ARCHITECTURE. ANY USE WITHOUT WRITTEN CONSENT IS PROHIBITED.

TYP SUSP APC DETAILS

A-571

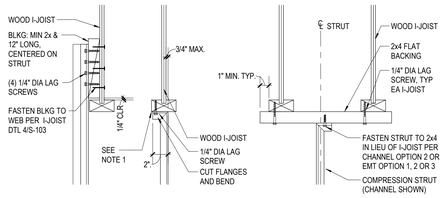

CHANNEL STRUT: OPTION 1 | **CHANNEL STRUT: OPTION 2** | **CHANNEL OR EMT STRUT: BETWEEN I-JOIST**

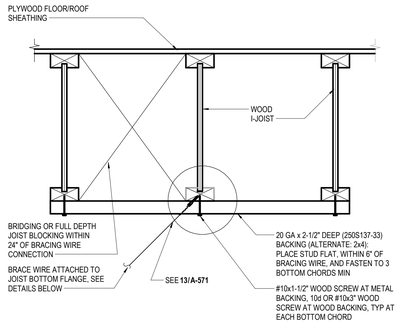

1 D - BRACE WIRE CONNECTION TO WOOD I - JOIST

1/2" = 1'-0"

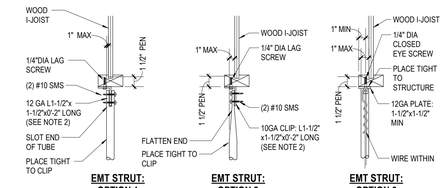

EMT STRUT: OPTION 1 | **EMT STRUT: OPTION 2** | **EMT STRUT: OPTION 3**

NOTES:
1. WEB OF CHANNEL TO BEAR WITHIN WIDTH OF WOOD MEMBER.
2. VERTICAL LEG OF MEMBER TO FALL WITHIN THE WIDTH OF THE WOOD MEMBER.
3. SEE DETAIL.
4. PEN = MINIMUM PENETRATION OF LAG SCREW THREADS INTO THE WOOD MEMBER.
5. NO. 14 WOOD SCREW MAY BE USED IN LIEU OF 1/4" LAG SCREW.

6 STRUT CONNECT TO I JOIST

1 1/2" = 1'-0"

REFERENCE DSA IR 25-2-19 SHEET 5.62

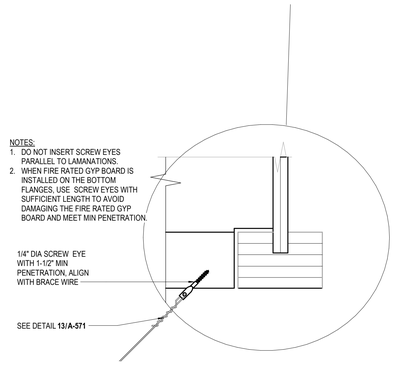

2 BRACE WIRE CONNECT TO WD I - JOIST A

1 1/2" = 1'-0"

REFERENCE DSA IR 25-2-19 SHEET 4.36

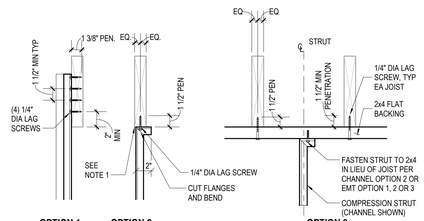

OPTION 1 | **OPTION 2** | **OPTION 3 CHANNEL OR EMT BTWN JOISTS**

CHANNEL STRUT

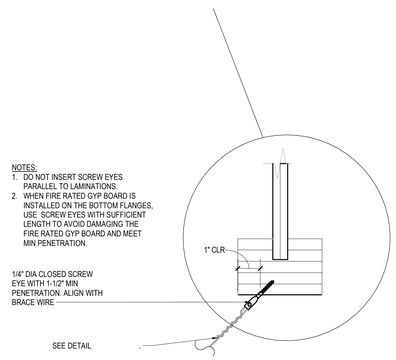

3 BRACE WIRE CONNECT TO WD I - JOIST B

1 1/2" = 1'-0"

REFERENCE DSA IR 25-2-19 SHEET 4.37

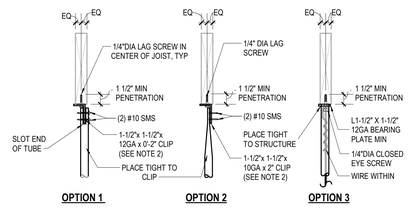

OPTION 1 | **OPTION 2** | **OPTION 3**

EMT STRUT

NOTES:
1. WEB OF CHANNEL TO BEAR WITHIN WIDTH OF WOOD MEMBER.
2. VERTICAL LEG OF MEMBER TO FALL WITHIN THE WIDTH OF THE WOOD MEMBER.
3. PEN = MINIMUM PENETRATION OF LAG SCREW THREADS INTO THE WOOD MEMBER.
4. #14 WOOD SCREW MAY BE USED IN LIEU OF 1/4" LAG SCREW.

8 STRUT CONNECT TO SAWN TIMBER W/O GYP BD

1 1/2" = 1'-0"

REFERENCE DSA IR 25-2-19 SHEET 5.51

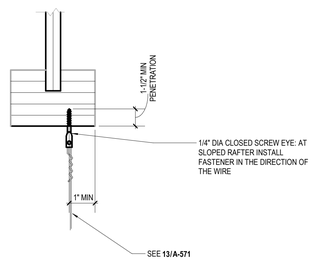

NOTES:
1. WHEN FIRE RATED GYP BOARD IS INSTALLED ON THE BOTTOM FLANGES, USE SCREW EYES W/ SUFFICIENT LENGTH TO AVOID DAMAGING THE FIRE RATED GYP BOARD AND MEET MIN PENETRATION.

4 HANGER WIRE CONNECT TO WD I JOIST

1 1/2" = 1'-0"

REFERENCE DSA IR 25-2-19 SHEET 4.26

AGENCY APPROVAL STAMP:

IDENTIFICATION STAMP
DIV. OF THE STATE ARCHITECT
APP: 01-120890 INC:
REVIEWED FOR
SS ☑ FLS ☑ ACS ☑
DATE: 10/25/2023

TLCDARCHITECTURE
520 Third St. #250
Santa Rosa, CA 95401
o: 707.525.5600
f: 707.525.5616
tlcd.com

CONSULTANT:

STAMP:

LICENSED ARCHITECT
CARL SERTICH
C-32587
REN:12/31/23
STATE OF CALIFORNIA

REVISIONS:

Number	Date	Description

NAPA VALLEY COLLEGE WINE EDUCATION CENTER

2277 NAPA VALLEJO HWY
NAPA, CA 94558

NAPA VALLEY COLLEGE

DSA APPLICATION NUMBER:
01-120890

TLCD PROJECT NUMBER:
21062.00

DATE:
04/12/2023

TYP SUSP APC DETAILS

A-572

© THESE DRAWINGS ARE INSTRUMENTS OF SERVICE AND ARE THE SOLE PROPERTY OF TLCD ARCHITECTURE. ANY USE WITHOUT WRITTEN CONSENT IS PROHIBITED.

10/4/2023 7:55:43 AM

STOREFRONT / CURTAIN WALL TYPES:

NOTE: ALL GLAZING (INTERIOR AND EXTERIOR) IS 1-INCH INSULATED AND TEMPERED.

ALL OPENINGS TO BE FIELD MEASURED PRIOR TO SHOP DRAWINGS AND FABRICATION.

STOREFRONT MANUFACTURER TO DETERMINE IMPLEMENTATION OF DEFLECTION HEAD TRACK AT STOREFRONT WITH STEEL BEAM(S) ABOVE WITH 1/2" DEFLECTION.

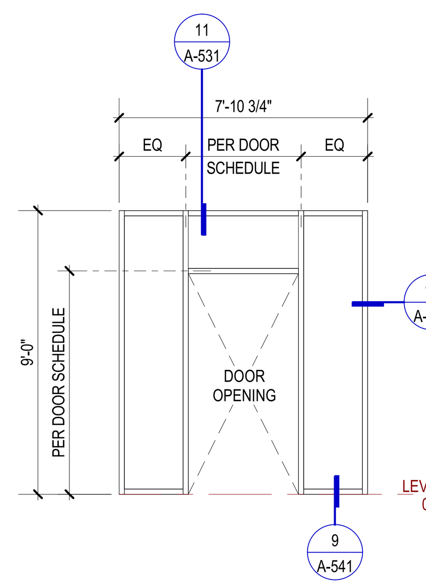

1 STOREFRONT - TYPE A
1/4" = 1'-0"

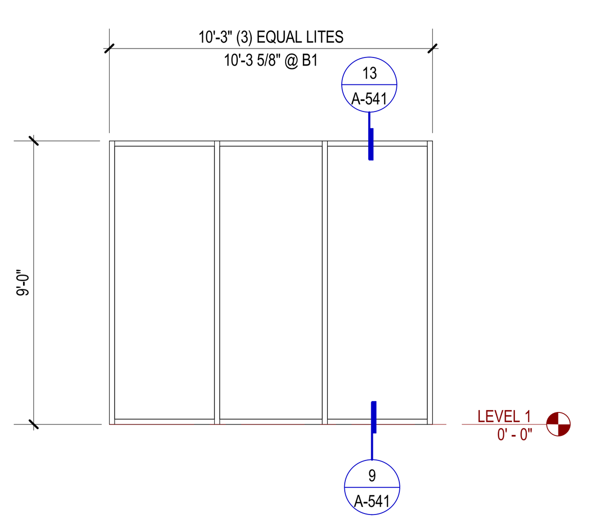

2 STOREFRONT - TYPE B
1/4" = 1'-0"

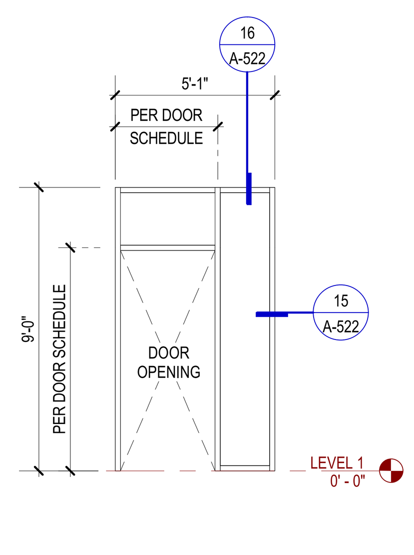

3 STOREFRONT - TYPE C
1/4" = 1'-0"

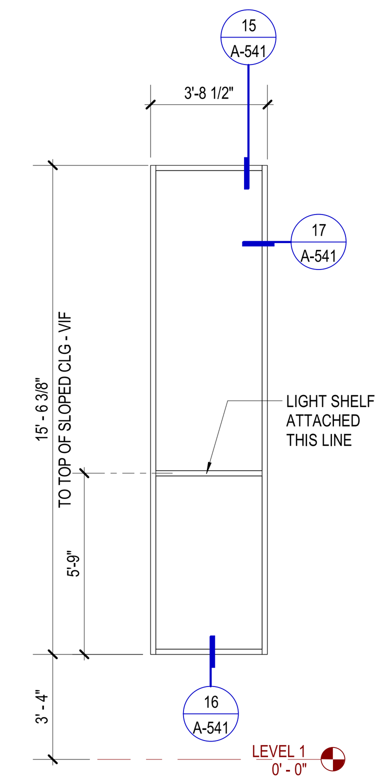

4 CURTAIN WALL - TYPE D
1/4" = 1'-0" LOW-IRON GLAZING

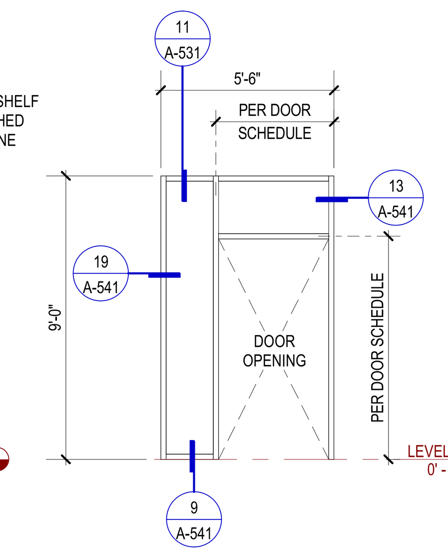

5 STOREFRONT - TYPE E
1/4" = 1'-0"

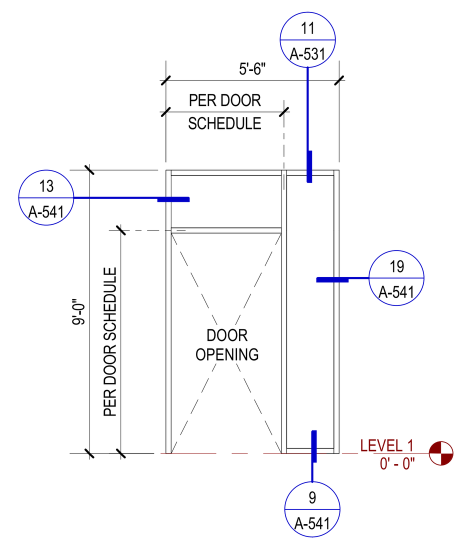

6 STOREFRONT - TYPE F
1/4" = 1'-0"

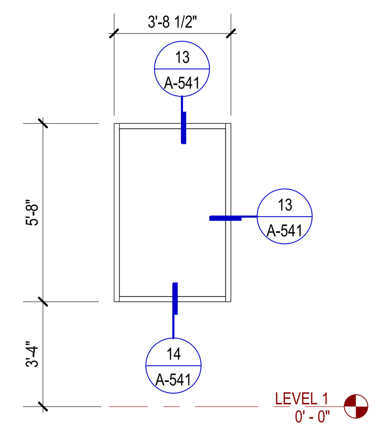

7 STOREFRONT - TYPE G
1/4" = 1'-0" LOW-IRON GLAZING

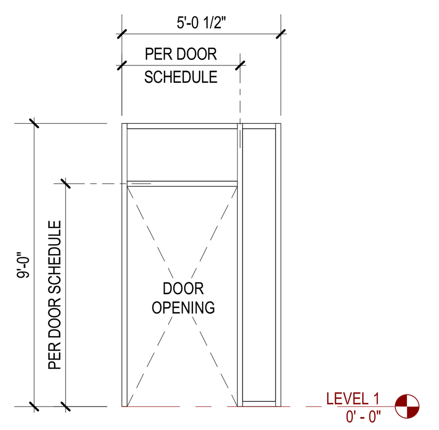

8 STOREFRONT - TYPE H
1/4" = 1'-0"

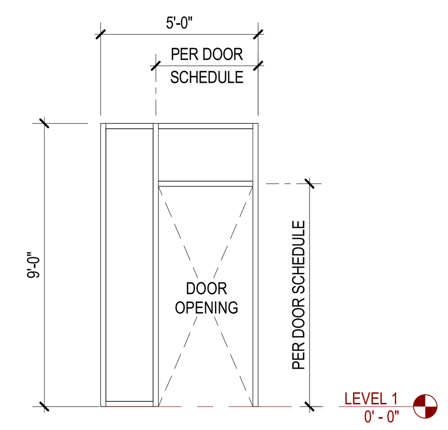

9 STOREFRONT - TYPE J
1/4" = 1'-0"

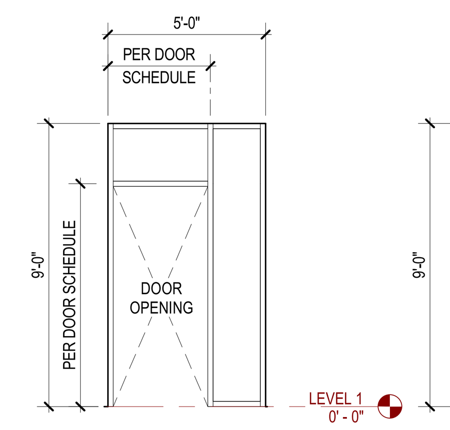

10 STOREFRONT - TYPE K
1/4" = 1'-0"

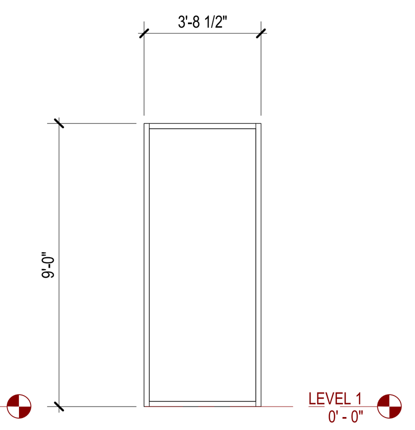

11 STOREFRONT - TYPE Q
1/4" = 1'-0"

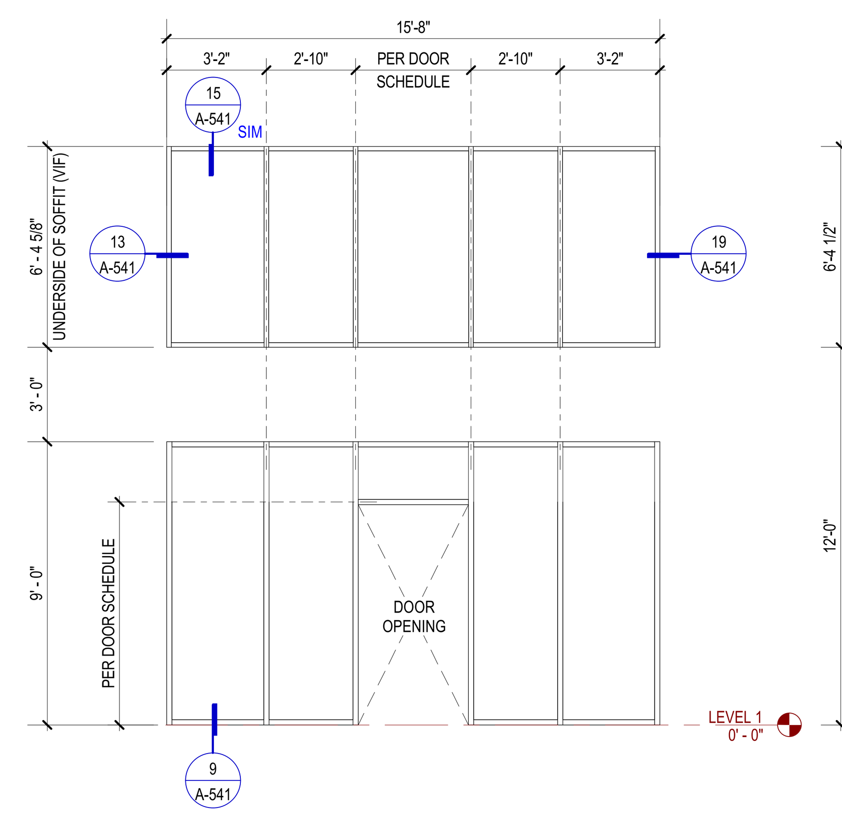

12 STOREFRONT - TYPE L, M (UPPER)
1/4" = 1'-0"

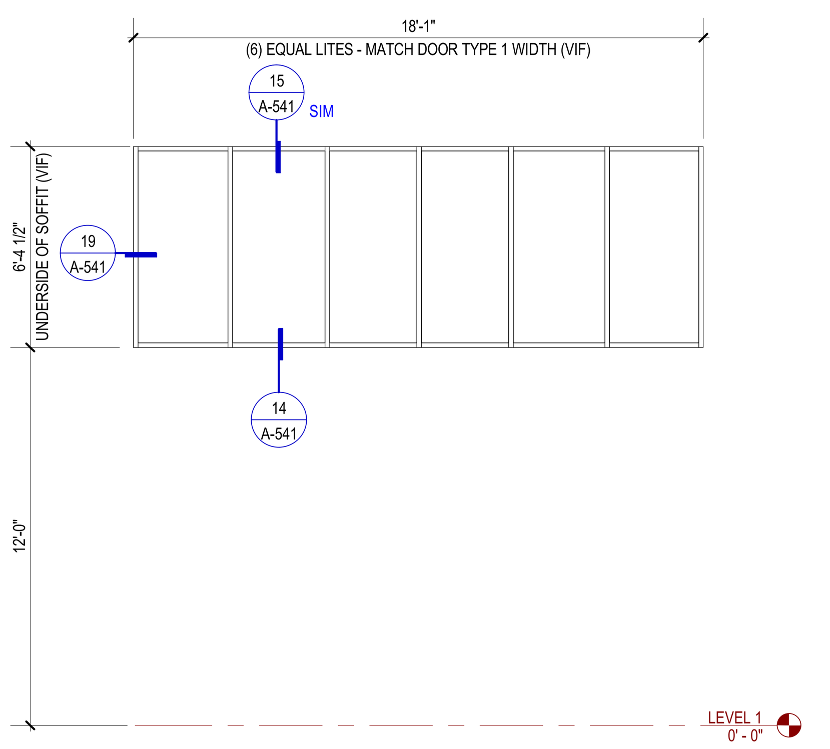

13 STOREFRONT - TYPE N
1/4" = 1'-0"

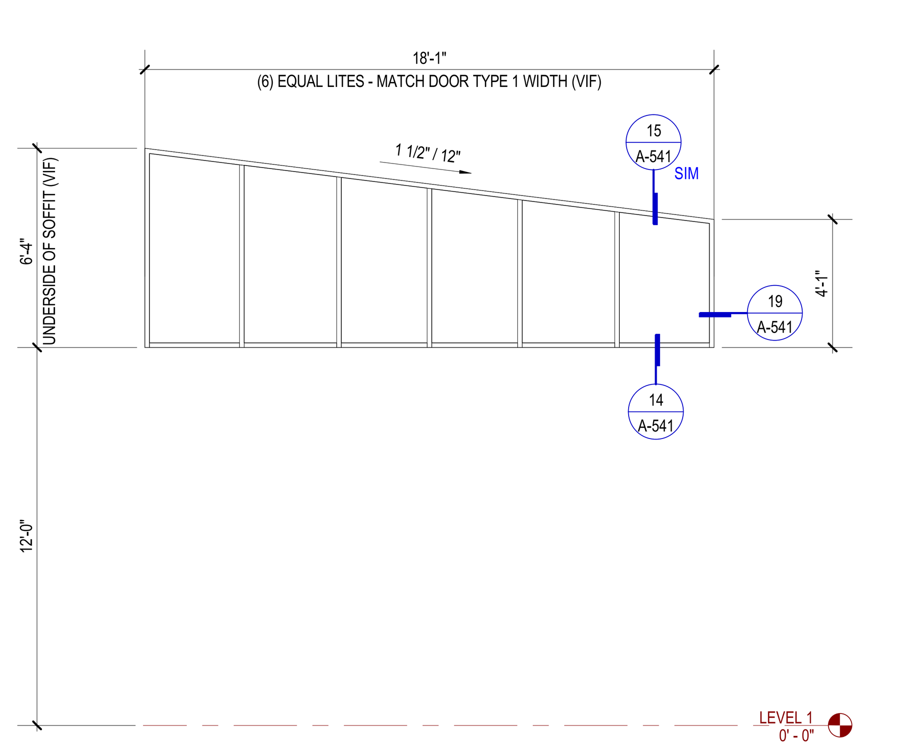

14 STOREFRONT - TYPE P
1/4" = 1'-0"

DOOR & FRAME TYPES:

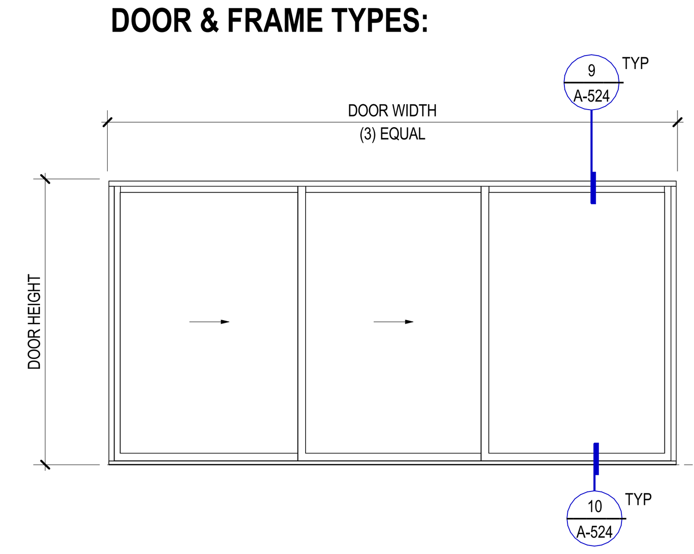

15 DOOR TYPE 1 - SLIDING GLASS WALL
1/4" = 1'-0"

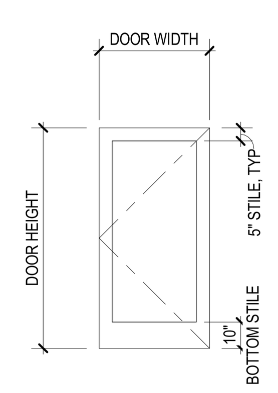

16 DOOR TYPE 2 - STOREFRONT
1/4" = 1'-0"

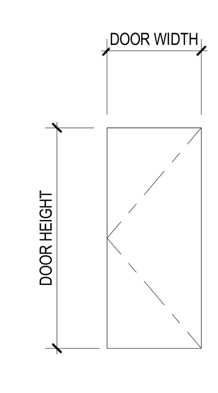

17 DOOR TYPE 3 - FLUSH
1/4" = 1'-0"

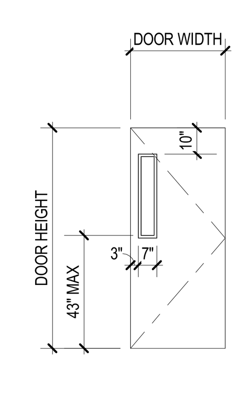

18 DOOR TYPE 4 - FLUSH VISION
1/4" = 1'-0"

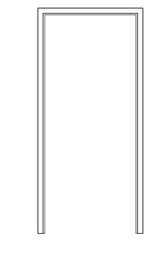

19 FRAME TYPE A - HOLLOW MTL
1/4" = 1'-0"

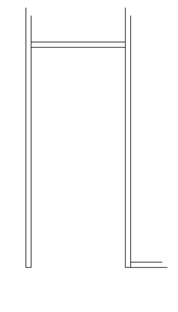

20 FRAME TYPE B - STOREFRONT
1/4" = 1'-0"

ROOM FINISH SCHEDULE - PHASE 1

ROOM NUMBER	ROOM NAME	FLOOR FINISH	BASE	WALL FINISH NORTH	WALL FINISH EAST	WALL FINISH SOUTH	WALL FINISH WEST	CEILING FINISH	COMMENTS
101	HALL	T-3	B-1	P-1	P-1	P-1	P-1	AC-1	
102	OFFICE	CPT-1	B-1	P-1	P-1	P-1	P-1	AC-1	
103	OFFICE	CPT-1	B-1	P-1	P-1	P-1	P-1	AC-1	
104	WINE LAB	RF-1	B-1	P-2/WP-1	P-2	P-2/WP-1	P-2/WP-1	WD-1 / AC-1	WP-1 FINISH AT WEST WALL AT BULKHEAD BELOW SLOPED CEILING
105	LAB PREP	RF-1	B-1	P-2	P-2	P-2	P-2	PGB-1	
106	MECH	C-2	B-1	P-2	P-2	P-2	P-2	PGB-1	
107	WOMEN	T-1	B-2	T-2	T-2	T-2	T-2	PGB-1	
108	MEN	T-1	B-2	T-2	T-2	T-2	T-2	PGB-1	
109	TOILET	T-1	B-2	T-2	T-2	T-2	T-2	PGB-1	
110	CUST	C-2	B-1	P-2	P-2	P-2	P-2	PGB-1	FRP AT MOP SINK - SEE INTERIOR ELEVATIONS
111	ELEC	C-1	B-1	P-2	P-2	P-2	P-2	PGB-1	
112	BDF	RF-2	B-1	P-2	P-2	P-2	P-2	PGB-1	
113	SENSORY CLASSROOM	RF-1	B-1	P-2/WP-1	P-2/WP-1	P-2/WP-1	P-1	WD-1/ AC-1	WP-1 FINISH AT EAST WALL AT BULKHEAD BELOW SLOPED CEILING
114	SENSORY PREP	RF-1	B-1	P-2	P-2	P-2	P-2	PGB-1	FLOOR TILE T-1 AND WALL TILE T-2 AT CART WASH - SEE INTERIOR ELEVATIONS
115	SENSORY CLASSROOM	RF-1	B-1	P-2/WP-1	P-1	P-2/WP-1	P-2/WP-1	WD-1 / AC-1	WP-1 FINISH AT WEST WALL AT BULKHEAD BELOW SLOPED CEILING

ROOM FINISH SCHEDULE - PHASE 2

ROOM NUMBER	ROOM NAME	FLOOR FINISH	BASE	WALL FINISH NORTH	WALL FINISH EAST	WALL FINISH SOUTH	WALL FINISH WEST	CEILING FINISH	COMMENTS
116	HOSPITALITY	T-3	B-3	P-1	P-3	WD-1	P-1	WD-1	PAINT SOFFIT ABOVE BACK BAR TO MATCH WALL; NO BASE AT VGDF WALL
117	PREP	T-3	B-1	P-1	P-1	P-1	P-1	AC-1	

FINISH CODE LIST

CODE	SPECIFICATION	MANUFACTURER	STYLE / COLOR	NOTES
ACOUSTIC WALL PANEL				
WP-1	09 77 20	ARMSTRONG	ACOUSTIBUILT SEAMLESS ACOUSTICAL WALL SYSTEM / ACOUSTIBUILT FINE TEXTURE FINISH PAINT TO MATCH GYP BD WALLS	INSTALL FROM +10'-0" TO WOOD CEILING AT (3) WALLS WITHOUT GLAZED OPENINGS
ARCHITECTURALLY EXPOSED STUCTURAL STEEL				
AESS	05 12 10 / 09 96 70		HIGH PERFORMANCE COATING / CUTOM COLOR MATCH	
BLACKENED STEEL PLATE				
BS-1	05 50 00	-	1/4" BLACKENED STEEL PLATE	WITH BLACK PAN HEAD SCREWS
CARPET				
CPT-1	09 68 10	SHAW CONTRACT	OBSERVE TILE / OPTOMISTIC	10" X 40" PLANK CARPET TILE; ASHLAR INSTALL METHOD
CEILING - LAY-IN ACOUSTICAL PANEL				
AC-1	09 51 00	ARMSTRONG	ULTIMA WITH 15/16" PRELUDE GRID / WHITE	24" X 24" X 5/8" SQ LAY-IN; MINIMUM NRC 0.80; USE KINETICS AF-100 SOUND ISOLATION HANGERS (OR EQUIVALENT) AT CEILING GRID AT WINE LAB 104
CEILING - PAINTED GWB				
PGB-1	09 21 00 / 09 90 00	SHERWIN WILLIAMS	SW 9542 NATURAL WHITE	P-2 PAINT FINISH
CONCRETE - SEALED				
C-1	03 35 15	PROSOCO	CONSOLIDECK LS/LC	TRAFFIC RATED, NON-SLIP
CURTAIN WALL / STOREFRONT				
CW-SF	08 41 00 / 08 44 20	OLDCASTLE	RELIANCE-LT CURTAIN WALL , SERIES 6000 STOREFRONT / 399X440 BRIGHT SILVER	
FIBER REINFORCED PANEL				
FRP	09 77 30	MARLITE	PEBBLED / P100 WHITE	
GLASS-FIBER-REINFORCED-CONCRETE PLANKS				
GFRC-1	07 46 50	RIEDER	OKO SKIN STRIPES / CHROME	MATT, FERRO LIGHT AND FERRO TEXTURES RANDOMLY MIXED; RANDOM HORIZONTAL JOINT STAGGER
LAB CASEWORK				
LC-1	12 35 53	KEWAUNEE SCIENTIFIC	STEEL CASEWORK / 463 IRON ORE LOWERS; 78 SNOW WHITE UPPERS	SEE LABORATORY DRAWINGS SHT LF-003
OPERABLE PARTITION				
OP-1	10 22 00	HUFCOR	SERIES 641 / FRISF TEXTURE, PARCHMENT	
PAINT				
P-1	09 90 00	SHERWIN WILLIAMS	SW 9542 NATURAL WHITE	EGGSHELL
P-2	09 90 00	SHERWIN WILLIAMS	SW 9542 NATURAL WHITE	SEMI-GLOSS
P-3	09 90 00	SHERWIN WILLIAMS	SW7069 IRON ORE	EXTERIOR BOARD AND BATTEN WALLS - EGGSHELL
RESILIENT FLOORING				
RF-1	09 65 20	NORA	NORAPLAN SENTICA / 6525 OCEAN MIST	610mm X 610mm X 3mm TILE, HEAT WELD SEAMS
RF-2	09 65 20	NORA	NORAPLAN SENTICA ED / 6520 SNOW DAY	610mm X 610mm X 3mm TILE, HEAT WELD SEAMS
SOLID SURFACE MATERIAL				
SSM1	12 36 61	CHEMTOPS	1" EPOXY RESIN / LUNAR WHITE	3/4" AT SPLASHES
SSM2		RICHLITE	STRATUM / BAMBOO BLACK DIAMOND	1" THICKNESS, LEATHERED FINISH
STANDING SEAM ROOF PANEL				
SS-1		METAL SALES	MAGNA-LOC / GALVALUME	METAL ROOF TRIM, FASCIA TRIM, GUTTERS, ETC TO MATCH FINISH
TILE				
T-1	09 30 00	CROSSVILLE	OWEN STONE SERIES / BUNNY	2" X 2" PORCELAIN FLOOR TILE, LEATHER FINISH; LATICRETE EPOXY GROUT 89 SMOKE GREY
T-2	09 30 00	DALTILE	ANNAPOLIS GLAZED CERAMIC TILE, 6" X 12" FLAT, MATTE / SAIL AP06	SCHLUTER COVE BASE; LATICRETE EPOXY GROUT 44 BRIGHT WHITE; SCHLUTER SSTL JOLLY AT TILE EDGE, SCHLUTER SSTL FINEC AT OUTSIDE CORNERS
T-3	09 30 00	CROSSVILLE	OWEN STONE SERIES / BUNNY	PORCELAIN FLOOR TILE, 8" X 48" & 6" X 36" PLANKS, LEATHER FINISH, RANDOM STAGGER JOINT; LATICRETE EPOXY GROUT 89 SMOKE GREY
WALL BASE				
B-1	09 65 10	-	-	4" RESILIENT WALL BASE, COLOR TO MATCH WALL
B-2	09 30 00	SCHLUTER	DILEX-EHK / STAINLESS STEEL	FLOOR-TO-WALL COVE BASE TRIM
B-3		-		1/2" X 5" WOOD BASE - PAINT TO MATCH WALL
WOOD PLANK				
WD-1	06 20 00	-	S4S / SATIN CLEAR POLYURETHANE FINISH AT INTERIOR, UV FINISH AT EXTERIOR	5/8 X 8 KILN DRIED VERTICAL GRAIN DOUGLAS FIR BOARDS WITH RABBET EDGE JOINT

DOOR SCHEDULE

NO.	Room Name	WIDTH	HEIGHT	THK.	TYPE	P.H.	HDWR GROUP	MAT'L	GLASS	FRAME TYPE	FRAME MAT'L	SIGNAGE	OPENING FIRE RATING	REMARKS
101A	HALL	3' - 6"	7' - 0"	1 3/4"	2	YES	1.1	ALUM	TEMP	B	ALUM	A, L		STOREFRONT DOOR; LOW ENERGY DOOR OPERATOR
101B	HALL	3' - 0"	7' - 0"	1 3/4"	2	YES	1.0	ALUM	TEMP	B	ALUM	L		STOREFRONT DOOR
102	OFFICE	3' - 0"	7' - 0"	1 3/4"	2		9.0	WD		B	ALUM	M		VERTICAL GRAIN DOUGLAS FIR VENEER WITH SATIN CLEAR FINISH
103	OFFICE	3' - 0"	7' - 0"	1 3/4"	2		9.0	WD		B	ALUM	M		VERTICAL GRAIN DOUGLAS FIR VENEER WITH SATIN CLEAR FINISH
104A	WINE LAB	3' - 0"	7' - 0"	1 3/4"	2	YES	4.0	ALUM	TEMP	B	ALUM	K, M		STOREFRONT DOOR
104B	WINE LAB	3' - 6"	7' - 0"	1 3/4"	2	YES	1.0	ALUM	TEMP	B	ALUM	L		STOREFRONT DOOR
105	WINE PREP	3' - 0"	7' - 0"	1 3/4"	3		11.0	WD		A	HM	M		PAINT DOOR & FRAME TO MATCH WALL - EGGSHELL
106	CLOSET	3' - 0"	7' - 0"	1 3/4"	3		8.0	WD		A	HM	M		PAINT DOOR & FRAME TO MATCH WALL - EGGSHELL
107	WOMEN	3' - 0"	7' - 0"	1 3/4"	3		13.0	WD		A	HM	B, E		PAINT DOOR & FRAME TO MATCH WALL - EGGSHELL; LOW ENERGY DOOR OPERATOR
108	MEN	3' - 0"	7' - 0"	1 3/4"	3		13.0	WD		A	HM	C, F		PAINT DOOR & FRAME TO MATCH WALL - EGGSHELL; LOW ENERGY DOOR OPERATOR
109	TOILET	3' - 0"	7' - 0"	1 3/4"	3		12.0	WD		A	HM	D, G		PAINT DOOR & FRAME TO MATCH WALL - EGGSHELL
110	CUSTODIAL	3' - 0"	7' - 0"	1 3/4"	3		7.0	WD		A	HM	M		PAINT DOOR & FRAME TO MATCH WALL - EGGSHELL
111	ELECTRICAL	3' - 0"	7' - 0"	1 3/4"	3	YES	5.0	WD		A	HM	H, M	90 MIN	PAINT DOOR & FRAME TO MATCH WALL - EGGSHELL
112	BDF	3' - 0"	7' - 0"	1 3/4"	3		7.0	WD		A	HM	M	45 MIN	PAINT DOOR & FRAME TO MATCH WALL - EGGSHELL
113A	SENSORY CLASSROOM	3' - 0"	7' - 0"	1 3/4"	4	YES	6.0	WD	FIRE	A	HM	K, M		VERTICAL GRAIN DOUGLAS FIR VENEER WITH SATIN CLEAR FINISH; CERAMIC COATED FIRE RESISTIVE GLAZING MEETING CPSC CAT II IMPACT SAFETY TEST
113B	SENSORY CLASSROOM	3' - 6"	7' - 0"	1 3/4"	2	YES	1.0	ALUM	TEMP	B	ALUM	L		STOREFRONT DOOR
114A	SENSORY PREP	3' - 0"	7' - 0"	1 3/4"	3		10.0	WD		A	HM	M		PAINT DOOR & FRAME TO MATCH WALL - EGGSHELL
114B	SENSORY PREP	3' - 0"	7' - 0"	1 3/4"	3		10.0	WD		A	HM	M		PAINT DOOR & FRAME TO MATCH WALL - EGGSHELL
114C	SENSORY PREP	3' - 0"	7' - 0"	1 3/4"	3		10.0	WD		A	HM	M		PAINT DOOR & FRAME TO MATCH WALL - EGGSHELL
115A	SENSORY CLASSROOM	3' - 0"	7' - 0"	1 3/4"	4	YES	6.0	WD	FIRE	A	HM	K, M.		VERTICAL GRAIN DOUGLAS FIR VENEER WITH SATIN CLEAR FINISH; CERAMIC COATED FIRE RESISTIVE GLAZING MEETING CPSC CAT II IMPACT SAFETY TEST
115B	SENSORY CLASSROOM	3' - 6"	7' - 0"	1 3/4"	2	YES	1.0	ALUM	TEMP	B	ALUM	L		STOREFRONT DOOR
116A	HOSPITALITY	3' - 6"	7' - 0"	1 3/4"	2	YES	1.1	ALUM	TEMP	B	ALUM	A, L		STOREFRONT DOOR; LOW ENERGY DOOR OPERATOR
116B	HOSPITALITY	18' - 0"	9' - 0"		1		14.0	ALUM	TEMP	MFR	ALUM			SLIDING WALL SYSTEM
116C	HOSPITALITY	18' - 0"	9' - 0"		1		14.0	ALUM	TEMP	MFR	ALUM			SLIDING WALL SYSTEM
116D	HOSPITALITY	3' - 0"	7' - 0"	1 3/4"	3	YES	3.1	HM		A	HM	L		PAINT DOOR & FRAME CUSTOM COLOR TO MATCH RAINSCREEN AT EXTERIOR; INTERIOR CUSTOM COLOR TO MATCH WALL - EGGSHELL
117A	PREP	3' - 0"	7' - 0"	1 3/4"	3		3.0	WD		A	HM	K		PAINT DOOR & FRAME TO MATCH WALL - EGGSHELL
117B	PREP	3' - 6"	7' - 0"	1 3/4"	3		10.0	HM		A	HM	L		PAINT DOOR & FRAME CUSTOM COLOR TO MATCH RAINSCREEN AT EXTERIOR; INTERIOR TO MATCH WALL - EGGSHELL

DOOR SCHEDULE GENERAL NOTES

A. ALL DIMENSIONS ARE TO BE FIELD VERIFIED PRIOR TO FABRICATION, TYP.

B. ALL GLAZING TO BE TEMPERED SAFETY GLAZING PER ANSI Z97.1 OR CPSC 16CFR PART1201.

C. THRESHOLDS AT DOORS REQUIRED TO BE ACCESSIBLE SHALL BE IN CONFORMANCE WITH CBC SEC 11B-404.2.5. THE FLOOR OR LANDING SHALL NOT BE MORE THAN 1/4" LOWER THAN THE THRESHOLD OF THE DOORWAY. CHANGE IN LEVEL BETWEEN 1/4" AND 1/2" SHALL BE BEVELED WITH A SLOPE NO GREATER THAN 1 UNIT VERTICAL TO 2 UNITS HORIZONTAL (50% SLOPE). CHANGE IN LEVEL GREATER THAN 1/2" SHALL BE ACCOMPLISHED BY MEANS OF A RAMP.

D. MAXIMUM CLOSER-EFFORT: 5 lbs. EXTERIOR DOORS AND INTERIOR DOORS. THE AUTHORITY HAVING JURISDICTION MAY INCREASE THE MAXIMUM EFFORT TO OPERATE FIRE DOORS TO ACHIEVE POSITIVE LATCHING, BUT NOT TO EXCEED 15 lbs MAXIMUM.

E. DOOR CLOSERS TO COMPLY WITH CBC 11B-404.2.8.1, CLOSER DELAY TIME; 5 SECONDS TO CLOSE FROM AN OPEN POSITION OF 90 DEGREES TO WITHIN 12 DEGREES OF THE LATCH.

F. WHERE FLUSH BOLTS OCCUR IN THE ACCESSIBLE PATH OF TRAVEL PROVIDE ACCESSIBLE AUTOMATIC FLUSH BOLT.

G. FLOOR MOUNTED DOOR STOPS TO BE INSTALLED AT A MAXIMUM OF FOUR INCHES FROM THE FACE OF WALL OR PARTITION.

H. CONCEAL ALL POWER, CONTROL AND SECURITY CONNECTIONS IN WALLS, CEILINGS, STOREFRONT SYSTEM, CURTAIN WALL SYSTEM OR DOOR FRAMES; EXPOSED CONDUITS OR CONDUCTORS WILL NOT BE ACCEPTED.

I. SIGNAGE TO BE PER DETAIL **8/A-511** & **20/A-511**

J. FOR TYPICAL CONDITIONS AT OPENINGS SEE SHT A-541.

K. FOR TYPICAL CLEARANCES AT DOORS THAT ARE PART OF AN ACCESSIBLE ROUTE, SEE **2/A-511**

L. DOOR SHALL BE OPERABLE FROM INSIDE WITHOUT THE USE OF ANY TOOLS, EFFORT, OR SPECIAL KNOWLEDGE.

AGENCY APPROVAL STAMP:

IDENTIFICATION STAMP
DIV. OF THE STATE ARCHITECT
APP: 01-120890 INC:
REVIEWED FOR
SS ☑ FLS ☑ ACS ☑
DATE: 10/25/2023

TLCDARCHITECTURE
520 Third St. #250
Santa Rosa, CA 95401
o: 707.525.5600
f: 707.525.5616
tlcd.com

CONSULTANT:

STAMP:

LICENSED ARCHITECT
CARL SERVAIS
C-32941
REN:12/31/23
STATE OF CALIFORNIA

REVISIONS:

Number	Date	Description

NAPA VALLEY COLLEGE WINE EDUCATION CENTER

2277 NAPA VALLEJO HWY
NAPA, CA 94558

NAPA VALLEY COLLEGE

DSA APPLICATION NUMBER:
01-120890

TLCD PROJECT NUMBER:
21062.00

DATE:
04/12/2023

© THESE DRAWINGS ARE INSTRUMENTS OF SERVICE AND ARE THE SOLE PROPERTY OF TLCD ARCHITECTURE. ANY USE WITHOUT WRITTEN CONSENT IS PROHIBITED.

ROOM FINISH SCHEDULE, DOOR SCHEDULE, DOOR TYPES & STOREFRONT/CURTAIN WALL TYPES

A-601

10/4/2023 7:55:48 AM

PLUMBING SYMBOLS

SYMBOL	ABBREVIATION	DESCRIPTION
	W	WASTE PIPE ABOVE GRADE
	W, SS	WASTE PIPE BELOW GRADE
	V	VENT PIPE
	CW	COLD WATER PIPE
	HW	HOT WATER PIPE
HWR	HWR	HOT WATER RETURN PIPE
G	G	GAS PIPE
TW	TW	TEMPERED HOT WATER PIPE
		PIPE DEMOLITION
F		FILTERED WATER PIPE
		GATE VALVE
		GLOBE VALVE
		BALL VALVE
		CHECK VALVE
		BALANCING VALVE
	PRV	PRESSURE REDUCING VALVE
	TV	TEMPERING VAVLE
		UNION
		PRESSURE GAUGE AND NEEDLE VALVE
		PUMP
		THERMOMETER
	CO	CLEANOUT
	FCO	FLOOR CLEANOUT
	COTG	CLEANOUT TO GRADE
	HB	HOSE BIBB
		PIPE UP
		PIPE DOWN
		PIPE CONNECTION
	FD	FLOOR DRAIN
A		AQUASTAT
PT	PT	PRESSURE AND TEMPERATURE RELIEF VALVE
	POC	POINT OF CONNECTION
	AFF	ABOVE FINISHED FLOOR
	AFG	ABOVE FINISHED GRADE
	BFF	BELOW FINISHED FLOOR
	CD	CONDENSATE DRAIN
	CFH	CUBIC FEET PER HOUR
	CTE	CONNECT TO EXISTING
	DFU	DRAIN FIXTURE UNITS
	DWV	DRAIN, WASTE AND VENT
	DN	DOWN
	DWG	DRAWING
	(E)	EXISTING
	FW	FILTERED WATER
	IE	INVERT ELEVATION
	IJS	IN JOIST SPACE
	LW	LAB WASTE
	MBH	THOUSAND BTU PER HOUR
	NTS	NOT TO SCALE
	OD	OVERFLOW DRAIN
	PW	PROCESS WASTE
	(RE)	RELOCATE EXISTING
	SD	STORM DRAIN
	SS	SANITARY SEWER
	TP	TRAP PRIMER
	TYP	TYPICAL
	VIF	VERIFY IN FIELD
	VTR	VENT THROUGH ROOF
	WCO	WALL CLEANOUT
	SAD	SEE ARCHITECTURAL DRAWINGS
	SCD	SEE CIVIL DRAWINGS
	SED	SEE ELECTRICAL DRAWINGS
	SFD	SEE FOOD SERVICE DRAWINGS
	SHD	SEE RADIANT HEATING DRAWINGS
	SMD	SEE MECHANICAL DRAWINGS
	SPD	SEE PLUMBING DRAWINGS
	SRD	SEE REFRIGERATION DRAWINGS
	SSD	SEE STRUCTURAL DRAWINGS
	WSFU	WATER SUPPLY FIXTURE UNITS

PLUMBING EQUIPMENT AND CONNECTION SCHEDULE

MARK	ITEM	MAKE / MODEL	DESCRIPTION/ ACCESSORIES	NOTES/ FEATURES	GAS			POWER			PIPE SIZE IN INCHES				
					INPUT	CAPACITY	EFFIENCY	VOLTS	PHASE	AMPS	W	V	CW	HW	TW
AD-1	AREA DRAIN, ACCESSIBLE	ZURN ZN415S-HD, 3" outlet	Floor drain with heavy duty 6x6 square nickel bronze top with 1/4"x1/4" heel proof openings								3	2			
AD-2	AREA DRAIN	ZURN Z525, 4" OUTLET, 9" DIAMETER FLOOR DRAIN, MEDIUM DUTYZ525, 3", CAST IRON BODY AND TOP													
COTG	CLEAN OUT TO GRADE	ZURN Z-1440 (or readily accessible ips adapter on the riser with a threaded plug), provide CHRISTY #F8 box for non traffic area OR #G5 box for traffic area (sidewalks and roads)													
DF-1	DRINKING FOUNTAIN	ELKAY LZWS-EDFPBM217K With bottle filler	Dual level ADA accessible drinking fountain with hands free bottle filling station, wall mounted with mounting frame, stainless steel finish, vandal resistant bubbler, front and side easy touch button. Accessories: Stainless steel access panel, 3000 gallon capacity water filter.	121 LBS				120 V GFCI	1 P	1 A	1-1/2	1-1/2	1/2		
ET-1	EXPANSION TANK	AMTROL ST-12C with HOLDRITE QS-12	6.4 gallon total volume (12" dia x 14", listed for potable service, 250 PSIG, ASME rated, 3/4" NPT stainless steel connection, anit-legionella liner, NSF/ANSI 61 butyl diaphragm, stainless steel mounting bracket.								-	-	-	-	-
ET-2	EXPANSION TANK	AMTROL ST-5C with HOLDRITE QS-5	2.1 gallon total volume (10" dia x 10"), listed for potable service, 250 PSIG, ASME rated, 3/4" NPT stainless steel connection, anit-legionella liner, NSF/ANSI 61 butyl diaphragm, stainless steel mounting bracket.												
EW-1, ES-1, TV-3	EMERGENCY EYE WASH AND SHOWER	See LAB drawings. Fixtures and tempering valve provided by LAB contractor, installed by Plumbing contractor	Emergency eye wash and shower, Tempering valve for eye wash and shower with flow rate of 12 GPM										3/4	3/4	3/4
FCO	FLOOR CLEAN OUT	ZURN ZN-1400	FLOOR CLEAN WITH NICKEL BRONZE TOP												
FD-1	FLOOR DRAIN	ZURN ZN-415B-P, 5" strainer	DURA COATED CAST IRON DRAIN BODY, TYPE B 5" DIAMETER NICKEL BRONZE STRAINER, 1/2" TRAP PRIMER CONNECTION.								3	1-1/2	-	-	-
FS-1	FLOOR SINK	ZURN FD2375, see plan for size. Optional aluminum dome strainer, 1/2 grate	12"x12"x 6"Deep, cast iron construction with acid resistant porcelain enamel interior.								SEE PLAN	1-1/2	-	-	-
GR-1	GAS REGULATOR	PIETRO FIORENTINI 310520PD 3/4", Natural gas, 5-PSI Inlet pressure, 7" WC outlet setpoint.	Gas pressure regulator valve, maximum capacity 946 MBH, 10-PSI max inlet, ANSI Z21.80/CSA 6.22, overpressure protection, outdoor or indoor with integral vent limiter, with filter.	If mounting the regulator in the vertical position, you must use the 90 degree external vent limiter adapter to ensure the vent limiter faces up.											
HB-1	HOSE BIBB	WOODFORD 24P, 3/4"	With non-removable vacuum breaker								-	-	3/4	-	-
HB-2	HOSE BIBB	ZURN Z-1350-CL wall box with keyed lock	Lockable stainless steel wall box, hose bib with non-removable vacuum breaker, removable tee handle										3/4		
HB-3	HOSE BIBB	CHICAGO 293-E27CP, 1/2"	Wall mounted sill with non-removable vacuum breaker, chrome finish										1/2		-
HS-1	SERVICE FAUCET WITH HOSE CONNECTION, ACCESSIBLE	CHICAGO 305-VBCP	Wall mounted service faucet, atmospheric vacuum breaker with 3/4" hose threaded connection, lever handles, polished chrome finish	S-70 nozzle with 20 foot black hose with threaded connectors.									3/4	3/4	
L-1	LAVATORY ADA ACCESSIBLE	SLOAN DSWD-83000 , FAUCET: (3) SLOAN EFX-177	3 STATION LAV WALL MOUNTED LAVATORY. CORIAN/ SILESTONE WITH COLOR SELECTED BY ARCHITECT, SENSOR FAUCETS BATTERY POWERED WITH SOLAR CHARGING, 0.5 GPM (max 10 seconds)								1-1/2	1-1/2	1/2	1/2	1/2
L-2	LAVATORY ADA ACCESSIBLE	SLOAN DSWD-81000, FAUCET: SLOAN EFX-177	WALL MOUNTED LAVATORY, CORIAN SILESTONE WITH COLOR SELECTED BY ARCHITECT, SENSOR FAUCETS BATTERY POWERED WITH SOLAR CHARGING, 0.5 GPM (max 10 seconds)								1-1/2	1-1/2	1/2	1/2	1/2
P-1	PUMP, HOT WATER RECIRCULATION	GRUNDFOS UPS 15-35 SUC/TLC (559896780)	Pump with stainless steel construction, integral check valve, union connections	Set to MED speed for 3 GPM at 5.5 FT TDH, Pump control from EMS system, see control drawings on Mechanical plans				120 V	1 P	1 A, 1/8 HP					
P-2	PUMP, HOT WATER RECIRCULATION	GRUNDFOS UP10-16 PM A BU/LC #98420224	Energy efficient pump with magnet motor, integral check valve, union connections, cord with plug, auto adapt program, snap on line temp sensor.	set at 1 GPM, Pump control from EMS system, see control drawings on Mechanical plans				120 V	1 P	1 A					
RD-1	ROOF DRAIN AND OVERFLOW	ZURN Z-164-EB (OR EQUAL BY JR SMITH), SEE PLUMBING PLANS FOR OUTLET SIZE, PROVIDE -E OVERFLOW EXTENSION and -90 OPTION WHERE NEEDED	12" diameter combination main roof drain and overflow drain with low silhouette cast iron domes (on both main and overflow), includes deck clamp and flashing, extension base (at foam insulated roofs).												
S-1	SINK ADA ACCESSIBLE	Sink and Drain: KOHLER K-5287 "Strive", K-8799. Faucet:: KOHLER K-100770-5ANL-CP "Triton Bowe"	15" x15" x9" Under mount bar sink, 16 gauge stainless steel construction, bottom bowl rack, limited lifetime warranty, drain with strainer, single hole mixing valve faucet, brass construction chrome finish, wing blade handles, 0.5 GPM flow rate.	BRASSCRAFT KT series 1/4 turn brass stop valves. AT ADA units provide TRUBRO LAV GUARD MODEL #103 white with snap clip flush fasteners and covering both angle stops and drain.							2	1-1/2	1/2	1/2	
S-2	SINK ADA ACCESSIBLE	Sink and Drain: KOHLER K-3894 "Vault", K-8801. Faucet:: KOHLER K-22973 -CP "Crue"	24" x18-1/4" x6-1/4" Under mount kitchen sink, 18 gauge stainless steel construction, bottom bowl rack, limited lifetime warranty, drain with strainer, single hole mixing valve faucet, brass construction chrome finish, lever handle, 1.5 GPM flow rate with boost button.	BRASSCRAFT KT series 1/4 turn brass stop valves. AT ADA units provide TRUBRO LAV GUARD MODEL #103 white with snap clip flush fasteners and covering both angle stops and drain.							2	1-1/2	1/2	1/2	
S-3	SINK ADA ACCESSIBLE	Sink and Drain: KOHLER K-5287 "Strive", K-8799. Faucet: KOHLER K-22973 -CP "Crue"	15" x15" x9" Under mount bar sink, 16 gauge stainless steel construction, bottom bowl rack, limited lifetime warranty, drain with strainer, single hole mixing valve faucet, brass construction chrome finish, lever handle, 1.5 GPM flow rate with boost button.	BRASSCRAFT KT series 1/4 turn brass stop valves. AT ADA units provide TRUBRO LAV GUARD MODEL #103 white with snap clip flush fasteners and covering both angle stops and drain.							1-1/2	1-1/2	1/2	1/2	
S-4	DOUBLE BOWL SINK, ACCESSIBLE	Sink and Drain: ELKAY ELUHAD311855, (Qty 2) LKAD35. Faucet: KOHLER K-22973 -CP "Crue"	30-3/4" x18-1/2" X5-3/8" Deep Double bowl sink (note 36" wide cabinet required), type 304 stainless steel under mount, drain with strainer, single hole mixing valve faucet, brass construction chrome finish, lever handle, 1.5 GPM flow rate with boost button.	BRASSCRAFT KT series 1/4 turn brass stop valves. AT ADA units provide TRUBRO LAV GUARD MODEL #103 white with snap clip flush fasteners and covering both angle stops and drain.							2	1-1/2	1/2	1/2	
SK-1A, SK-2A	LAB SINK	See LAB drawings for sink and faucet:	Sink and faucet furnished by Lab equipment vendor installed by plumbing contractor. Provide GEORG FISCHER 375 172 401 polypropylene jar trap, BRASSCRAFT KT series 1/4 turn brass stop valves. Faucet to have vacuum breaker	At ADA units provide TRUBRO LAV GUARD MODEL #103 white with snap clip flush fasteners and covering both angle stops and drain.				120 V	1 P	7.8 A (7/8 HP)	2	1-1/2	1/2	1/2	
SK-2G	LAB SINK with Disposal and Eye wash	INSINKERATOR PRO 880 waste disposer with SinkTop Switch. See LAB drawings for sink, faucet and eye wash	Sink and faucet furnished by Lab equipment vendor installed by plumbing contractor. Provide GEORG FISCHER 375 172 401 polypropylene jar trap, Provide tempered water to eye wash.BRASSCRAFT KT series 1/4 turn brass stop valves. , Garbage disposal with anti-vibration mount and tailpiece, antimicrobial quiet collar sink baffle, sound limiter insulation								2	1-1/2	1/2	1/2	1/2
SK-3	CUP SINK	See LAB drawings for sink and faucet	Sink and faucet furnished by Lab equipment vendor installed by plumbing contractor. Provide GEORG FISCHER 375 172 401 polypropylene jar trap, BRASSCRAFT KT SERIES 1/4 TURN BRASS STOP VALVES. Faucets to have vacuum breakers								1-1/2	1-1/2	(2) @1/2		
SS-1	MOP SINK	FLORESTONE TERRAZZO MODEL 85	MR-371 faucet with vacuum breaker and hose, MR-372 mop hanger, MR-370 hose & clamp, MR-374 wedge-loc drain seal, MR-377 stainless wall panels (2 walls)								3	1-1/2	1/2	1/2	
SV-1	SEISMIC GAS VALVE	PACIFIC SEISMIC PRODUCTS 314 (60), 2" size	Seismic gas shut off valve, horizontal flow, theaded connector, 60 PSI rated.												
TP-1	TRAP PRIMER	PRECISION PLUMBING PRODUCTS PR-500 (OR EQUIVALENT BY MIFAB)		DISTRIBUTION MANIFOLD AS REQUIRED, WITH 1/2" BALL SHUT OFF VALVE							-	-	1/2	-	-
TP-2	TRAP PRIMER, ELECTRONIC	PRECISION PLUMBING PRODUCTS MPB-500-115V (OR EQUIVALENT BY MIFAB)	Electronic Trap primer with electric solenoid, air gap and controller, enclosure box	Distribution manifold as required, with 1/2" ball shut off valve				115 v	1 P	1 A			1/2		
TV-1	TEMPERING VALVE (UNDER SINK)	LEONARD 170-LF, 3/8" tubing connections	LEAD FREE BRONZE BODY WITH INTEGRAL CHECK VALVES, LOCKABLE ADJUSTMENT CAP, 0.25 GPM MIN FLOW RATE., 90-140 F RANGE, ASSE 1017 / 1070 COMPLIANCE.	Set at 110 F.									1/2	1/2	1/2
TV-2	TEMPERING VALVE	CALEFFI 521-09AC, 1/2"	LOW LEAD MIXING VALVE, INTERNAL CHECK VALVES, SWEAT UNION CONNECTIONS, LOCKING SETPOINT KNOB, ADJUSTABLE 85-150 F, ASSE 1017 LISTED, AB1953 LOW LEAD COMPLIANT	SET AT 110 F AND LOCK KNOB											
U-1	URINAL, ACCESSIBLE	KOHLER K-4991-ET "BARDON", WHITE. VALVE: SLOAN "OPTIMA" 186-0.15-ES-S	Wall hung vitreous china, 3/4 top spud, low consumption urinal, mounted to meet ADA requirements, 0.125 GPF flush valve. Accessories: EL-154 120 VAC/24 VAC 50 VA transformer, EL-S18-A electrical box positioning kit					120 V	1	1 A	2	1-1/2	3/4		
WA-1	WATER HAMMER ARRESTOR	SIOUX CHIEF 653-BS, 3/4" SOLDERED CONNECTION (SIZE B, 12-32 WSFU)	Piston type arrestor with sealed charge	No access door required											
WC-1	WATER CLOSET FLUSH VALVE ACCESSIBLE and NON	KOHLER K-4325 "KINGSTON", white . KOHLER K-4731-GC open front seat less cover.	Wall hung flushometer toilet, vitreous china,1.28 GPF, open front seat less lid, bowl to be mounted at ADA accessible height were required to meet ADA accessible requirements (sad for exact height). Accessories: SLOAN "ROYAL" 111-1.28 ES-S sensor flush valve, EL-154 120 VAC/24 VAC 50 VA transformer, EL-485-A electrical box positioning kit. CARRIER: ZURN 1203 wall carrier (or equal by JR SMITH)					120 V	1	1 A	3	2	1		
WCO	WALL CLEAN OUT	ZURN Z-1445 and Z-1468 , with wall cover where exposed.	Cleanout tee with plug, chrome wall cover												
WH-1	WATER HEATER	AO SMITH BTH-250 CYCLONE MXI	100 gallon tank, power vented, sealed combustion, low NOX, microprocessor controlled, wifi connectivity for remote monitoring & control, glass lined tank, foam insulation, 3 year warranty. provide with concentric vent kit	WEIGHT (OPERATING): 1,500 LBS	250 MBH	323 GPH @ 90 F	96% EFF	120 V	1 P	7 A 15 MOCP			1-1/2"	1-1/2"	
WH-2	WATER HEATER	AO SMITH DEL-30S WITH (2) 5 KW	30 gallon tank water heater with direct immersion heating elements, anode rod, press temp safety valve, 3 year tank warranty. Accessories: HOLDRITE 60-SWHP-W wall bracket	WEIGHT: 355 LBS. (OPERATING)				208 V	3 P	30 A			3/4	3/4	

PIPING SCHEDULE

SEE SPECIFICATIONS SECTION 22 00 00 FOR COMPLETE REQUIREMENTS

SYSTEM	LOCATION	SIZE	PIPE	FITTINGS	JOINTS
SANITARY WASTE, VENT, STORM DRAIN	ALL	ALL	SCH 40 PVC PLASTIC (SOLID CORE WALL, ASTM D 2665)	SCHEDULE 40 PVC-DWV	PVC PRIMER AND GLUED
LAB WASTE (LW)	BURIED	ALL	SCH 40 CPVC PLASTIC (SOLID CORE WALL, ASTM D 2665)	SCHEDULE 40 CPVC-DWV	PVC PRIMER AND GLUED
CONDENSATE WASTE AND OVERFLOW	ALL	3/4" AND 1"	TYPE M COPPER HARD DRAWN	WROT COPPER	100% LEAD FREE SOLDER or PROPRESS
DOMESTIC WATER (CW, HW, AND TW)	BURIED	ALL	TYPE K COPPER	WROT COPPER	SILVER SOLDER
	ALL ABOVE GROUND	ALL	TYPE L COPPER HARD DRAWN	SILVER BRAZED OR VIEGA PRESSED COPPER FITTINGS	SILVER BRAZED OR VIEGA PROPRESS SYSTEM PRESSED COPPER FITTINGS
FILTERED WATER (FW)	ALL	ALL	GEORG FISCHER.PROGEF NATURAL PP, SCH 40 POLYPROPYLENE	GEORG FISCHER PROGEF NATURAL PP, SCH 40	BCF PLUS FUSION WELDED
NATURAL GAS	BURIED OUTSIDE BUILDING	ALL	POLYETHYLENE	POLYETHYLENE	FUSION WELDED
	INDOORS	4" AND SMALLER	SCHEDULE 40 BLACK IRON STEEL	150 LBS. MALLEABLE IRON	SCREWED FITTINGS
	OUTDOORS	4" AND SMALLER	SCHEDULE 40 GALVANIZED STEEL	150 LBS. MALLEABLE IRON	SCREWED FITTINGS

PLUMBING GENERAL NOTES

1. SLOPE OF SANITARY SEWER PIPING SHALL BE MINIMUM 1/4" PER FOOT IN ACCORDANCE WITH CPC 718.1, UNLESS NOTED OTHERWISE.
2. INSTALLATION INSTRUCTIONS FOR ALL LISTED EQUIPMENT SHALL BE PROVIDED TO THE FIELD INSPECTOR AT TIME OF INSPECTION. CMC 302.2
3. EACH FIXTURE DISCHARGING INTO A GREASE INTERCEPTOR SHALL BE INDIVIDUALLY TRAPPED AND VENTED IN AN APPROVED MANNER, PER CPC 1014.1.1.
4. PIPING HANGERS AND SUPPORTS SHALL COMPLY WITH CPC TABLE 313.1.
5. REFER TO ARCHITECTURAL DRAWINGS FOR EXACT LOCATIONS OF PLUMBING FIXTURES, FIXTURE MOUNTING HEIGHTS AND FLOOR DRAIN LOCATIONS.
6. PLUMBING FIXTURES AND INSTALLATIONS THAT SERVE PUBLIC BUILDINGS SHALL COMPLY WITH CBC SECTION 11B-213 "ACCESSIBILITY TO PUBLIC BUILDINGS, BATHING AND TOILET FACILITIES" SEE ARCHITECTURAL DRAWINGS FOR INSTALLATION DETAILS.
7. ALL PLUMBING FIXTURES SHALL COMPLY WITH WATER CONSERVATION REQUIREMENTS OF CALIFORNIA ENERGY CODE (TITLE 24), AND THE CALIFORNIA GREEN CODE MANDATORY MEASURES. PERFORMANCE CALCULATIONS MAY BE PROVIDED IN LIEU OF PRESCRIPTIVE REQUIREMENTS SHOWN BELOW. IF VOLUNTARY TIER-1 OR TIER-2 MEASURES ARE REQUIRED A SEPARATE PERFORMANCE CALCULATION MUST BE PROVIDED TO SHOW COMPLIANCE.

COMMERCIAL PROJECTS (TIER 1: 12% REDUCTION)

A. SHOWERS TO BE 1.8 GPM AT 80 PSI. NOT MORE THAN ONE HEAD AT A TIME PER SHOWER
B. LAVATORY FAUCETS TO BE 0.35 GPM @ 60 PSI
C. KITCHEN FAUCETS TO BE 1.6 GPM @ 60 PSI
D. METERING FAUCETS TO BE 0.18 GALLONS / CYCLE
E. WATER CLOSETS TO BE 1.12 GALLONS PER FLUSH (FOR DUAL FLUSH AVERAGE OF 2 REDUCED FLUSH AND 1 FULL FLUSH)
F. URINALS TO BE 0.125 GALLONS PER FLUSH

10. ALL PIPING SHALL BE CONCEALED UNLESS SPECIFICALLY INDICATED OTHERWISE.
11. PHYSICALLY VERIFY ELEVATION OF SEWER CONNECTION AND EXACT LOCATION BEFORE STARTING ANY WORK.
12. SEISMIC SUPPORT AND BRACING FOR ALL PIPING SHALL BE INSTALLED IN ACCORDANCE WITH CBC CHAPTER 16A. STANDARDS FOR SUPPORT AND ANCHORAGE METHOD AND MATERIALS PUBLISHED BY SMACNA AND APPROVED BY THE STATE AGENCIES MAY BE USED.
13. INSTALL ALL FLOOR SINKS FLUSH WITH FINISHED FLOOR UNLESS OTHERWISE NOTED. INDIRECT WASTE RECEPTACLES SHALL BE LOCATED WHERE THEY ARE READILY VISIBLE FOR INSPECTION & CLEANING PER CPC 804.1.
14. PLUMBING CONTRACTOR SHALL COMPLETE TITLE 24 CERTIFICATE OF INSTALLATION (NRCI-PRC) AND CERTIFICATE OF ACCEPTANCE (NRCA-PRC) FORMS PRIOR TO COMPLETION OF CONSTRUCTION AND SUBMIT TO THE ENGINEER FOR APPROVAL.
15. REFER TO SPECIFICATION SECTION 22 00 00 FOR ADDITIONAL REQUIREMENTS.

PLUMBING MATERIALS SCHEDULE

SEE SPECIFICATIONS SECTION 22 00 00 FOR COMPLETE SPECIFICATIONS AND REQUIREMENTS

ITEM	PRODUCT
GAS RISER & TRANSITION	GEORGE FISHER PE2406/PE2708, PE3408/PE4710 (or approved equivalent by CENTRAL) anodeless prefabricated one piece polyethylene with epoxy boned steel carrier ASTM D2513 CAT 1 and ASTM F11973 LISTED
PIPING HANGERS & SUPPORTS	PIPING SUPPORT SYSTEMS: Strut: SUPER-STRUT 1400 "GOLDGALV", 14 gauge, 0.5 MIL electrogalvanized plated galvanized coating. All strut bolt, nuts, washers and hardware to be zinc electroplated finish. All rods, bolts, nuts and washers to be cadmium electroplated finish. (or equivalent by B-LINE or TOLCO) J HANGERS: B-LINE B3690F (or equivalent by SUPER-STRUT or TOLCO)
PIPE ISOLATORS	At copper piping: HUBBARD HOLDRITE series 261-264, 271 (or equivalent by ACOUSTO-PLUMB). At metal and concrete structures: series 121 and 125 with 40x-R inserts at fire rated penetrations. At larger pipes: TRISOLATOR pipe sleeves used with metal pipe clamps and hangers.
PIPE INSULATION	All HW, HWR, TW, TWR piping: OWENS CORNING type SSL-II with ASJ Max service jacket, min 1-1/2" wall thickness (for nominal pipe diameters 2" and smaller), PVC fitting covers.
PIPE INSULATION JACKETING	PROTO or SPEEDLINE 20 mil thick PVC jacket and fitting covers, color white.
PIPE ROOF FLASHING	At built up roofing: 4 pound lead with 12x12 base flashing, stainless steel draw band. At metal roofing: DEKTITE PREMIUM EPDM with flexible base, 20 year warranty.
STOP VALVES	BRASSCRAFT S-KTS chrome plated brass with 1/4 turn ball valve with lock shield and loose key.
SUPPLY RISERS	BRASSCRAFT (or approved equivalent) one piece chrome plated copper with brass compression fittings bent with tubing bender. Do not provide excess length, just enough length will slight slack.
SINK / LAV TAILPIECE	KEENEY (or approved equivalent) 17 gauge tub brass with heavy duty chrome finish
LAB SINK TRAPS	GEORG FISCHER 375 172 401 polypropylene with removable jar trap
ADA PIPE WRAPS	TRUBRO LAV GUARD model #103 white with snap clip flush fasteners and covering both angle stops and drain.
PRESSURE GAUGES	TREICE 600CB with 3-1/2" dial and 160 PSI range provide with 1/4" brass needle valve NVII-1B by DWYER
TEMPERATURE GAUGES	MILJOCO CDX-93585 or CDX-96085 (on larger pipes) installed in brass thermo well extended past insulation and clear protective display cover.
VALVES, WATER	Ball valves 4" and smaller, APOLLO 70LF-100 or 70LF-200 series, UL 258 listed AGA/CGA/UL/FM approved (or equivalent by NIBCO, JOMAR or MILWAUKEE)
VALVES, GAS	Exterior bldg shut off: JOMAR 175LWN ball valves. All other gas valves: 1 inch or smaller JOMAR T-205, 1-1/4" to 4" JOMAR T-100E (or equivalent by APOLLO or NIBCO)
VALVES, CHECK	3 inch or smaller, T-pattern swing check valves: MILWAUKEE UP548T or UP1548T (or equivalent by APOLLO, JOMAR or NIBCO)
ACCESS DOORS, CEILING AND WALLS	At wall cleanouts: ZURN Z1468 round chrome finish cover, provide ZS1446 round stainless steel finish at tile surfaces. Wall & ceilings, tile and wood surfaces: ELMDOR DW-SS, 16 gauge type 304 brushed stainless steel with keylock, minimum size 10x10. Wall & ceilings, gypsum surfaces: ACCESS PANEL SOLUTIONS BAUCO PLUS II with keylock, minimum size 10x10. Wall & ceilings, fire rated: ELMDOR FRC or FR, minimum size 10x10.
PIPE MARKERS	SETON Opti-Code (or equivalent by MSI), self-adhesive OSHA and ASME (ANSI) standard A13.1-2007.
EQUIPMENT NAMEPLATES	SETON custom engraved acrylic (plastic), black with white border, 3" wide by 1" high with minimum 1/4" lettering.

MEP COMPONENT ANCHORAGE NOTE

ALL MECHANICAL, PLUMBING, AND ELECTRICAL COMPONENTS SHALL BE ANCHORED AND INSTALLED PER THE DETAILS ON THE DSA APPROVED CONSTRUCTION DOCUMENTS. THE FOLLOWING COMPONENTS SHALL BE ANCHORED OR BRACED TO MEET THE FORCE AND DISPLACEMENT REQUIREMENTS PRESCRIBED IN THE 2022 CBC, SECTIONS 1617A.1.18 THROUGH 1617A.1.26 AND ASCE 7-16 CHAPTERS 13, 26 AND 30.

1. ALL PERMANENT EQUIPMENT AND COMPONENTS.
2. TEMPORARY, MOVABLE OR MOBILE EQUIPMENT THAT IS PERMANENTLY ATTACHED (e.g. HARD WIRED) TO THE BUILDING UTILITY SERVICES SUCH AS ELECTRICITY, GAS OR WATER. "PERMANENTLY ATTACHED" SHALL INCLUDE ALL ELECTRICAL CONNECTIONS EXCEPT PLUGS FOR 110/220 VOLT RECEPTACLES HAVING A FLEXIBLE CABLE.
3. TEMPORARY, MOVABLE OR MOBILE EQUIPMENT WHICH IS HEAVIER THAN 400 POUNDS OR HAS A CENTER OF MASS LOCATED 4 FEET OR MORE ABOVE THE ADJACENT FLOOR OR ROOF LEVEL THAT DIRECTLY SUPPORT THE COMPONENT IS REQUIRED TO BE RESTRAINED IN A MANNER APPROVED BY DSA.

THE FOLLOWING MECHANICAL AND ELECTRICAL COMPONENTS SHALL BE POSITIVELY ATTACHED TO THE STRUCTURE BUT NEED NOT DEMONSTRATE COMPLIANCE WITH THE REFERENCES NOTED ABOVE. THESE COMPONENTS SHALL HAVE FLEXIBLE CONNECTIONS PROVIDED BETWEEN THE COMPONENT AND ASSOCIATED DUCTWORK, PIPING, AND CONDUIT. FLEXIBLE CONNECTIONS MUST ALLOW MOVEMENT IN BOTH TRANSVERSE AND LONGITUDINAL DIRECTIONS:

A. COMPONENTS WEIGHING LESS THAN 400 POUNDS AND HAVE A CENTER OF MASS LOCATED 4 FEET OR LESS ABOVE THE ADJACENT FLOOR OR ROOF LEVEL THAT DIRECTLY SUPPORT THE COMPONENT.
B. COMPONENTS WEIGHING LESS THAN 20 POUNDS, OR IN THE CASE OF DISTRIBUTION SYSTEMS, LESS THAN 5 POUNDS PER FOOT, WHICH ARE SUSPENDED FROM A ROOF OR FLOOR OR HUNG FROM A WALL.

THE ANCHORAGE OF ALL MECHANICAL, ELECTRICAL, AND PLUMBING COMPONENTS SHALL BE SUBJECT TO THE APPROVAL OF THE DESIGN PROFESSIONAL IN GENERAL RESPONSIBLE CHARGE OR STRUCTURAL ENGINEER DELEGATED RESPONSIBILITY AND ACCEPTANCE BY DSA. THE PROJECT INSPECTOR WILL VERIFY THAT ALL COMPONENTS AND EQUIPMENT HAVE BEEN ANCHORED IN ACCORDANCE WITH ABOVE REQUIREMENTS.

PIPING, DUCTWORK AND ELECTRICAL DISTRIBUTION SYSTEM BRACING NOTE

PIPING, DUCTWORK, AND ELECTRICAL DISTRIBUTION SYSTEMS SHALL BE BRACED TO COMPLY WITH THE FORCES AND DISPLACEMENTS PRESCRIBED IN ASCE 7-16 SECTION 13.3 AS DEFINED IN ASCE 7-16 SECTION 13.6.5, 13.6.6, 13.6.7, 13.6.8, AND 2022 CBC, SECTIONS 1617A.1.24, 1617A.1.25 AND 1617A.1.26.

THE METHOD OF SHOWING BRACING AND ATTACHMENTS TO THE STRUCTURE FOR THE IDENTIFIED DISTRIBUTION SYSTEM ARE AS NOTED BELOW. WHEN BRACING AND ATTACHMENTS ARE BASED ON A PREAPPROVED INSTALLATION GUIDE (e.g., OSHPD OPM FOR 2013 CBC OR LATER), COPIES OF THE BRACING SYSTEM INSTALLATION GUIDE OR MANUAL SHALL BE AVAILABLE ON THE JOBSITE PRIOR TO THE START OF AND DURING THE HANGING AND BRACING OF THE DISTRIBUTION SYSTEMS. THE STRUCTURAL ENGINEER OF RECORD SHALL VERIFY THE ADEQUACY OF THE STRUCTURE TO SUPPORT THE HANGER AND BRACE LOADS.

MECHANICAL PIPING (MP), MECHANICAL DUCTS (MD), PLUMBING PIPING (PP), ELECTRICAL DISTRIBUTION SYSTEMS (E):

MP[X] MD[ ] PP[X] E[ ] OPTION 1: DETAILED ON THE APPROVED DRAWINGS WITH PROJECT SPECIFIC NOTES AND DETAILS

MP[ ] MD[ ] PP[ ] E[ ] OPTION 2: SHALL COMPLY WITH THE APPLICABLE OSHPD PRE-APPROVAL (OPM #) #_____.

PLUMBING DRAWING LIST

Sheet Number	Sheet Name
P-001	PLUMBING SCHEDULES & NOTES
P-101	PLUMBING SITE COORDINATION PLAN
P-121	PLUMBING PLAN - PHASE 1
P-122	PLUMBING PLAN - PHASE 2
P-301	PLUMBING SECTIONS
P-401	PLUMBING ENLARGED PLAN LOWER - PHASE 1
P-402	PLUMBING ENLARGED PLAN UPPER - PHASE 1
P-403	PLUMBING ENLARGED PLAN LOWER & UPPER - PHASE 2
P-501	PLUMBING DETAILS
P-502	PLUMBING DETAILS
P-503	PLUMBING DETAILS
P-601	PLUMBING DIAGRAMS AND CALCULATIONS

AGENCY APPROVAL STAMP

IDENTIFICATION STAMP
DIV. OF THE STATE ARCHITECT
APP: 01-120890 INC:
REVIEWED FOR
SS ☑ FLS ☑ ACS ☑
DATE: 10/25/2023

TLCDARCHITECTURE
520 Third St. #250
Santa Rosa, CA 95401
o: 707.525.5600
f: 707.525.5616
tlcd.com

CONSULTANT:
TEP ENGINEERING
880 Second Street
Santa Rosa, CA 95404-4610
707.538.0400 office
707.538.0406 fax

STAMP

REGISTERED PROFESSIONAL ENGINEER
M29511
Exp.Date 6-30-25
MECHANICAL
STATE OF CALIFORNIA

REVISIONS:

Number	Date	Description

NAPA VALLEY COLLEGE WINE EDUCATION CENTER

2277 NAPA VALLEJO HWY
NAPA, CA 94558

NAPA VALLEY COLLEGE

DSA APPLICATION NUMBER

TEP PROJECT NUMBER
TEP 89800

DATE
10/11/2023

PLUMBING SCHEDULES & NOTES

P-001

10/9/2023 9:52:07 PM

© THESE DRAWINGS ARE INSTRUMENTS OF SERVICE AND ARE THE SOLE PROPERTY OF TLCD ARCHITECTURE. ANY USE WITHOUT WRITTEN CONSENT IS PROHIBITED.

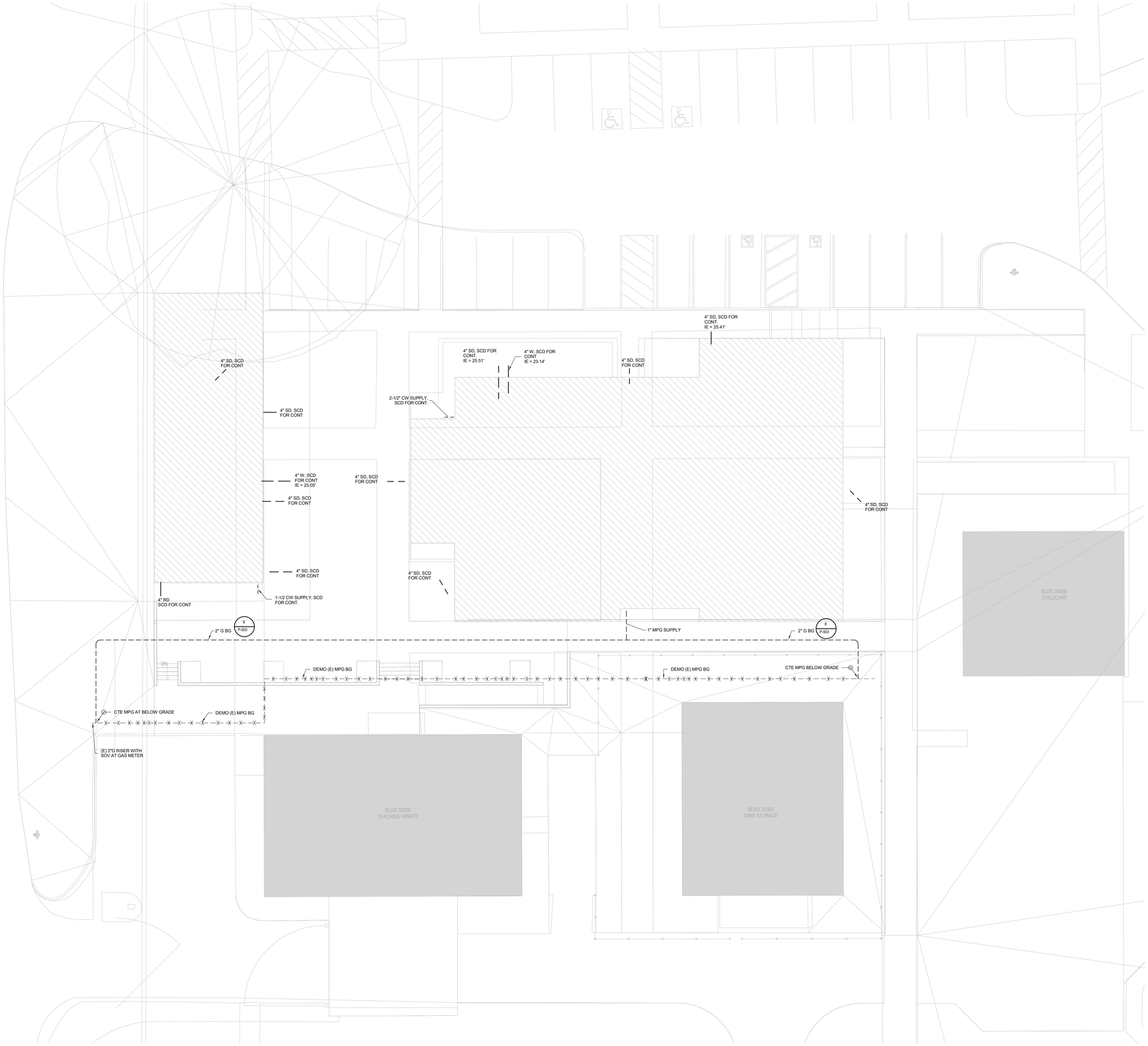

1 **PLUMBING SITE COORDINATION PLAN**

1" = 10'-0"

10/9/2023 9:52:07 PM

AGENCY APPROVAL STAMP:

IDENTIFICATION STAMP
DIV. OF THE STATE ARCHITECT
APP: 01-120890 INC:
REVIEWED FOR
SS ☑ FLS ☑ ACS ☑
DATE: 10/25/2023

TLCDARCHITECTURE

520 Third St. #250
Santa Rosa, CA 95401
o: 707.525.5600
f: 707.525.5616
tlcd.com

CONSULTANT:

TEP ENGINEERING
880 Second Street
Santa Rosa, CA 95404-4610
707.538.0400 office
707.538.0406 fax

STAMP

REGISTERED PROFESSIONAL ENGINEER
M29511
Exp.Date 6-30-25
MECHANICAL
STATE OF CALIFORNIA

REVISIONS:

Number	Date	Description

NAPA VALLEY COLLEGE WINE EDUCATION CENTER

2277 NAPA VALLEJO HWY
NAPA, CA 94558

NAPA VALLEY COLLEGE

DSA APPLICATION NUMBER:

TEP PROJECT NUMBER:
TEP 83650

DATE:
10/11/2023

PLUMBING SITE COORDINATION PLAN

P-101

© THESE DRAWINGS ARE INSTRUMENTS OF SERVICE AND ARE THE SOLE PROPERTY OF TLCD ARCHITECTURE. ANY USE WITHOUT WRITTEN CONSENT IS PROHIBITED.

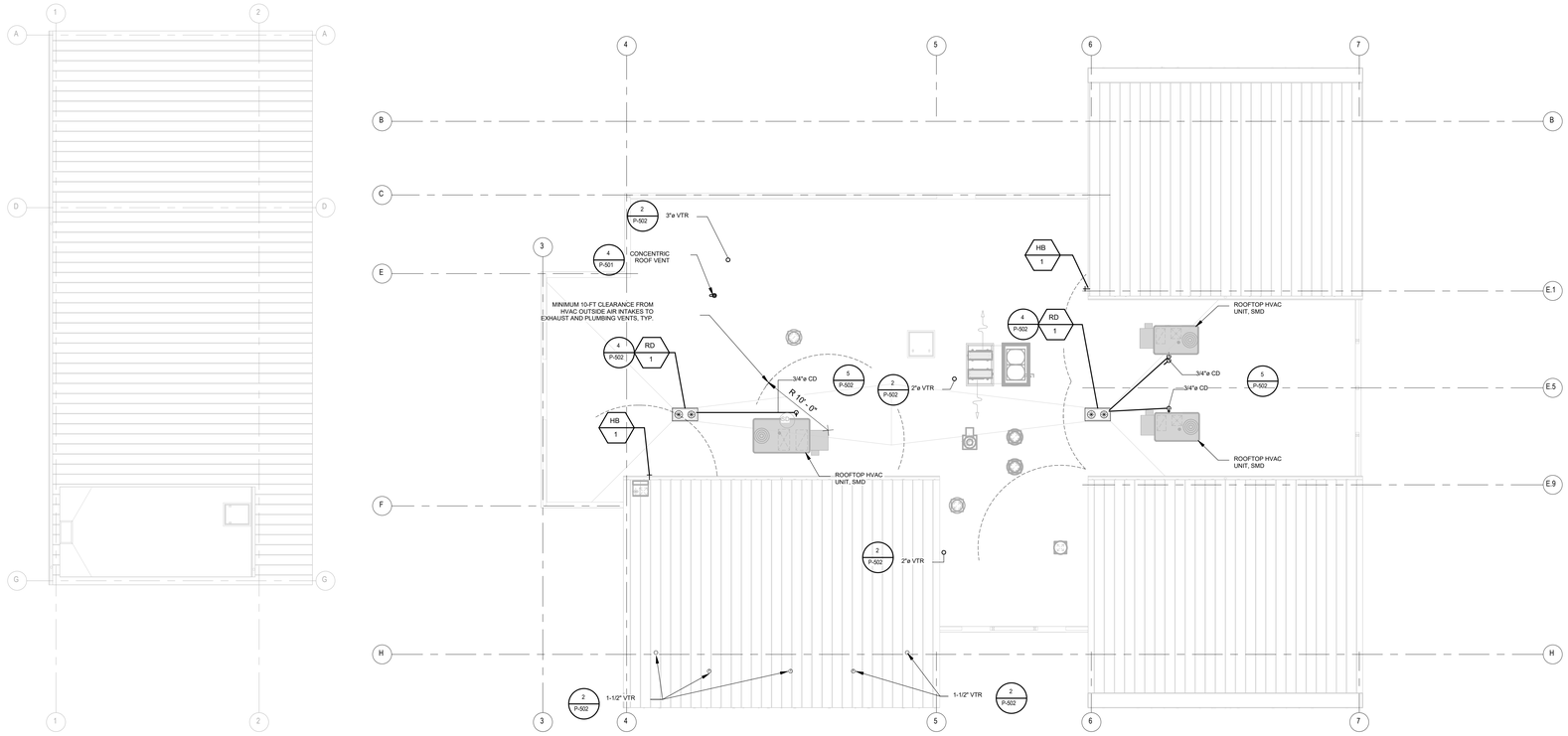

2 PLUMBING ROOF PLAN - PHASE 1

1/8" = 1'-0"

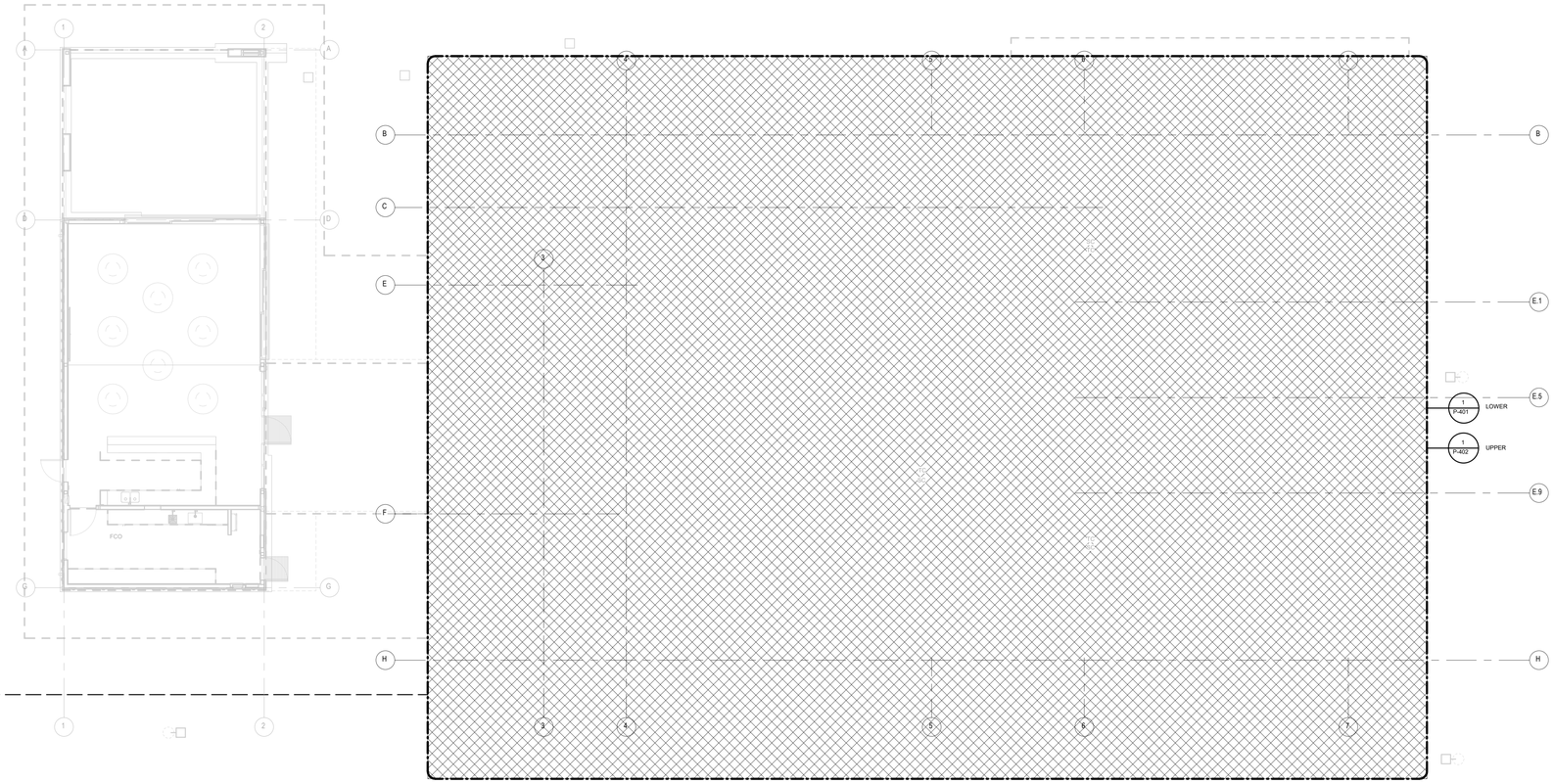

1 PLUMBING PLAN - PHASE 1

1/8" = 1'-0"

GENERAL NOTES FOR THIS SHEET

1. PROVIDE ACOUSTICAL PIPE TREATMENTS AND CLERANCE PER DETAIL;
2. PROVIDE PIPE INSULATION ON ALL HOT WATER AND HOT WATER RETURN PIPING PER DETAIL;
3. PROVIDE PIPE SUPPORTS PER DETAIL;
4. PROVIDE PVC TO CAST IRON TRANSITION AT SLAB PER DETAILS.

1 P-502
5 P-501
7 P-502
8 P-502
11 P-501

AGENCY APPROVAL STAMP:

IDENTIFICATION STAMP
DIV. OF THE STATE ARCHITECT
APP: 01-120890 INC:
REVIEWED FOR
SS ☑ FLS ☑ ACS ☑
DATE: 10/25/2023

TLCDARCHITECTURE
520 Third St. #250
Santa Rosa, CA 95401
o: 707.525.5600
f: 707.525.5616
tlcd.com

CONSULTANT:
TEP ENGINEERING
880 Second Street
Santa Rosa, CA 95404-4610
707.538.0400 office
707.538.0406 fax

STAMP:

REGISTERED PROFESSIONAL ENGINEER
M29511
Exp.Date 6-30-25
MECHANICAL
STATE OF CALIFORNIA

REVISIONS:

Number	Date	Description

NAPA VALLEY COLLEGE WINE EDUCATION CENTER

2277 NAPA VALLEJO HWY
NAPA, CA 94558

NAPA VALLEY COLLEGE
DSA APPLICATION NUMBER:

TEP PROJECT NUMBER:
TEP 83650

DATE:
10/11/2023

KEYPLAN

PLUMBING PLAN - PHASE 1

P-121

© THESE DRAWINGS ARE AN INSTRUMENT OF SERVICE AND ARE THE SOLE PROPERTY OF TLCD ARCHITECTURE. ANY USE OR PUBLICATION WITHOUT WRITTEN CONSENT IS PROHIBITED.

10/9/2023 9:52:09 PM

GENERAL NOTES FOR THIS SHEET

1. PROVIDE ACOUSTICAL PIPE TREATMENTS AND CLERANCE PER DETAIL.
2. PROVIDE PIPE INSULATION ON ALL HOT WATER AND HOT WATER RETURN PIPING PER DETAIL.
3. PROVIDE PIPE SUPPORTS PER DETAIL.
4. PROVIDE PVC TO CAST IRON TRANSITION AT SLAB PER DETAILS.

1 P-502 | 5 P-501 | 7 P-502 | 8 P-502 | 11 P-501

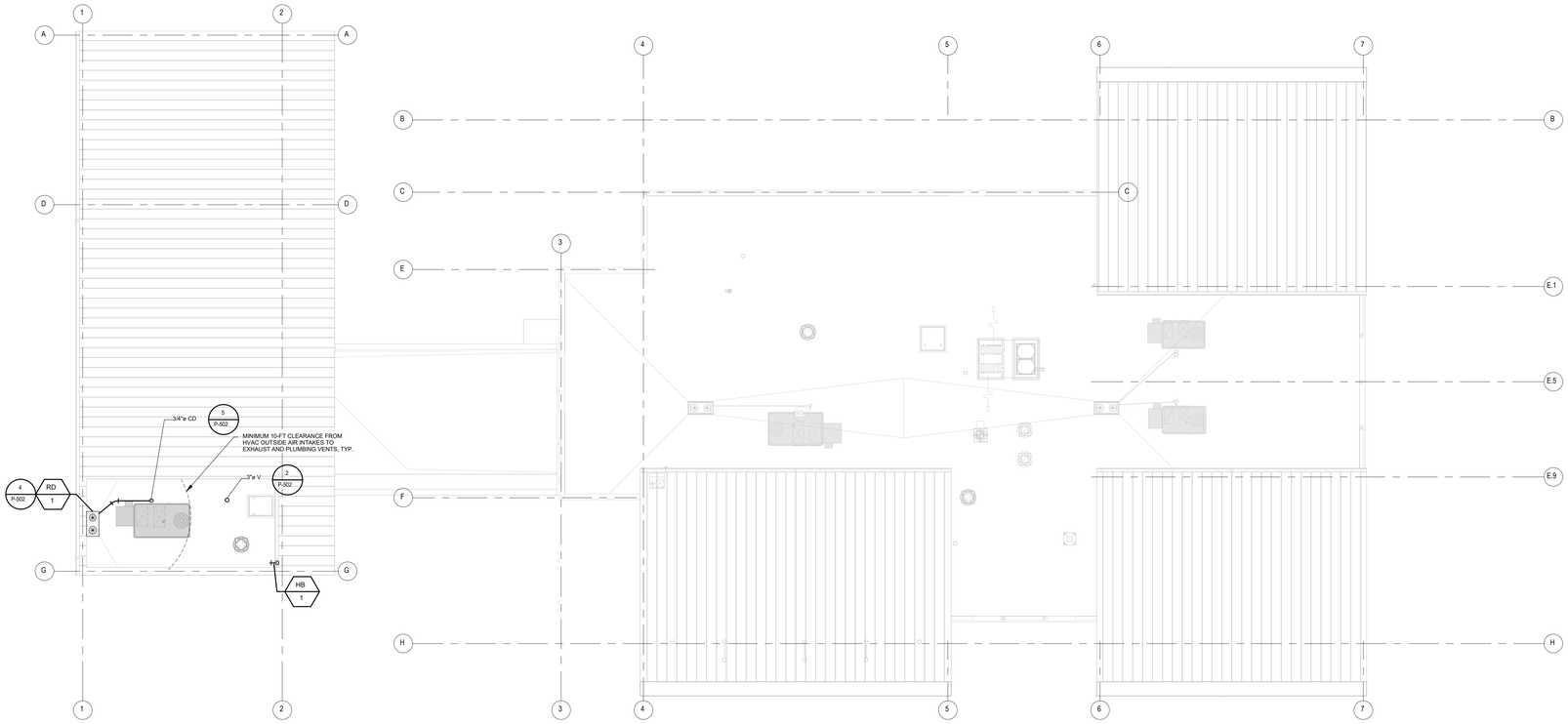

2 PLUMBING ROOF PLAN - PHASE 2

1/8" = 1'-0"

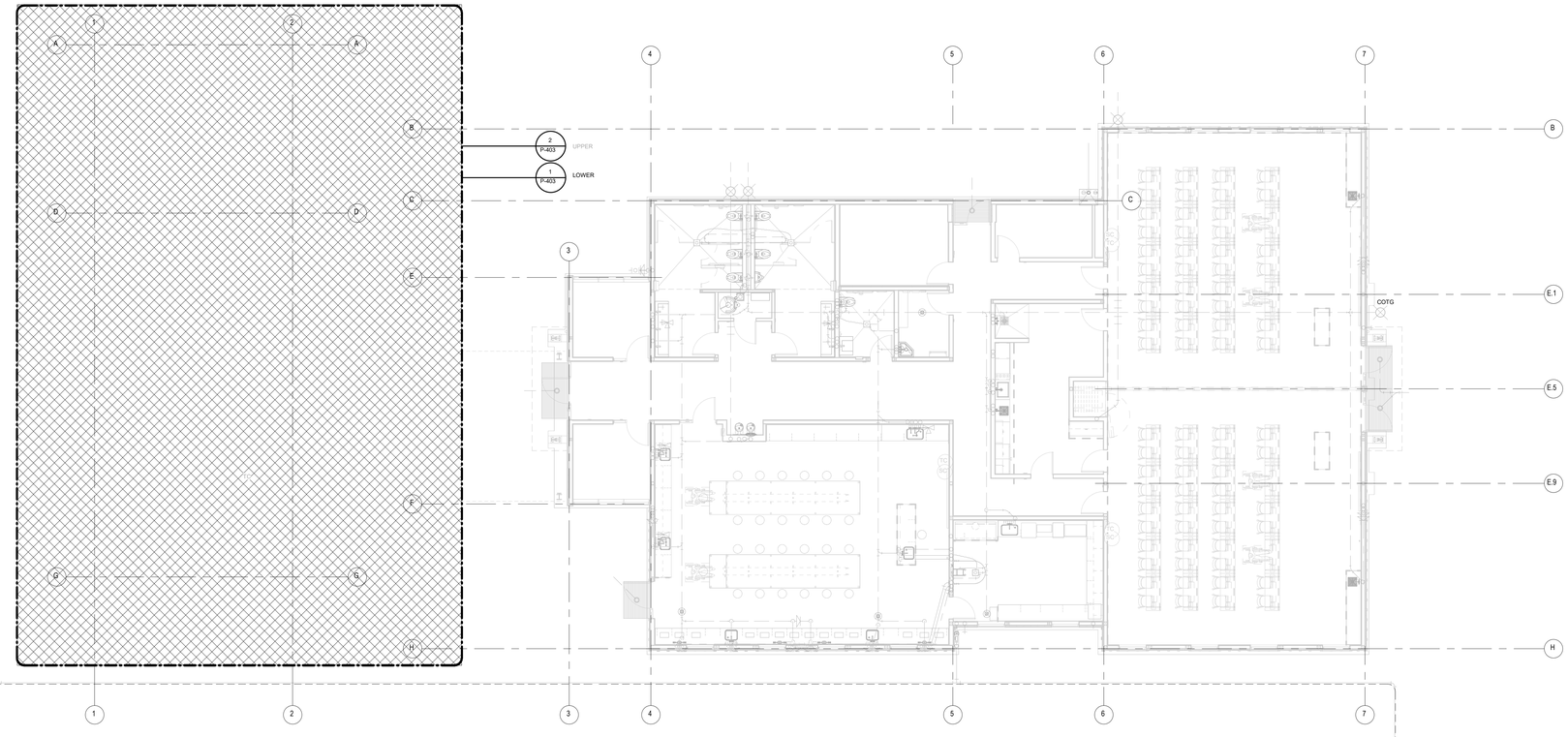

1 PLUMBING PLAN - PHASE 2

1/8" = 1'-0"

KEYPLAN

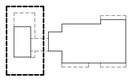

AGENCY APPROVAL STAMP:

IDENTIFICATION STAMP
DIV. OF THE STATE ARCHITECT
APP: 01-120890 INC:
REVIEWED FOR
SS ☑ FLS ☑ ACS ☑
DATE: 10/25/2023

TLCDARCHITECTURE
520 Third St. #250
Santa Rosa, CA 95401
o: 707.525.5600
f: 707.525.5616
tlcd.com

CONSULTANT:
TEP ENGINEERING
880 Second Street
Santa Rosa, CA 95404-4610
707.538.0400 office
707.538.0406 fax

STAMP:

REGISTERED PROFESSIONAL ENGINEER
M29511
Exp.Date 6-30-25
MECHANICAL
STATE OF CALIFORNIA

REVISIONS:

Number	Date	Description

NAPA VALLEY COLLEGE WINE EDUCATION CENTER

2277 NAPA VALLEJO HWY
NAPA, CA 94558

NAPA VALLEY COLLEGE
DSA APPLICATION NUMBER:

TEP PROJECT NUMBER:
TEP 83650

DATE:
10/11/2023

PLUMBING PLAN - PHASE 2

P-122

© THESE DRAWINGS ARE INSTRUMENTS OF SERVICE AND ARE THE SOLE PROPERTY OF TLCD ARCHITECTURE. ANY USE WITHOUT WRITTEN CONSENT IS PROHIBITED.

10/9/2023 9:52:11 PM

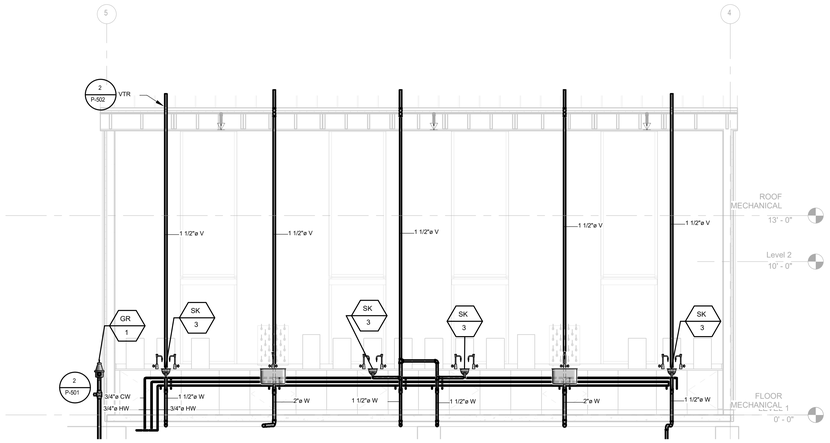

1 **PLUMBING AT WINE LAB NORTH WALL**

1/4" = 1'-0"

AGENCY APPROVAL STAMP:

IDENTIFICATION STAMP
DIV. OF THE STATE ARCHITECT
APP: 01-120890 INC:
REVIEWED FOR
SS ☑ FLS ☑ ACS ☑
DATE: 10/25/2023

TLCDARCHITECTURE
520 Third St. #250
Santa Rosa, CA 95401
o: 707.525.5600
f: 707.525.5616
tlcd.com

CONSULTANT:
TEP ENGINEERING
880 Second Street
Santa Rosa, CA 95404-4610
707.538.0400 office
707.538.0406 fax

STAMP:

REGISTERED PROFESSIONAL ENGINEER
TIM D. SOUZA
M29511
Exp.Date 6-30-25
MECHANICAL
STATE OF CALIFORNIA

REVISIONS:

Number	Date	Description

NAPA VALLEY COLLEGE WINE EDUCATION CENTER

2277 NAPA VALLEJO HWY
NAPA, CA 94558

NAPA VALLEY COLLEGE
DSA APPLICATION NUMBER

TEP PROJECT NUMBER:
TEP #3650

DATE:
10/11/2023

PLUMBING SECTIONS

P-301

© THESE DRAWINGS ARE INSTRUMENTS OF SERVICE AND ARE THE SOLE PROPERTY OF TLCD ARCHITECTURE. ANY USE WITHOUT WRITTEN CONSENT IS PROHIBITED.

10/9/2023 9:52:13 PM

GENERAL NOTES FOR THIS SHEET

1. PROVIDE ACOUSTICAL PIPE TREATMENTS AND CLERANCE PER DETAIL:
2. PROVIDE PIPE INSULATION ON ALL HOT WATER AND HOT WATER RETURN PIPING PER DETAIL:
3. PROVIDE PIPE SUPPORTS PER DETAIL:
4. PROVIDE PVC TO CAST IRON TRANSITION AT SLAB PER DETAILS.

WALL TYPE LEGEND

1 HR RATED WALL

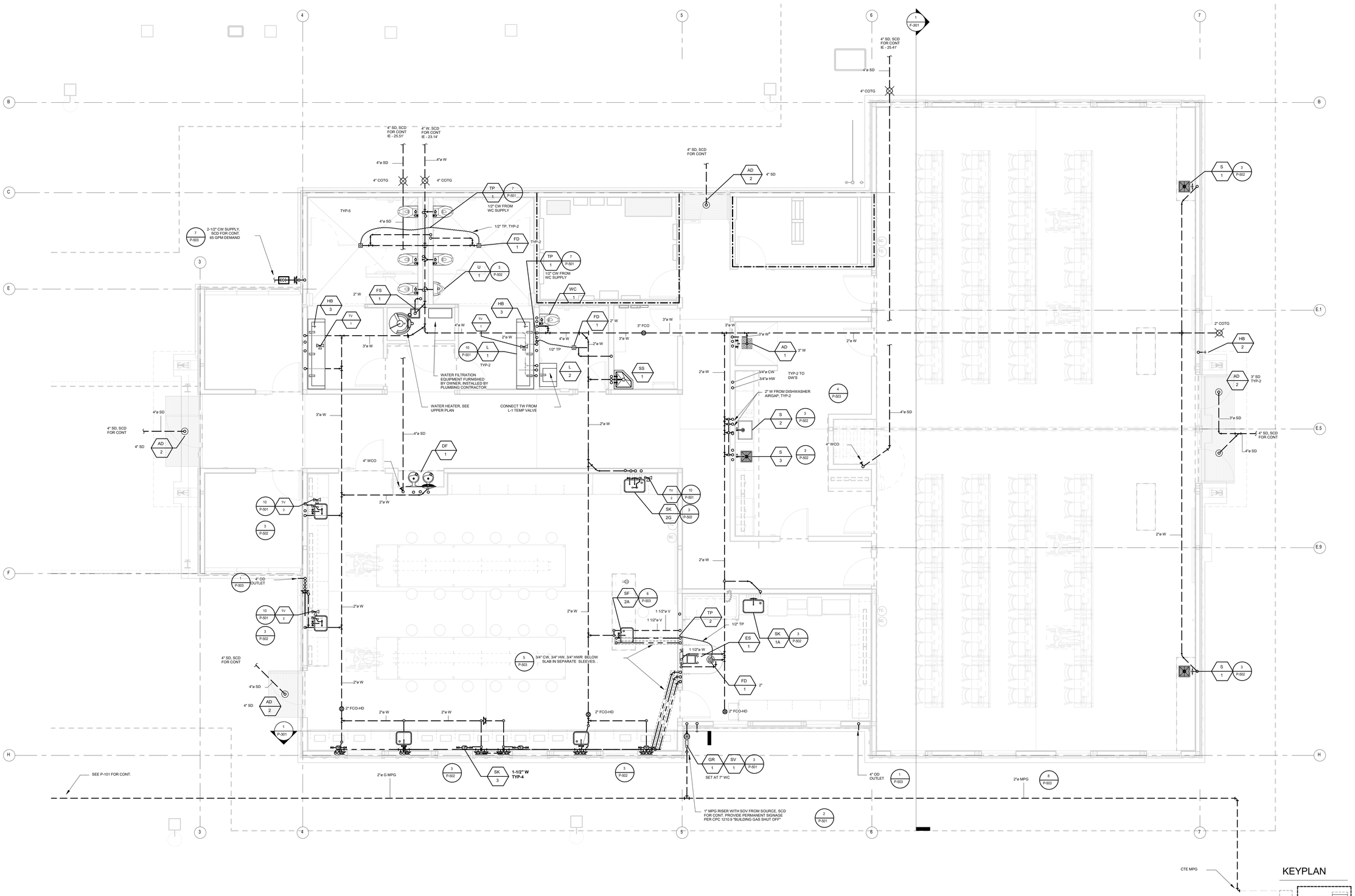

KEYPLAN

1 PLUMBING PLAN ENLARGED LOWER - PHASE 1

1/4" = 1'-0"

10/9/2023 9:52:16 PM

AGENCY APPROVAL STAMP:

IDENTIFICATION STAMP
DIV. OF THE STATE ARCHITECT
APP: 01-120890 INC:
REVIEWED FOR
SS ☑ FLS ☑ ACS ☑
DATE: 10/25/2023

TLCDARCHITECTURE
520 Third St. #250
Santa Rosa, CA 95401
o: 707.525.5600
f: 707.525.5616
tlcd.com

CONSULTANT:
TEP ENGINEERING
880 Second Street
Santa Rosa, CA 95404-4610
707.538.0400 office
707.538.0406 fax

STAMP:

REGISTERED PROFESSIONAL ENGINEER
TIM D. SOUZA
M29511
Exp.Date 6-30-25
MECHANICAL
STATE OF CALIFORNIA

REVISIONS:

Number	Date	Description

NAPA VALLEY COLLEGE WINE EDUCATION CENTER

2277 NAPA VALLEJO HWY
NAPA, CA 94558

NAPA VALLEY COLLEGE
DSA APPLICATION NUMBER

TEP PROJECT NUMBER
TEP #3650

DATE
10/11/2023

PLUMBING ENLARGED PLAN LOWER - PHASE 1

P-401

© THESE DRAWINGS ARE INSTRUMENTS OF SERVICE AND ARE THE SOLE PROPERTY OF TLCD ARCHITECTURE. MAY USE WITHOUT WRITTEN CONSENT IS PROHIBITED.

GENERAL NOTES FOR THIS SHEET

1. PROVIDE ACOUSTICAL PIPE TREATMENTS AND CLERANCE PER DETAIL.
2. PROVIDE PIPE INSULATION ON ALL HOT WATER AND HOT WATER RETURN PIPING PER DETAIL.
3. PROVIDE PIPE SUPPORTS PER DETAIL.
4. PROVIDE PVC TO CAST IRON TRANSITION AT SLAB PER DETAILS.

WALL TYPE LEGEND

1 HR RATED WALL

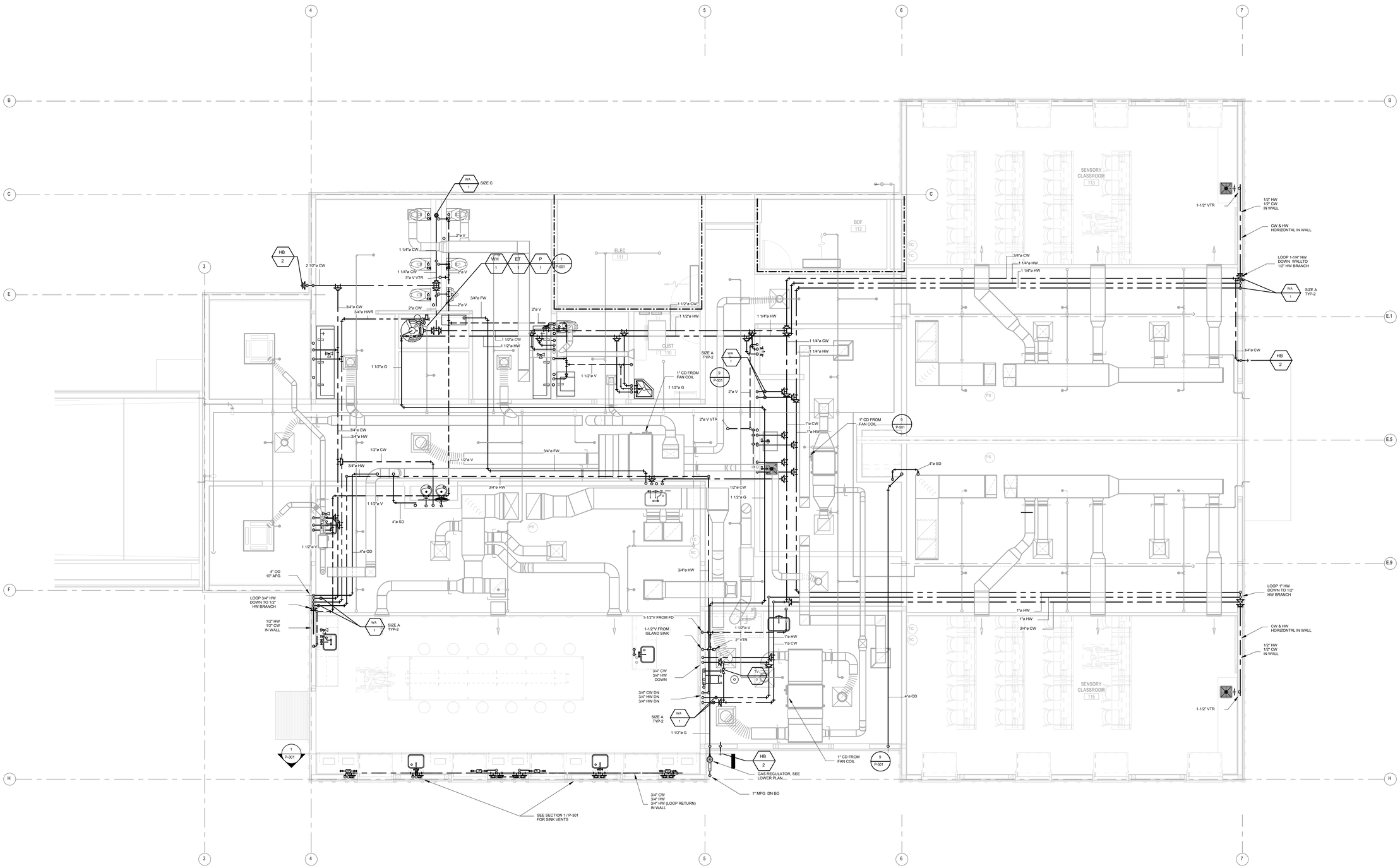

1 PLUMBING PLAN ENLARGED UPPER - PHASE 1

1/4" = 1'-0"

KEYPLAN

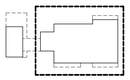

AGENCY APPROVAL STAMP:

IDENTIFICATION STAMP
DIV. OF THE STATE ARCHITECT
APP: 01-120890 INC:
REVIEWED FOR
SS ☑ FLS ☑ ACS ☑
DATE: 10/25/2023

TLCDARCHITECTURE
520 Third St. #250
Santa Rosa, CA 95401
o: 707.525.5600
f: 707.525.5616
tlcd.com

CONSULTANT:
TEP ENGINEERING
880 Second Street
Santa Rosa, CA 95404-4610
707.538.0400 office
707.538.0406 fax

STAMP

REGISTERED PROFESSIONAL ENGINEER
M29511
Exp.Date 6-30-25
MECHANICAL
STATE OF CALIFORNIA

REVISIONS:

Number	Date	Description

NAPA VALLEY COLLEGE WINE EDUCATION CENTER

2277 NAPA VALLEJO HWY
NAPA, CA 94558

NAPA VALLEY COLLEGE
DSA APPLICATION NUMBER

TEP PROJECT NUMBER:
TEP 23050

DATE:
10/11/2023

PLUMBING ENLARGED PLAN UPPER - PHASE 1

P-402

© THESE DRAWINGS ARE AUTHORED BY DEPUTY AND ARE THE SOLE PROPERTY OF TLCD ARCHITECTURE. MAY NOT BE REPRODUCED WITHOUT WRITTEN CONSENT IS STRICTLY PROHIBITED.

10/5/2023 9:52:19 PM

GENERAL NOTES FOR THIS SHEET

1. PROVIDE ACOUSTICAL PIPE TREATMENTS AND CLERANCE PER DETAIL.
2. PROVIDE PIPE INSULATION ON ALL HOT WATER AND HOT WATER RETURN PIPING PER DETAIL.
3. PROVIDE PIPE SUPPORTS PER DETAIL.
4. PROVIDE PVC TO CAST IRON TRANSITION AT SLAB PER DETAILS.

1 P-502 | 5 P-501 | 7 P-502 | 8 P-502 | 11 P-501

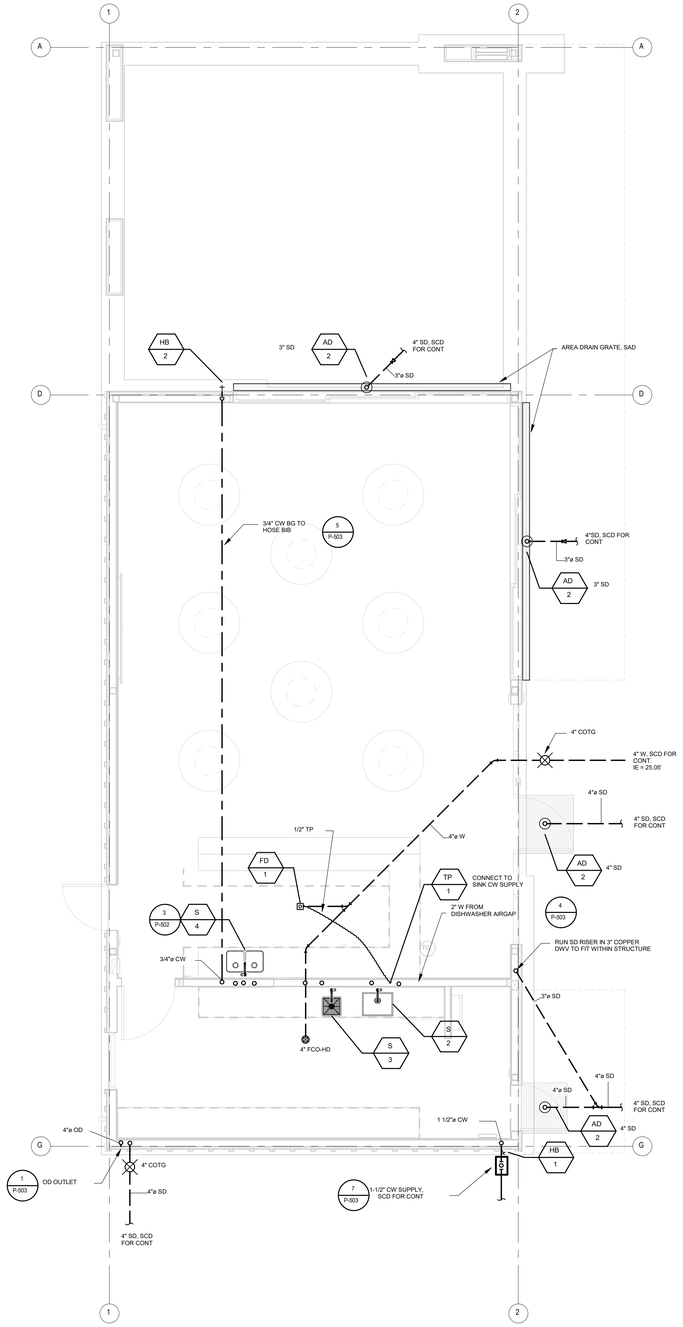

1 PLUMBING PLAN ENLARGED LOWER - PHASE 2

1/4" = 1'-0"

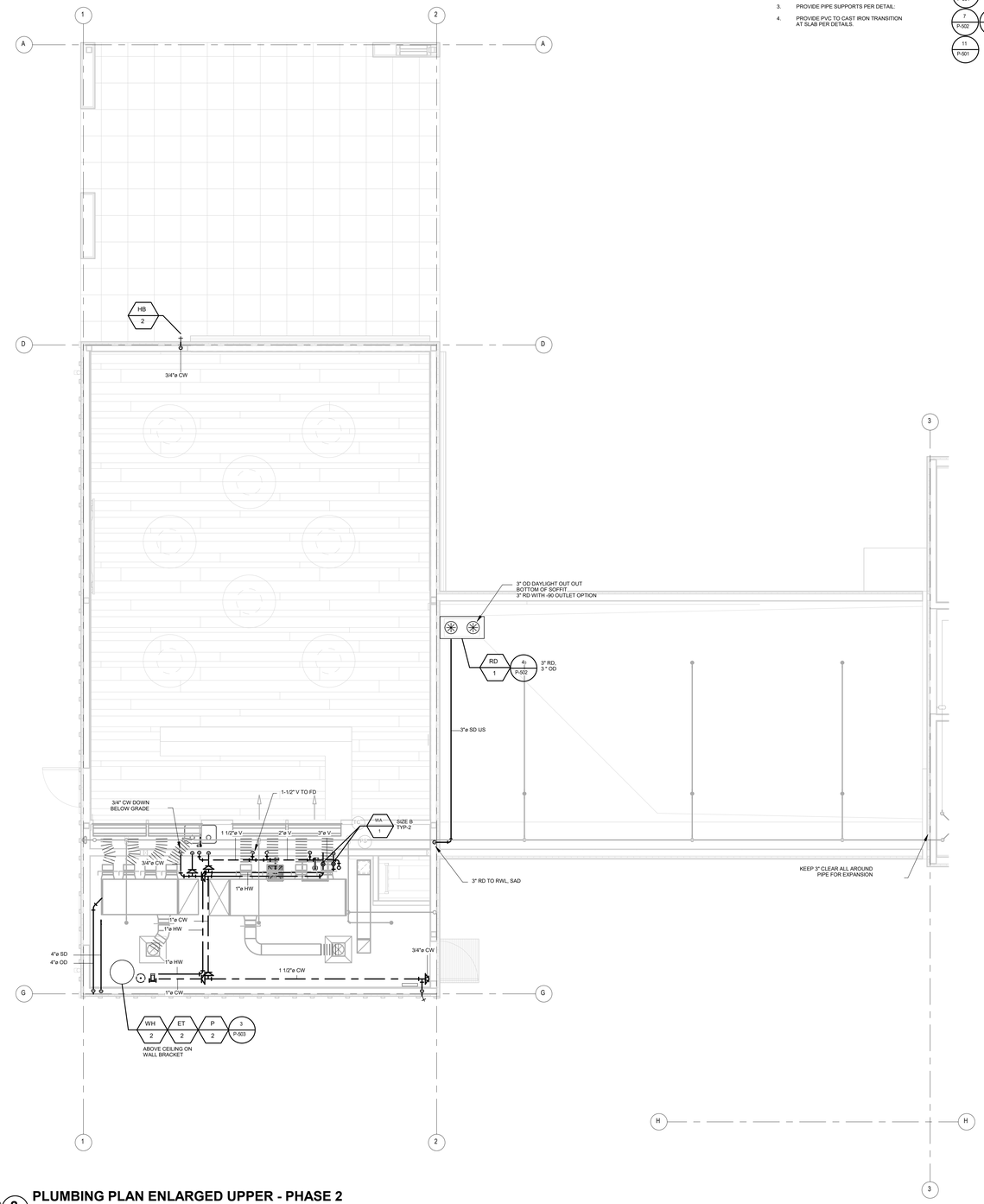

2 PLUMBING PLAN ENLARGED UPPER - PHASE 2

1/4" = 1'-0"

AGENCY APPROVAL STAMP:

IDENTIFICATION STAMP
DIV. OF THE STATE ARCHITECT
APP: 01-120890 INC:
REVIEWED FOR
SS ☑ FLS ☑ ACS ☑
DATE: 10/25/2023

TLCDARCHITECTURE
520 Third St. #250
Santa Rosa, CA 95401
o: 707.525.5600
f: 707.525.5616
tlcd.com

CONSULTANT:
TEP ENGINEERING
880 Second Street
Santa Rosa, CA 95404-4610
707.538.0400 office
707.538.0406 fax

STAMP:

REGISTERED PROFESSIONAL ENGINEER
M29511
Exp.Date 6-30-25
MECHANICAL
STATE OF CALIFORNIA

REVISIONS:

Number	Date	Description

NAPA VALLEY COLLEGE WINE EDUCATION CENTER

2277 NAPA VALLEJO HWY NAPA, CA 94558

NAPA VALLEY COLLEGE

DSA APPLICATION NUMBER

TEP PROJECT NUMBER
TEP #3650

DATE
10/11/2023

PLUMBING ENLARGED PLAN LOWER & UPPER - PHASE 2

P-403

KEYPLAN

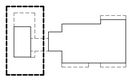

© THESE DRAWINGS ARE INSTRUMENTS OF SERVICE AND ARE THE SOLE PROPERTY OF TLCD ARCHITECTURE. USE OR REPRODUCTION WITHOUT WRITTEN CONSENT IS PROHIBITED.

10/30/2023 9:52:20 PM

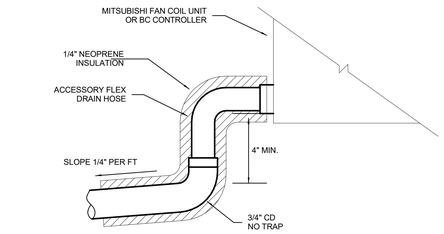

AT VRF FAN COILS

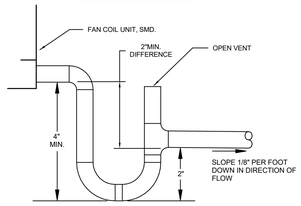

AT NON-VRF FAN COILS

9 CONDENSATE DRAIN AT FAN COILS

NOT TO SCALE

FULL LINE SIZE, FULL PORT AGA LISTED BALL VALVE PER SPECIFICATIONS

GAS METALLIC FLEX			
LOCATION	SIZE	LENGTH	PRODUCT
INDOORS	1/4" to 3/4"	12" MIN, 24" MAX	BRASSCRAFT SERIES CC0
	1" to 4"	12" MIN, 18" MAX	UNISOURCE SERIES 407 or METRAFLEX
OUTDOORS	1/2" to 4"	12" MIN, 18" MAX	UNISOURCE SERIES 407 or METRAFLEX

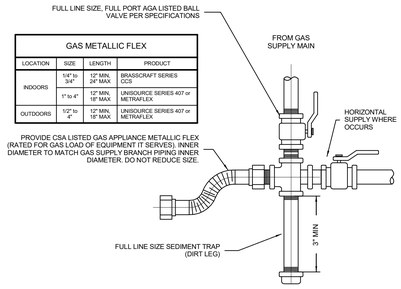

6 GAS CONNECTION TO EQUIPMENT

NOT TO SCALE

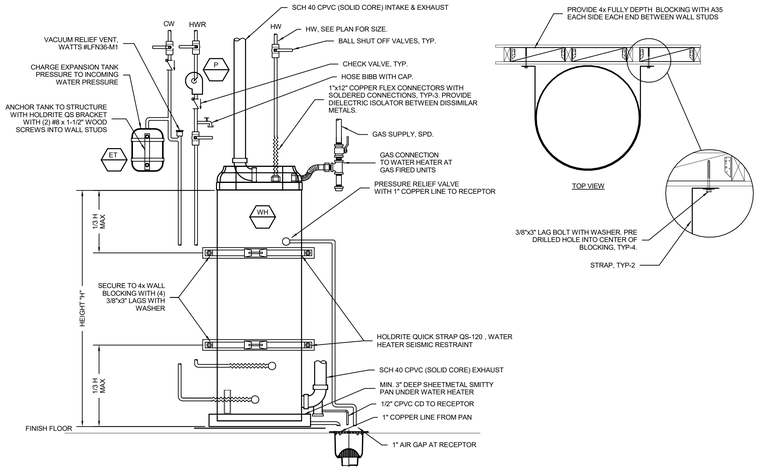

1 1 - GAS WATER HEATER DETAIL

NOT TO SCALE

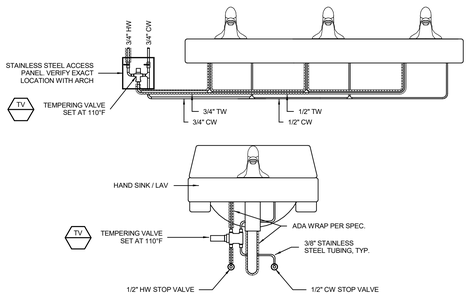

10 TEMPERING VALVE AT SINK OR LAV

NOT TO SCALE

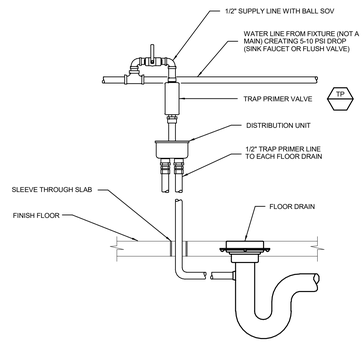

7 TRAP PRIMER

NOT TO SCALE

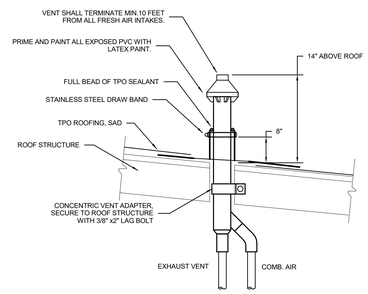

4 CONCENTRIC VENT AT ROOF

NOT TO SCALE

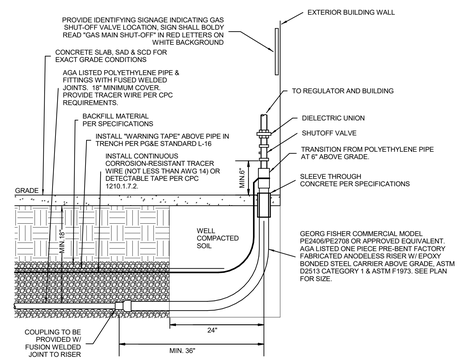

ALL GAS PIPING SHALL CONFORM TO THE REQUIREMENTS OF THE LATEST ADOPTED EDITION OF THE: CPC, NFPA 54 NATIONAL FUEL GAS CODE & PG&E GREENBOOK.

2 GAS RISER TO BUILDING

NOT TO SCALE

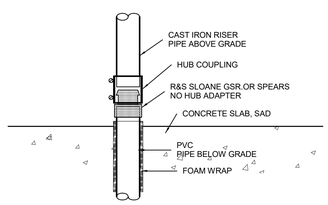

11 TRANSITION PVC TO CAST IRON AT RISERS

NOT TO SCALE

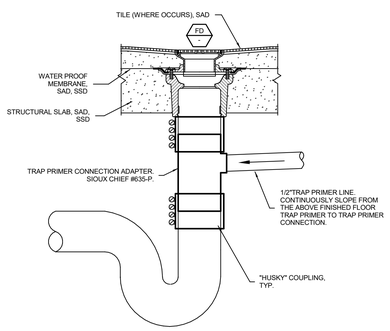

8 FLOOR DRAIN

NOT TO SCALE

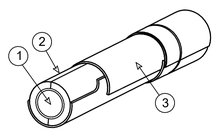

1. PIPE
2. FIBERGLASS INSULATION WITH ALL SERVICE JACKET.
3. PVC JACKETING. SILICONE CAULK PVC JACKETING SEAMS, JOINTS & ENDS WATERTIGHT WITH APPROVED ADHESIVE. INSIDE BUILDINGS LOCATE JACKET SEAMS IN LEAST VISIBLE LOCATION. OUTSIDE, WHERE EXPOSED TO WEATHER, LOCATE JACKET SEAMS ON BOTTOM OF PIPING.

INSULATION THICKNESS (1)					
SERVICE	TEMPERATURE RANGE	NOMINAL PIPE DIAMETER (in inches)			
		< 1	1 to < 1.5	1.5 to < 4	4 to < 8
HOT WATER (2)	105 F - 140 F	1.0	1.5	1.5	1.5
COLD WATER (4) AND OUTDOOR FIRE SPRINKLER	FREEZE PROTECTION	3/4	3/4	3/4	3/4

NOTES:
1. REFERENCE CALIFORNIA ENERGY CODE, TABLE 120.3-A.
2. INSULATE ALL HOT WATER SYSTEMS AS INDICATED.
3. STEAM IS INSULATED FOR PERSONNEL PROTECTION.
4. COLD WATER IS ONLY INSULATED OUTSIDE THE BUILDING, WHERE EXPOSED TO EXTERIOR AMBIENT CONDITIONS, FOR FREEZE PROTECTION.

5 WATER PIPE INSULATION

NOT TO SCALE

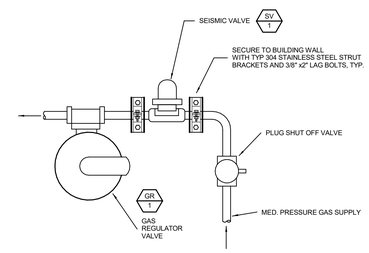

3 GAS SEISMIC AND REGULATOR VALVE

NOT TO SCALE

AGENCY APPROVAL STAMP:

IDENTIFICATION STAMP
DIV. OF THE STATE ARCHITECT
APP: 01-120890 INC:
REVIEWED FOR
SS ☑ FLS ☑ ACS ☑
DATE: 10/25/2023

TLCDARCHITECTURE
520 Third St. #250
Santa Rosa, CA 95401
o: 707.525.5600
f: 707.525.5616
tlcd.com

CONSULTANT:
TEP ENGINEERING
880 Second Street
Santa Rosa, CA 95404-4610
707.538.0400 office
707.538.0406 fax

STAMP:

REGISTERED PROFESSIONAL ENGINEER
M29511
Exp.Date 6-30-25
MECHANICAL
STATE OF CALIFORNIA

REVISIONS:

Number	Date	Description

NAPA VALLEY COLLEGE WINE EDUCATION CENTER

2277 NAPA VALLEJO HWY
NAPA, CA 94558

NAPA VALLEY COLLEGE
DSA-APPLICATION NUMBER

TEP PROJECT NUMBER:
TEP #3650

DATE:
10/11/2023

PLUMBING DETAILS

P-501

10/9/2023 9:52:20 PM

© THESE DRAWINGS AND SUPPLEMENTS OF SERVICE AND ARE THE SOLE PROPERTY OF TLCD ARCHITECTURE. ANY USE WITHOUT WRITTEN CONSENT IS PROHIBITED.

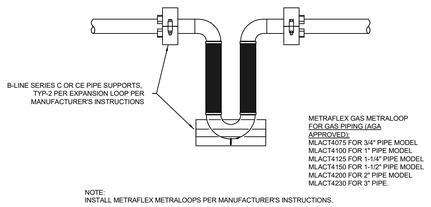

NOTE:
INSTALL METRAFLEX METRALOOPS PER MANUFACTURER'S INSTRUCTIONS.

6 SIESMIC PIPING EXPANSION LOOP

NOT TO SCALE

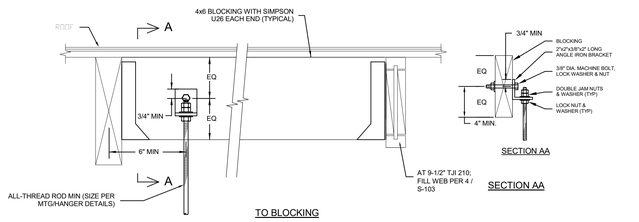

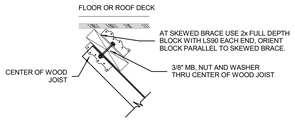

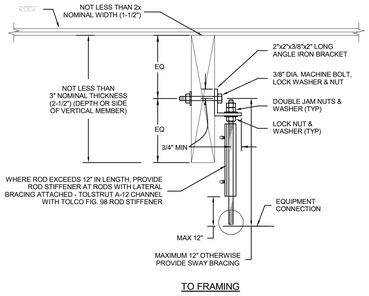

7 UPPER ATTACHMENT AT WOOD FRAMING

NOT TO SCALE

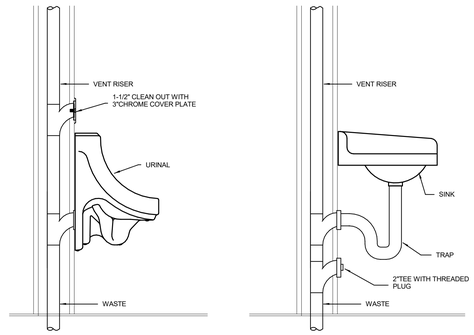

3 CLEAN OUT AT URINAL OR SINK

NOT TO SCALE

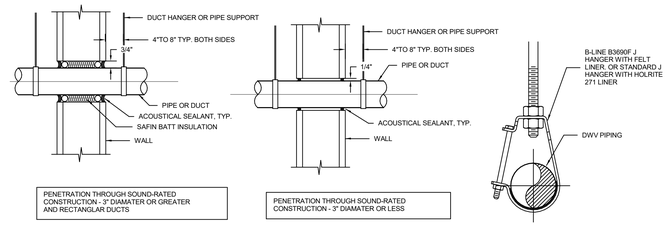

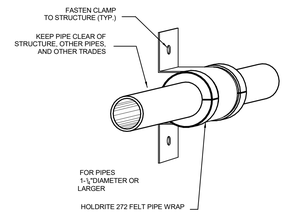

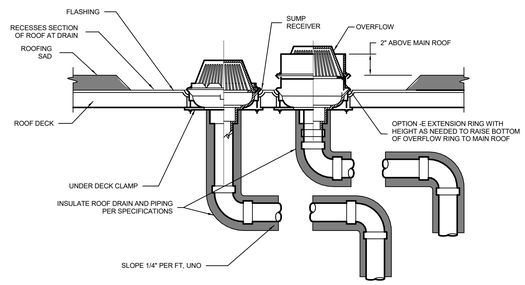

4 ROOF AND OVERFLOW DRAINS

NOT TO SCALE

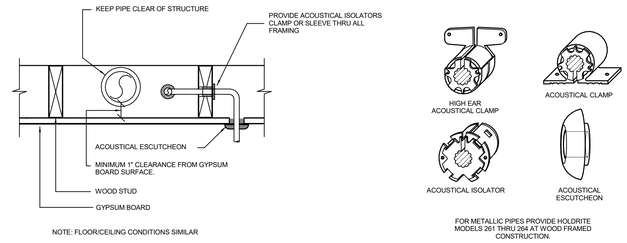

1 ACOUSTICAL PIPE TREATMENTS

NOT TO SCALE

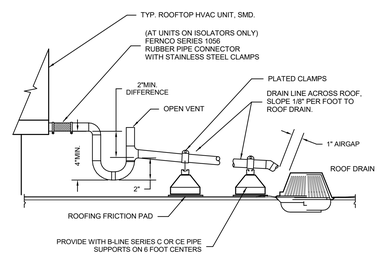

5 CONDENSATE DRAINS AT RTU'S

NOT TO SCALE

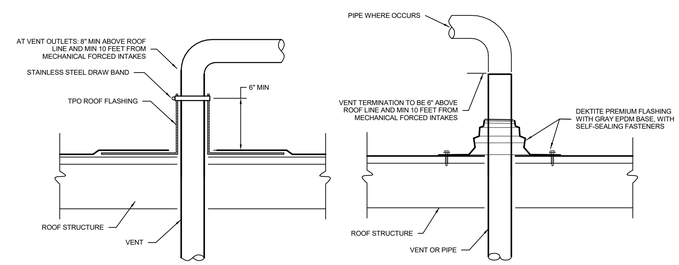

2 VENT OR PIPE THROUGH ROOF

NOT TO SCALE

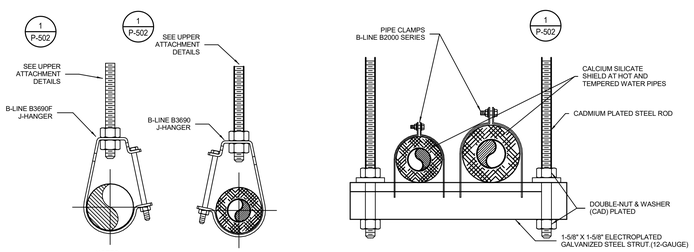

NOTES:
1. SIZE HANGER AND CLAMP TO ADEQUATELY SUPPORT LOAD (REFER TO B-LINE HANGER CATALOG).
2. SIZE CALCIUM SILICATE SHIELD TO FIT PIPE AND INSULATION THICKNESS.
3. SIZE HANGER TO FIT CALCIUM SILICATE SHIELDS.
4. SUPPORT INTERVALS PER CPC TABLE 313.1.
5. BRACE ALL PIPING AT INTERVALS TO PREVENT SWAYING.
6. ALL PIPING LARGER THAN 2" AND NOT SUPPORTED WITHIN 12" OF STRUCTURE TO HAVE TRANSVERSE BRACING EVERY 40-FT AND LONGITUDINAL BRACING EVERY 80-FT.
7. THREADED ROD TO BE SIZED PER CPC TABLE 313.6 (MIN.)

PIPE SIZE	ROD SIZE
1/2" to 4"	3/8"
5" to 8"	1/2"

3/8" HANGER RODS AT 6 FOOT SPACING MAXIMUM LOAD 100 LBS PER FOOT.

1/2" HANGER RODS AT 6 FOOT SPACING MAXIMUM LOAD 180 LBS PER FOOT

STEEL SCH 40 PIPE WEIGHT

SIZE	PIPE WEIGHT (LBS/LF) WITHOUT FLUID (GAS)	MAXIMUM SINGLE PIPE HANGER SPAN
1/2"	0.85	6'
3/4"	1.13	8'
1"	1.68	8'
1-1/4"	2.27	10'
1-1/2"	2.72	10'
2	3.65	10'
2-1/2"	5.79	10'
3"	7.57	10'

TYPE L COPPER PIPE WEIGHT

SIZE	PIPE WEIGHT (LBS/LF) WITHOUT FLUID	PIPE WEIGHT (LBS/LF) WITH FLUID	PIPE WEIGHT (LBS/LF) WITH FLUID & INSULATION	MAXIMUM SINGLE PIPE HANGER SPAN
1/2"	0.28	0.39	0.51	6'
3/4"	0.45	0.66	0.80	6'
1"	0.63	1.01	1.17	6'
1-1/4"	0.88	1.44	1.62	6'
1-1/2"	1.14	1.91	2.11	6'
2"	1.75	3.09	3.32	10'
2-1/2"	2.48	4.55	4.80	10'

8 PIPING SUPPORTS

NOT TO SCALE

10/9/2023 9:52:21 PM

AGENCY APPROVAL STAMP:

IDENTIFICATION STAMP
DIV. OF THE STATE ARCHITECT
APP: 01-120890 INC:
REVIEWED FOR
SS ☑ FLS ☑ ACS ☑
DATE: 10/25/2023

TLCDARCHITECTURE
520 Third St. #250
Santa Rosa, CA 95401
o: 707.525.5600
f: 707.525.5616
tlcd.com

CONSULTANT:
TEP ENGINEERING
880 Second Street
Santa Rosa, CA 95404-4610
707.538.0400 office
707.538.0406 fax

STAMP

REGISTERED PROFESSIONAL ENGINEER
Timothy P. Boyle
M29511
Exp.Date 6-30-25
MECHANICAL
STATE OF CALIFORNIA

REVISIONS:

Number	Date	Description

NAPA VALLEY COLLEGE WINE EDUCATION CENTER

2277 NAPA VALLEJO HWY
NAPA, CA 94558

NAPA VALLEY COLLEGE
DSA APPLICATION NUMBER

TEP PROJECT NUMBER:
TEP #3650

DATE:
10/11/2023

PLUMBING DETAILS

P-502

© THESE DRAWINGS ARE WITHIN THE OF SERVICE AND ARE THE SOLE PROPERTY OF TLCD ARCHITECTURE. ANY USE WITHOUT WRITTEN CONSENT IS PROHIBITED.

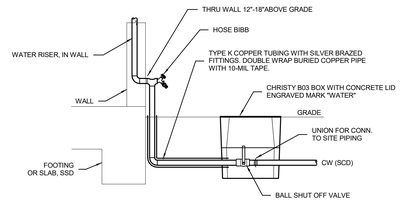

7 WATER SUPPLY RISER

NOT TO SCALE

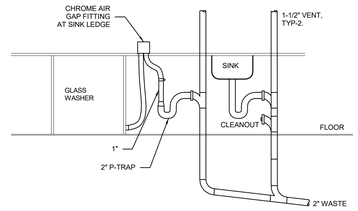

4 DISHWASHER DRAIN CONNECTION

NOT TO SCALE

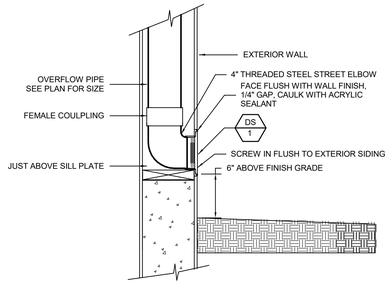

1 OVERFLOW OUTLET AT WALL

NOT TO SCALE

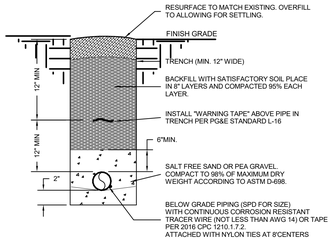

NOTES:

1. WARNING TAPE IS TO BE INSTALLED IN OPEN TRENCH INSTALLATION OVER GAS PIPELINES IN BOTH TRANSMISSION AND DISTRIBUTION FACILITIES. THIS INCLUDES TRENCHES, BELL HOLES, EXCAVATIONS FOR REPAIR PURPOSES AND RISER REPLACEMENTS. THE WARNING TAPE IS INTENDED FOR EXCAVATOR DIGGING IN THE "TOLERANCE ZONE" TO STRIKE THE WARNING TAPE PRIOR THAN THE PIPELINE. WHEN THE WARNING TAPE IS EXPOSED AND GRABBED WITH EXCAVATING EQUIPMENT, IT STRETCHES WITHOUT BREAKING, THUS ALERTING THE EXCAVATOR OF THE GAS FACILITY BELOW.
2. INSTALL 6" WIDE WARNING TAPE ABOVE THE GAS PIPELINE AT LEAST 12" BELOW GRADE, AND NO CLOSER THAN 12" FROM THE PIPE. INSTALLATION SHOULD PROVIDE THE GREATEST DISTANCE BETWEEN THE PIPELINE AND THE TAPE AS POSSIBLE. INSTALL THE TAPE ALONG THE LENGTH OF THE EXCAVATION. ENSURE THAT THE TAPE OVERLAPS WHEN TWO OR MORE PIECES OF TAPE ARE USED.
   EXCEPTION: WHEN A JOINT TRENCH DESIGN DOES NOT ALLOW FOR INSTALLMENT OF WARNING TAPE WITHIN THE "WARNING TAPE INSTALLATION ZONE", INSTALL THE WARNING TAPE A MINIMUM OF 6" ABOVE THE GAS PIPELINE, AND BELOW THE FACILITY ABOVE THE PIPE.
3. WARNING TAPE SHALL BE BRIGHTLY COLORED YELLOW AND MARKED "CAUTION: GAS LINE BURIED BELOW" OR MARKED WITH A SIMILAR NOTIFICATION.
4. WARNING TAPE SHALL BE STORED IN SUCH A MANNER THAT LIMITS ULTRAVIOLET (UV) EXPOSURE.

8 GAS PIPING TRENCH

NOT TO SCALE

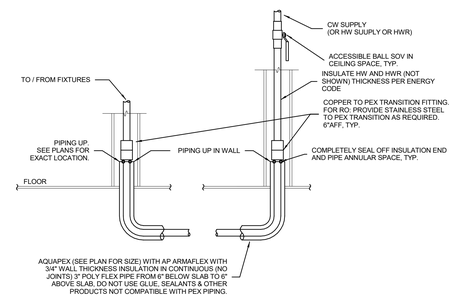

5 WATER PIPING BELOW SLAB

NOT TO SCALE

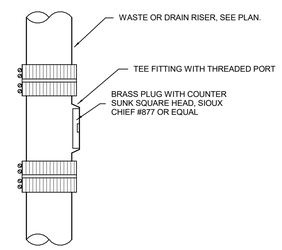

2 WALL CLEANOUT AT RISER

NOT TO SCALE

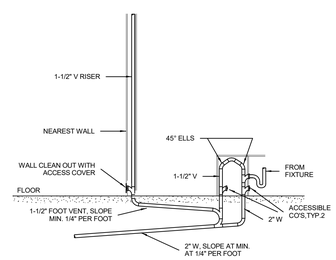

6 ISLAND VENT

NOT TO SCALE

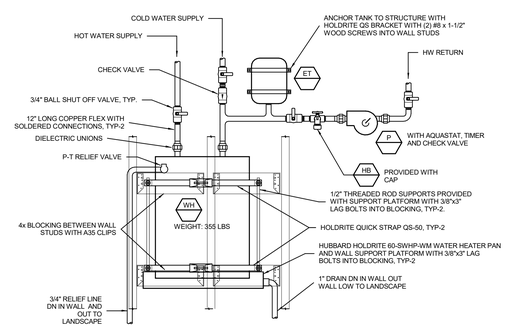

3 WATER HEATER AT WALL

NOT TO SCALE

AGENCY APPROVAL STAMP:

IDENTIFICATION STAMP
DIV. OF THE STATE ARCHITECT
APP: 01-120890 INC:
REVIEWED FOR
SS ☑ FLS ☑ ACS ☑
DATE: 10/25/2023

TLCDARCHITECTURE
520 Third St. #250
Santa Rosa, CA 95401
o: 707.525.5600
f: 707.525.5616
tlcd.com

CONSULTANT:
TEP ENGINEERING
880 Second Street
Santa Rosa, CA 95404-4610
707.538.0400 office
707.538.0406 fax

STAMP

REGISTERED PROFESSIONAL ENGINEER
M29511
Exp.Date 6-30-25
MECHANICAL
STATE OF CALIFORNIA

REVISIONS:

Number	Date	Description

NAPA VALLEY COLLEGE WINE EDUCATION CENTER

2277 NAPA VALLEJO HWY NAPA, CA 94558

NAPA VALLEY COLLEGE
SSA APPLICATION NUMBER

TEP PROJECT NUMBER
TEP 83600

DATE
10/11/2023

PLUMBING DETAILS

P-503

© THESE DRAWINGS ARE INSTRUMENTS OF SERVICE AND ARE THE SOLE PROPERTY OF TLCD ARCHITECTURE. ANY USE WITHOUT WRITTEN CONSENT IS PROHIBITED.

10/9/2023 9:52:21 PM

HOT WATER DEMANDS

	FIXTURE	# UNIT	GPH	TOTAL GPH
1	JANITOR'S SINK	1	15	15
2	HOSE STATION	1	45	45
3	HAND SINK / LAVATORIES	7	10	70
4	KITCHEN SINK	2	10	20
5	GLASSWASHER	2	20	40
6	KITCHEN SINK	2	45	90
7		0	15	0
9		0	18	0
10		0	20	0
11		0	15	0
12		0	60	0
			TOTAL	280

STORAGE WATER HEATER TYPE

USE %	TOTAL GPH (DEMAND FACTOR)	280	GPH	
100	HEAVY USE 100% (GPH X 60°F RISE X 11)	185	MBH	
90	MEDIUM USE 90% (GPH X 60°F RISE X 11)	166	MBH	
80	LIGHT USE 80% (GPH X 60°F RISE X 11)	148	MBH	

WH-1 WATER HEATER SYSTEM CAPACITY: 250 MBH - COMPLIES

WATER HEATER WH-1 PHASE 1 BUILDING

HOT WATER DEMANDS

	FIXTURE	# UNIT	GPH	TOTAL GPH
1	KITCHEN SINK	3	20	60
2	GLASSWASHER	1	20	20
			TOTAL	80

STORAGE WATER HEATER TYPE

USE %	TOTAL GPH (DEMAND FACTOR)	80	GPH	
100	HEAVY USE 100% (GPH x0.149 = KW)	11.9	KW	
90	MEDIUM USE 90% (GPH x0.149 = KW)	10.7	KW	
80	LIGHT USE 80% (GPH x0.149 = KW)	9.5	KW	

WH-2 WATER HEATER SYSTEM CAPACITY: 10 KW - COMPLIES

WATER HEATER WH-2 SERVING PHASE 2 BUILDING

1 HOT WATER DEMAND CALCS

NOT TO SCALE

3650
Napa Valley College Wine Education Center

Date: 3/13/2023
By: SH

Copper

Filename:

QTY	WSFU EA CW	WSFU EA HW	WSFU EA TOTAL	WSFU, TOTAL CW	WSFU, TOTAL HW	WSFU, TOTAL TOTAL	DRAIN FIXTURE UNITS DFU EA.	DRAIN FIXTURE UNITS DFU TOTAL
	0.75	0.75	1.00	0.00	0.00	0	1.0	0.0
	1.50	1.50	2.00	0.00	0.00	0	2.0	0.0
	3.00	3.00	4.00	0.00	0.00	0	2.0	0.0
	7.50	7.50	10.00	0.00	0.00	0	2.0	0.0
	0.75	0.75	1.00	0.00	0.00	0	2.0	0.0
	1.00	-	1.00	0.00	0.00	0	2.0	0.0
	1.125	1.125	1.50	0.000	0.000	0.0	2.0	0.0
	1.00	-	1.00	0.00	0.00	0		0.0
	3.00	3.00	4.00	0.00	0.00	0	2.0	0.0
	7.50	7.50	10.00	0.00	0.00	0	8.0	0.0
4	0.75	0.75	1.00	3.00	3.00	4	1.0	4.0
	-	1.500	1.50	0.00	0.00	0.0	2.0	0.0
	-	8.000	8.00	0.00	0.00	0	8.0	0.0
1	0.50	-	0.50	0.50	0.00	0.5	0.5	0.5
	0.75	-	0.75	0.00	0.00	0.00	0.5	0.0
4	0.75	0.75	1.00	3.00	3.00	4	1.0	4.0
1	2.50	-	2.50	2.50	0.00	2.5		0.0
3	1.00	-	1.00	3.00	0.00	3		0.0
	1.00	-	1.00	0.00	0.00	0	3.0	0.0
10	1.125	1.125	1.50	11.250	11.250	15.0	2.0	20.0
	1.125	1.125	1.50	0.000	0.000	0.0	2.0	0.0
7	0.75	0.75	1.00	5.25	5.25	7	2.0	14.0
1	2.25	2.25	3.00	2.25	2.25	3	3.0	3.0
	1.50	1.50	2.00	0.00	0.00	0	2.0	0.0
	1.125	1.125	1.50	0.000	0.000	0.0	2.0	0.0
	3.00	3.00	4.00	0.00	0.00	0	3.0	0.0
	3.00	3.00	4.00	0.00	0.00	0		0.0
	1.50	-	1.50	0.00	0.00	0		0.0
1	4.00	-	4.00	4.00	0.00	4	2.0	2.0
	3.00	3.00	4.00	0.00	0.00	0	2.0	0.0
	2.50	-	2.50	0.00	0.00	0.0	3.0	0.0
6	5.00	-	5.00	30.00	0.00	30	3.0	18.0
				64.75	24.75	73		
						59		
						17		
						5		
						64		
								66

	55.0 PSI	
	0.0 PSI	*use actual meter chart or Chart A-1*
	0.0 PSI	*use Pressure Reducing valve chart*
	10.0 PSI	*use Backflow chart*
10 FT =	4.3 PSI	*max. height to last fixture*
ENT	0.0 PSI	
	20.0 PSI	*(min 20 if tank, 25 for flush valve)*
	20.7000 PSI	
	0.0 PSI	
	100 FT	*longest run*
	150 FT	*with fittings*
F PIPE	13.8 PSI	
" PIPE	31.9 FT	

WATER PIPE SIZING CALCULATIONS

PROJECT NAME: Napa Valley College Wine Education Center
PROJECT NUMBER: 3650.00
DATE: 3/13/23

AVAILABLE WATER PRESSURE CALCULATIONS PER CPC TABLE A 103.1

TOTAL FIXTURE UNITS:	73
COLD WATER DEMAND FLOW RATE (GPM):	64
HOT WATER FIXTURE UNITS:	25
HOT WATER DEMAND FLOW RATE (GPM):	17
WATER MAIN PRESSURE (PSIG)	55
PRESSURE DROP THRU METER (PSIG)	0
PRESSURE REDUCING VALVE - PRESSURE (IF REQUIRED)	0
PRESSURE DROP THRU BACKFLOW PREVENTER (PSIG)	10
ELEVATION PRESSURE DROP (PSIG)	4.3
PRESSURE DROP THROUGH WATER TREATMENT (PSIG)	0
RESIDUAL PRESSURE REQUIRED AT LAST OUTLET (PSIG)	20
NET PRESSURE AVAILABLE (PSIG)	**21**
PRESSURE BOOSTER PUMP (IF REQUIRED) (PSIG)	0
STATIC HEIGHT OF HIGHEST FIXTURE ABOVE MAIN (FT)	10
TOTAL DEVELOPED LENGTH OF LONGEST PIPE RUN (FT)	150
MAXIMUM PIPE FRICTION LOSS (PSI) PER 100 FT OF PIPE	**13.8**

COLD WATER PIPE SIZE SCHEDULE (@ MAX. ALLOWABLE PD/100 FT)

NOMINAL PIPE SIZE	MAX. GPM	VEL. (FT/S)	FIXTURE UNITS MAX. FV	FIXTURE UNITS MAX. FT	PRESS. DROP (PSI)	NOMINAL PIPE SIZE
1/2	3.9	5.4	---	3	13.20	1/2
3/4	10.4	6.9	---	13	13.72	3/4
1	20.6	8.0	---	30	13.24	1
1 1/4	31.3	8.0	14	56	10.36	1 1/4
1 1/2	44.4	8.0	35	103	8.46	1 1/2
2	77.2	8.0	132	254	6.13	2
2 1/2	119.0	8.0	329	455	4.76	2 1/2
3	169.8	8.0	666	719	3.87	3
4	298.6	8.0	1668	1668	2.78	4
5	465.4	8.0	3150	3150	2.15	5
6	669.0	8.0	4480	4480	1.74	6
8	1168.6	8.0	8300	8300	1.26	8

CW BRANCH & HOT WATER PIPE SIZE SCHEDULE (@ MAX. ALLOWABLE PD/100 FT)

NOMINAL PIPE SIZE	MAX. GPM	VEL. (FT/S)	FIXTURE UNITS MAX. FV	FIXTURE UNITS MAX. FT	PRESS. DROP (PSI)	NOMINAL PIPE SIZE
1/2	3.6	5.0	---	3	11.59	1/2
3/4	7.5	5.0	---	8	7.57	3/4
1	12.9	5.0	---	16	5.55	1
1 1/4	19.6	5.0	---	28	4.34	1 1/4
1 1/2	27.7	5.0	10	46	3.55	1 1/2
2	48.2	5.0	44	119	2.57	2
2 1/2	74.4	5.0	124	245	2.00	2 1/2
3	106.2	5.0	270	406	1.62	3
4	186.6	5.0	811	840	1.17	4
5	---	---	---	---		5
6	---	---	---	---		6
8	---	---	---	---		8

NOTES:
1. MAXIMUM CW BRANCH & HW VELOCITY 5.0
2. MAXIMUM COLD WATER VELOCITY (ft/s): 8.0

2 WATER AND DWV PIPE SIZING CALCS

NOT TO SCALE

10/9/2023 9:52:22 PM

AGENCY APPROVAL STAMP:

IDENTIFICATION STAMP
DIV. OF THE STATE ARCHITECT
APP: 01-120890 INC:
REVIEWED FOR
SS ☑ FLS ☑ ACS ☑
DATE: 10/25/2023

TLCDARCHITECTURE
520 Third St. #250
Santa Rosa, CA 95401
o: 707.525.5600
f: 707.525.5616
tlcd.com

CONSULTANT:
TEP ENGINEERING
880 Second Street
Santa Rosa, CA 95404-4610
707.538.0400 office
707.538.0406 fax

STAMP:

REGISTERED PROFESSIONAL ENGINEER
TIM S. BOLZA
M29511
Exp.Date 6-30-25
MECHANICAL
STATE OF CALIFORNIA

REVISIONS:

Number	Date	Description

NAPA VALLEY COLLEGE WINE EDUCATION CENTER

2277 NAPA VALLEJO HWY
NAPA, CA 94558

NAPA VALLEY COLLEGE
DSA APPLICATION NUMBER:

TEP PROJECT NUMBER:
TEP 8360

DATE:
10/11/2023

PLUMBING DIAGRAMS AND CALCULATIONS

P-601

© THESE DRAWINGS ARE INSTRUMENTS OF SERVICE AND ARE THE SOLE PROPERTY OF TLCD ARCHITECTURE, AND USE WITHOUT WRITTEN CONSENT IS PROHIBITED.

MECHANICAL SYMBOLS

SYMBOL	ABBREVIATION	DESCRIPTION
	CD	SUPPLY DIFFUSER
	RAG, EAG	RETURN/EXHAUST AIR GRILLE
	VD	VOLUME DAMPER
14x12		DUCT SIZE, FIRST NUMBER IS IN PLANE OF PAGE
14x12L	L	LINED DUCTWORK
		DEMOLITION
		TURNING VANES
	FC	FLEXIBLE CONNECTION
	FD	FIRE OR FIRE SMOKE DAMPER
		SUPPLY DUCT UP
		RETURN/EXHAUST DUCT UP
T	T	THERMOSTAT
	POC	POINT OF CONNECTION
SD	SD	DUCT SMOKE DETECTOR
M		MOTOR-ACTUATOR
	AFF	ABOVE FINISHED FLOOR
	BDD	BACK DRAFT DAMPER
	CTE	CONNECT TO EXISTING
	DE	DRYER EXHAUST
	DG	DOOR GRILLE
	DN	DOWN
	DWG	DRAWING
	(E)	EXISTING
	FLA	FULL LOAD AMPS
	GSM	GALVANIZED SHEET METAL
	IJS	IN JOIST SPACE
	KE	KITCHEN EXHAUST
	MBH	THOUSAND BTU PER HOUR
	MCA	MINIMUM CIRCUIT AMPS
	MOCP	MAXIMUM OVER CURRENT PROTECTION
	NTS	NOT TO SCALE
	OA	OUTSIDE AIR
	(RE)	RELOCATE EXISTING
	RL	REFRIGERANT LIQUID
	RS	REFRIGERANT SUCTION
	SAD	SEE ARCHITECTURAL DRAWINGS
	SCD	SEE CIVIL DRAWINGS
	SDS	SELF DRILLING SCREW (SIMPSON STRONG TIE)
	SED	SEE ELECTRICAL DRAWINGS
	SFD	SEE FOOD SERVICE DRAWINGS
	SHD	SEE HYDRONIC DRAWINGS
	SMD	SEE MECHANICAL DRAWINGS
	SMS	SHEET METAL SCREW
	SPD	SEE PLUMBING DRAWINGS
	SSD	SEE STRUCTURAL DRAWINGS
	TYP	TYPICAL
	U/C	UNDERCUT DOOR 5/8"
	UON	UNLESS OTHERWISE NOTED
	VD	VOLUME DAMPER
	VIF	VERIFY IN FIELD
	VTR	VENT THROUGH ROOF

MECHANICAL EQUIPMENT SCHEDULE - PHASE 1

MARK	SERVING	MAKE / MODEL	DESCRIPTION	ACCESSORIES / OPTIONS	COOLING CAPACITY	HEATING CAPACITY	AIRFLOW / PRESSURE	Min. OA CFM	NOTES	VOLTS	PH	FLA	MCA	MOCP	WEIGHT
BC-1	N/A	MITSUBISHI CMB-P1008NU-JA1	Main Branch Controller with 8 branches	BV Series ball valves for each branch connection						208 V	1 P			15 A	125 LBS
C	N/A	MITSUBISHI unit controller	See fan coil system description for model						Install devices such that all controls are within 48" of the finished floor.						
CN-1	N/A	Mitsubishi EW-50A and Software, PAC-SC51KUA Power supply BacNet interface	Centralized Controller for up to 50 fan coils with PC Monitoring with BacNet interface, power supply							208/230 V	1 P	1 A			
HP-1	N/A	MITSUBISHI PURY-EP96TNU-A	Nominal 8 ton outdoor high efficiency heat pump Unit, Variable Refrigerant Flow Zoning system, Heat Recovery unit		96.0 MBH @ 95 F (ARI), 13.7 EER, 26.5 IEER	108.0 MBH @ 47 F (ARI), 3.94 COP, 23.5 SCHE				208 V	3 P		31 A	45 A	613 LBS
FC-1	SENSORY PREP 114-2	MITSUBISHI PEFY-P12NMAU-E4	Nominal 1 ton Horizontal ducted fan coil, Medium static	FBM FILTER BOX WITH MERV 13 AIR FILTER, PAR-CT01MAU-SB MA CONTROLLER, DPLS1 DRAIN PAN LEVEL SENSOR/ WIRE HARNESS	12.0 MBH	13.5 MBH	318 CFM @ 0.6"WC	50 CFM	Program fan for "MED" speed	208/230 V	1 P		2.13 A	15 A	70 LBS
FC-2	LAB PREP 105-2	MITSUBISHI PEFY-P24NMAU-E4	Nominal 2 ton Horizontal ducted fan coil, Medium static	FBM FILTER BOX WITH MERV 13 AIR FILTER, PAR-CT01MAU-SB MA CONTROLLER, DPLS1 DRAIN PAN LEVEL SENSOR/ WIRE HARNESS	24.0 MBH	27.0 MBH	742 CFM @ 0.6"WC	130 CFM	Program fan for "MED" speed	208/230 V	1 P		2.88A	15 A	70 LBS
FC-3, FC-4	OFFICE 102-2, OFFICE 103-2	MITSUBISHI PLFY-EP12NEMU-ER1	Nominal 1 ton ductless 4-way ceiling cassette, built in condensate lift, occupancy detection	PAR-CT01MAU-SB MA CONTROLLER, MULTI FUNCTION CASEMENT WITH MERV 13 FILTER.	12.0 MBH	13.5 MBH	494 CFM (LOW)	30 CFM (SUPPLIED BY SF-1)	Program fan for "LOW" speed	208/230 V	1 P		0.39 A	15 A	46 LBS
FC-5	HALL & RESTROOMS	MITSUBISHI PEFY-P36NMAU-E4	Nominal 3 ton Horizontal ducted fan coil, Medium static	FBM FILTER BOX WITH MERV 13 AIR FILTER, PAR-CT01MAU-SB MA CONTROLLER, DPLS1 DRAIN PAN LEVEL SENSOR/ WIRE HARNESS	36.0 MBH	40.0 MBH	1077 CFM @ 0.6"WC	310 CFM	Program fan for "MED" speed	208/230 V	1 P		3.4 A	15 A	110 LBS
OU-1, OU-2	ELEC & BDF ROOMS	MITSUBISHI PUZ-A24HKA7	Nominal 2 ton split system heat pump, ductless high wall fan coil, quiet operation, microprocessor control. condensing unit, low sound level, side discharge, inverter driven scroll compressor.	WIND BAFFLE, M-NET COMMUNICATION	24.0 MBH AT ARI; 21.4 SEER, 12.2 EER	26.0 MBH (47 F), 15.7 MBH (17 F) at ARI; 11.0 HSPF, 4.35 COP (47 F), 2.62 COP (17 F)				208 V	1 P		19 A	26 A	153 LBS
IU-1, IU-2		MITSUBISHI PKA-A24NHA7	Nominal 2 ton ductless high wall fan coil	PAR-CT01MAU-SB HARD WIRED CONTROLLER (THERMOSTAT) DPLS2 DRAIN PAN LEVEL SENSOR/ WIRE HARNESS, REFCO GOBI II CONDENSATE PUMP			775 CFM (HIGH)	0 CFM	Refrigerant piping: 5/8" suction, 3/8" liquid (max 100 feet)	208 V	1 P	0.4 A	1 A	15 A	46 LBS
RTU-1	WINE LAB 104	TRANE WHC074	Nominal 6 ton high efficiency packaged rooftop heat pump unit	18 KW (13.5 KW @ 208 V) supplementary heater, Curb: CanFab 6042-IC11A-CBC Seismically calculated spring isolation welded construction, 11" Base height, 24.5" finish curb height; Economizer: CanFab 6144-MPE24B-1F Modulating Power Exhaust with Trane dual dry bulb Reliatel controls, BACnet controls interface. Filters: 2" MERV 13.	78.0 MBH @ ARI, 12.1 EER, 15.5 IEER	75.0 MBH @ 47 F ARI, 6.28 KW, 3.5 COP, 40.0 MBH @ 17 F ARI 5.21 KW / 2.25 COP	2400 CFM @ 1.0" ESP, 1.01 BHP	460 CFM	Unit: 1,218-LBS; Economizer: 331-LBS; Isolation Curb: 474-LBS	208 V	3 P		89 A	90 A	2,023 LBS
									Power exhauster >>>	208 V	3 P	2.9 A	3.6 A	6.5 A	
RTU-2, RTU-3	SENSORY 118, SENSORY 120	TRANE WHC060	Nominal 5 ton high efficiency packaged rooftop heat pump unit	12 KW (9.0 KW @ 208 V) supplementary heater, Curb: CanFab 6042-IC11A-CBC Seismically calculated spring isolation welded construction, 11" Base height, 24.5" finish curb height; Economizer: CanFab 6142-MPE20B-1F Modulating Power Exhaust with Trane dual dry bulb Reliatel controls, BACnet controls interface. Filters: 2" MERV 13.	61.0 MBH TC, 48.93 MBH SC, 13.0 EER, 16.4 SEER, 12.5 EER2, 16.1 SEER2	57.0 MBH @ 47 F: 4.64 KW / 3.60 COP, 4.14 KW / 3.60 COP2 34.4 MBH @ 17 F: 4.38 KW, 2.30 COP, 3.98 KW, 2.30 COP2	1,990 CFM @ 0.75" ESP, 0.67 BHP	440 CFM	Unit: 1,067-LBS; Economizer: 331-LBS; Isolation Curb: 474-LBS	208 V	3 P		63 A	70 A	1,872 LBS
									Power exhauster >>>	208 V	3 P	2.9 A	3.6 A	6.5 A	
SC		GREENHECK 385803	VAR-GREEN remote fan speed controller												
SD	N/A	Furnished and wired to fire alarm by Fire Alarm contractor, mounted and wired to unit by Mechanical contractor	Duct mounted smoke detector						Wire to shut down unit upon detection of products of combustion. Connect auxiliary contact to Fire alarm system						
ST-1	LAB HOOD	FANTECH LD 12	Duct Silencer Sound Trap for circular ducts, 2" insulation, 22 gauge galvanized steel outer shell, perforated inner liner												44 LBS
T & TC	N/A	Delta Controls enteliZONE	Wall mounted zone controller with optional CO2 sensor (at TC)	Provide eZNS controller where needed to interface with unit.											

FAN SCHEDULE - PHASE 1

MARK	SERVING	MAKE / MODEL	DESCRIPTION	ACCESSORIES	AIRFLOW	RPM	SOUND LEVEL	NOTES	VOLTS	PHASE	FLA	MOTOR HP	WEIGHT
EF-1	RESTROOMS	GREENHECK CUE-100-VG	Direct drive roof mounted upblast exhaust fan, backwards incline wheel, Spun Aluminum housing, Vari-green variable speed EC motor, disconnect switch	12" GPF roof curb, backdraft damper	800 CFM @ 0.5"WC	1304 FRPM	6.9 Sones, 54 dBA	Wire to operate from controls time clock	120 V	1 P	4 A	1/4 HP	65 Lbs
EF-2, EF-3	SENSORY PREP, VIT PREP	GREENHECK CUE-095-VG	Direct drive roof mounted upblast exhaust fan, backwards incline wheel, Spun Aluminum housing, Vari-green variable speed EC motor, disconnect switch	12" GPF roof curb, backdraft damper, wall speed controller switch (tag SC on plan)	300 CFM @ 0.4"WC	1212 FRPM	5.9 Sones, 50 dBA	Wire to wall switch	120 V	1 P	3 A	1/6 HP	50 Lbs
EF-4	WINE LAB	GREENHECK CUE-140-VG	Direct drive roof mounted upblast exhaust fan, backwards incline wheel, Spun Aluminum housing, Vari-green variable speed EC motor, disconnect switch, wall speed control switch	12" GPF roof curb, backdraft damper, wall speed controller switch (tag SC on plan)	1,200 CFM @ 0.4"WC	931 FRPM	7.5Sones, 55 dBA	Wire to wall switch	120 V	1 P	4 A	1/4 HP	54 Lbs
HE-1	VIT LAB HOOD	GREENHECK VEKTO-H-10-M10-X	Fume exhaust system with high plume discharge, curb mounted, outdoor weatherized, constant volume with motorized bypass air plenum, steel construction with coating, NEMA 3R disconnect switch, UL-705 rated, direct drive, NEMA premium efficient VFD rated motor with sealed for life bearings, sure-flow flow station, factory vibration tested, 1 year warranty	Permatector coating, NEMA premium efficient TEFC motor with 1.15-SF, fan vibration and status monitoring system (24 VAC), 2 position motorized bypass damper, 12" roof curb	830 CFM @ 0.6"WC @ 210 CFM MIN (620 CFM BYPASS)	2761 FRPM	69 dBA	To operate continuously	208 V	3 P		1 HP	431 Lbs
SF-1	OFFICE OA	PANASONIC FV-15NLFS1	Inline fresh air supply fan, ECM motor with 9 speed settings, quiet operation, Energy star rated, 3 year warranty, 6 year motor warranty, MERV 13 air filter.	Backdraft damper	60 CFM @ 0.3" WC		2 Sones	To operate with fan coils, see controls diagram.	120 V	1 P	0.5 A		20 Lbs.

MECHANICAL EQUIPMENT SCHEDULE - PHASE 2

MARK	SERVING	MAKE / MODEL	DESCRIPTION	ACCESSORIES / OPTIONS	COOLING CAPACITY	HEATING CAPACITY	AIRFLOW / PRESSURE	Min. OA CFM	NOTES	VOLTS	PH	FLA	MCA	MOCP	WEIGHT
RTU-4	TASTING	TRANE WHC060	Nominal 5 ton high efficiency packaged rooftop heat pump unit	12 KW (10.4 KW @ 208 V) supplementary heater, Curb: CanFab 6042-IC11A-CBC Seismically calculated spring isolation welded construction, 11" Base height, 24.5" finish curb height; Economizer: CanFab 6142-MPE20B-1F Modulating Power Exhaust with Trane dual dry bulb Reliatel controls, BACnet controls interface. Filters: 2" MERV 13.	61.0 MBH TC, 48.93 MBH SC, 13.0 EER, 16.4 SEER, 12.5 EER2, 16.1 SEER2	57.0 MBH @ 47 F: 4.64 KW / 3.60 COP, 4.14 KW / 3.60 COP2 34.4 MBH @ 17 F: 4.38 KW, 2.30 COP, 3.98 KW, 2.30 COP2	1,990 CFM @ 0.75" ESP, 0.67 BHP	440 CFM	Unit: 1,067-LBS; Economizer: 331-LBS; Isolation Curb: 474-LBS	208 V	3 P		63 A	70 A	1,872 LBS
									Power exhauster >>>	208 V	3 P	2.9 A	3.6 A	6.5 A	

FAN SCHEDULE - PHASE 2

MARK	SERVING	MAKE / MODEL	DESCRIPTION	ACCESSORIES	AIRFLOW	RPM	SOUND LEVEL	NOTES	VOLTS	PHASE	FLA	MOTOR HP	WEIGHT
EF-5	TASTING PREP	GREENHECK CUE-080-VG	Direct drive roof mounted upblast exhaust fan, backwards incline wheel, Spun Aluminum housing, Vari-green variable speed EC motor, disconnect switch	12" GPI roof curb, backdraft damper	300 CFM @ 0.35"WC	1492 FRPM	6.8 Sones, 54 dBA	**Wire to operate from wall switch**	120 V	1 P	2 A	1/10 HP	43 Lbs

AIR OUTLET SCHEDULE

Mark	Make / Model	Alt Manufacturer	Description
CD-1, CD-1D	TITUS OMNI, BORDER 3 (NT AT NARROW T-BAR)	PRICE OR KREUGER	PANEL FACE, STEEL CONSTRUCTION, 24x24 T-BAR LAYIN, PROVIDE WITH DEFLECTORS WHERE DIRECTED BLOW PATTERN IS SHOWN ON PLANS.
CR-1, CR-1D	TITUS 355RL, BORDER 3 (NT AT NARROW T-BAR)	PRICE OR KREUGER	STEEL CONSTRUCTION, LOUVERED BLADES ON 1/2" CENTERS, 24x24 T-BAR LAYIN.
CE-1, CE-1D, CR-2, CR-2D, EG-1, EG-1D	TITUS 355RL, BORDER 1	PRICE OR KREUGER	STEEL CONSTRUCTION, LOUVERED BLADES ON 1/2" CENTERS, SURFACE MOUNT, OPPOSED BLADE DAMPER (AT CE-1D, CR-2D, EG-1D)
LD-1, LR-1	TITUS CT-480, BORDER TYPE 12, TYPE C FASTENERS	PRICE OR KREUGER	SIDEWALL MOUNT, ALUMINUM CONSTRUCTION, LINEAR BAR GRILLE 1/4" BLADE SPACING, CONCEALED FASTENERS, ANODIZED FINISH (COLOR TO BE SELECTED BY ARCHITECT FROM STANDARD TITUS COLORS)
SG-1, SG-1D	TITUS 272FL, BORDER 1	PRICE OR KREUGER	ALUMINUM CONSTRUCTION, AEROBLADES ON 3/4" CENTERS, OPPOSED BLADE DAMPER (AT SG-1D)

DUCTING MATERIALS SCHEDULE

SEE SPECIFICATIONS SECTION 23 00 00 FOR COMPLETE REQUIREMENTS

OUTSIDE AIR, SUPPLY, RETURN AIR DUCTS	OUTDOORS	RECTANGULAR	SHOP FABRICATED PER SMANCA AND MINIUM 20 GAUGE GALVANIZED SHEET METAL WITH GOVERMENT CLIP OR TDC (FLANGE PART OF DUCT) CONNECTORS, PITTSBURG LONGITUDINAL SEAMS WITH SEALANT IN SEAMS, SEAL ALL JOINTS WITH 2 LAYERS OF UNITED MCGILL OUTDOOR DUCT SEALER.
	INDOORS	ROUND	GALVANIZED SHEET METAL, GAUGE PER SMACNA 4" PRESSURE CLASS, 26 GAUGE MINIMUM. AT FINAL CONNECTION: ATCO #031, R-8 PRE- INSULATED, 10" WC PRESSURE RATED
		RECTANGULAR	GALVANIZED SHEET METAL, GAUGE PER SMACNA 2" PRESSURE CLASS, 26 GAUGE MINIMUM. SEAL ALL JOINTS WITH DUCT SEALER.
EXHAUST DUCTS	OUTDOORS	RECTANGULAR	SHOP FABRICATED PER SMANCA AND MINIUM 20 GAUGE GALVANIZED SHEET METAL WITH GOVERMENT CLIP OR TDC (FLANGE PART OF DUCT) CONNECTORS, PITTSBURG LONGITUDINAL SEAMS WITH SEALANT IN SEAMS, SEAL ALL JOINTS WITH 2 LAYERS OF UNITED MCGILL OUTDOOR DUCT SEALER.
	INDOORS	RECTANGULAR	SHOP FABRICATED PER SMANCA AND MINIMUM 26 GAUGE GALVANIZED SHEET METAL WITH S-DRIVE OR DUCT MATE CONNECTOR SYSTEM.
		ROUND	GALVANIZED SHEETMETAL, 6" AND SMALLER 26 GAUGE SPIRAL OR SNAPLOK PIPE, 7" AND LARGER TO BE PER SMACNA 2" PRESSURE CLASS AND MINIMUM 26 GAUGE. FITTINGS TO BE SEALED.

MECHANICAL MATERIALS SCHEDULE

SEE SPECIFICATIONS SECTION 23 00 00 FOR COMPLETE SPECIFICATIONS AND REQUIREMENTS

ITEM	MAKE / MODEL	MATERIAL DESCRIPTION
AIR FILTERS	AAF FLANDERS PREPLEAT	MERV 13 WITH DOUBLE WALL FRAME.
HANGER STRUT	SUPERSTRUT SERIES 1400 "GOLDGALV" or equivalent by B-LINE	14 GAUGE, 0.5 MIL ELECTRO GALVANIZED PLATED COATING
DUCT LINER	OWENS CORNING QuietR. or equivalent by CERTAINTEED OR KNAUF.	FIBERGLASS, 2" THICK AT OUTDOORS OR UNCONDITIONED SPACES, 1" THICK AT CANS OR LOCATIONS WITHIN CONDITIONED ENVELOPE (or 1/2" THICK WHERE NOTED).
REFRIGERANT PIPING SOFT COPPER WITH PRE-INSULATED LINES	MUELLER DURAGUARD UV, 3/4" WALL (R5)	TYPE L ACR SOFT COPPER WITH ELASTOMERIC INSULATION WITH COATED UV OUTER LAYER, 700 PSI RATED, ASTM E84 25/50 FLAME SMOKE RATING, ASTM B1003
REFRIGERANT PIPING	MUELLER ACR TUBE	TYPE L ACR COPPER, NITROGENIZED, CLEANED AND CAPPED UNDER PRESSURE.
REFRIGERANT PIPE INSULATION	ARMACELL ARMAFLEX AC	ELASTOMERIC INSULATION, minimum 3/4" WALL THICKNESS.
REFRIGERANT PIPE INSULATION JACKETING	PROTO CORP LOSMOKE	0.03" WALL THICKNESS, ASTM STD C-585-76, COLOR WHITE
DUCT SEALER, INDOOR	UNITED MCGILL UNI-FLEX	WATER BASED DUCT SEALER, UL LISTED, LOW VOCs
DUCT SEALER, OUTDOORS	HARDCAST 321	WATER BASED OUTDOOR, GRAY SMOOTH FINISH, LOW VOCs
DUCT WRAP, INTERIOR IN CONDITION SPACE	OWENS CORNING SoftR. or equivalent by CERTAINTEED OR KNAUF.	FIBERGLASS WITH FRK FOIL FACE, 1-1/2" THICKNESS, TYPE 75, R-4.2. OR APPROVED EQUIVALENT BY CERTAINTEED OR KNAUF.
DUCT WRAP, INTERIOR ATTIC VENTED	OWENS CORNING SoftR. or equivalent by CERTAINTEED OR KNAUF.	FIBERGLASS WITH FRK FOIL FACE, 3" THICKNESS, TYPE 75, R-8. OR APPROVED EQUIVALENT BY CERTAINTEED OR KNAUF.
VOLUME DAMPERS	GREENHECK or approved equivalent.	14" diameter or smaller: GREENHECK VCDR-50. 16" diameter and larger: GREENHECK VCDRM-50. RECTANGULAR: GREENHECK VCD-15/18. CONTROL DAMPERS: GREENHECK VCD-40/42/43 or approved equivalent.
PIPE HANGERS AND SUPPORTS	ARMAFLEX ARMAFIX IPH / NPH	INSULATED PIPE HANGER INSERT WITH ALUMINUM OR STAINLESS STEEL SHELL
FLEXIBLE DUCT CONNECTORS INDOORS	DURODYNE EXCELON 10210 MBX	EXCELON FABRIC ATTACHED WITH GRIP LOCK SEAM TO 24 GAUGE GSM, RATED -40 TO 200 F
DUCT TURNING VANE	DUCTMATE 4AVGA24	DOUBLE WALL ACOUSTICAL VANE, 24 GAUGE
CONTROL WIRING, LOW VOLTAGE	HONEYWELL GENESIS	Jacketed cable with18 AWG solid copper conductors, CL2P plenum rated tear resistant jacket, meeting ISO 9001:2000 standards
DUCT ACCESS DOORS	ELMDOOR DT	DOUBLE WALL INSULATED
WALL AND CEILING ACCESS DOORS	ELMDOR	Wall & ceilings, tile and wood surfaces: ELMDOR DW-SS, 16 gauge type 304 brushed stainless steel, minimum size 10x10. Wall & ceilings, gypsum surfaces: ELMDOR DWB, 16 gauge galvannealed steel with prime finish, minimum size 10x10. Wall & ceilings, fire rated: ELMDOR FRC or FR, minimum size 10x10. Optional Keyed lock on all access doors.
PIPE MARKERS	SETON Opti-Code or equivalent by MSI	Self-adhesive OSHA and ASME (ANSI) standard A13.1-2007.
EQUIPMENT NAMEPLATES	SETON custom	Engraved acrylic (plastic), black with white border, 3" wide by 1" high with minimum 1/4" lettering.

MECHANICAL GENERAL NOTES

1. PROVIDE MINIMUM OUTSIDE AIR TO HVAC UNITS PER MECHANICAL SCHEDULE
2. PROVIDE FLEXIBLE PIPE AND DUCT CONNECTORS TO ALL EQUIPMENT WHICH IS SUSPENDED OR MOUNTED ON VIBRATION ISOLATORS.
3. MAINTAIN A MINIMUM 10'-0" CLEAR BETWEEN HVAC EQUIPMENT AIR INTAKES AND PLUMBING VENTS, VENTS SERVING FUEL BURNING EQUIPMENT OR EXHAUST OUTLETS WITH OBJECTIONABLE ODORS, FUMES OR FLAMMABLE VAPORS; OR 10 FEET ABOVE THE SURFACE OF ANY ABUTTING PUBLIC WAY OR DRIVEWAY; OR WHEN IT IS IN A HORIZONTAL POSITION IN A SIDEWALK, STREET, ALLEY OR DRIVEWAY.
4. PROVIDE UL FIRE STOPPING, PER UL LISTING, WHERE PIPES OR DUCTS PASS THROUGH FIRE RATED CONSTRUCTION. SEE ARCHITECTURAL DRAWINGS FOR LOCATIONS OF FIRE RATED ASSEMBLES. AT SHAFT FLOOR PENETRATIONS PROVIDE FIRE STOPPING AT VENTS, PIPES AND DUCTS PASSING THROUGH FLOORS PER CBC SECTION 711.
5. ALL EXPOSED CONTROL WIRING SHALL BE INSTALLED IN EMT CONDUIT UNLESS CONCEALED IN WALLS OR ATTIC SPACES. ALL WIRING IN ATTIC SPACES SHALL BE NEATLY STAPLED OR ATTACHED TO FRAMING AT MINIMUM 10' INTERVALS.
6. LABEL ALL EQUIPMENT WITH ENGRAVED PLASTIC TAGS PER SPECS WITH EQUIPMENT TAG NUMBERS.
7. DUCT LINER TO HAVE MOLD, HUMIDITY AND EROSION RESISTANT INTERIOR SURFACES THAT MEET OR EXCEED REQUIREMENTS IN ACCORDANCE WITH CMC SECTION 605.0.
8. INSULATION APPLIED TO THE EXTERIOR SURFACES OF DUCTS LOCATED IN THE BUILDING SHALL HAVE A FLAME SPREAD OF NOT MORE THAN 25 AND A SMOKE- DENSITY NOT EXCEEDING 50 WHEN TESTED AS A COMPOSITE INSTALLATION IN ACCORDANCE WITH CMC SECTION 605.0.
9. INSTALL PVC JACKETING OVER INSULATION ON ALL OUTDOOR REFRIGERANT SUCTION PIPING.
10. INSTALLATION INSTRUCTIONS FOR ALL EQUIPMENT SHALL BE MADE AVAILABLE TO THE BUILDING INSPECTOR AT THE TIME OF INSPECTION.
11. REFER TO SPECIFICATION SECTION 23 00 00 FOR ADDITIONAL REQUIREMENTS.

10/9/2023 9:50:59 PM

MEP COMPONENT ANCHORAGE NOTE

ALL MECHANICAL, PLUMBING, AND ELECTRICAL COMPONENTS SHALL BE ANCHORED AND INSTALLED PER THE DETAILS ON THE DSA APPROVED CONSTRUCTION DOCUMENTS. THE FOLLOWING COMPONENTS SHALL BE ANCHORED OR BRACED TO MEET THE FORCE AND DISPLACEMENT REQUIREMENTS PRESCRIBED IN THE 2022 CBC, SECTIONS 1617A.1.18 THROUGH 1617A.1.26 AND ASCE 7-16 CHAPTERS 13, 26 AND 30.

1. ALL PERMANENT EQUIPMENT AND COMPONENTS.
2. TEMPORARY, MOVABLE OR MOBILE EQUIPMENT THAT IS PERMANENTLY ATTACHED (e.g. HARD WIRED) TO THE BUILDING UTILITY SERVICES SUCH AS ELECTRICITY, GAS OR WATER. "PERMANENTLY ATTACHED" SHALL INCLUDE ALL ELECTRICAL CONNECTIONS EXCEPT PLUGS FOR 110/220 VOLT RECEPTACLES HAVING A FLEXIBLE CABLE.
3. TEMPORARY, MOVABLE OR MOBILE EQUIPMENT WHICH IS HEAVIER THAN 400 POUNDS OR HAS A CENTER OF MASS LOCATED 4 FEET OR MORE ABOVE THE ADJACENT FLOOR OR ROOF LEVEL THAT DIRECTLY SUPPORT THE COMPONENT IS REQUIRED TO BE RESTRAINED IN A MANNER APPROVED BY DSA.

THE FOLLOWING MECHANICAL AND ELECTRICAL COMPONENTS SHALL BE POSITIVELY ATTACHED TO THE STRUCTURE BUT NEED NOT DEMONSTRATE COMPLIANCE WITH THE REFERENCES NOTED ABOVE. THESE COMPONENTS SHALL HAVE FLEXIBLE CONNECTIONS PROVIDED BETWEEN THE COMPONENT AND ASSOCIATED DUCTWORK, PIPING, AND CONDUIT. FLEXIBLE CONNECTIONS MUST ALLOW MOVEMENT IN BOTH TRANSVERSE AND LONGITUDINAL DIRECTIONS:

A. COMPONENTS WEIGHING LESS THAN 400 POUNDS AND HAVE A CENTER OF MASS LOCATED 4 FEET OR LESS ABOVE THE ADJACENT FLOOR OR ROOF LEVEL THAT DIRECTLY SUPPORT THE COMPONENT.

B. COMPONENTS WEIGHING LESS THAN 20 POUNDS, OR IN THE CASE OF DISTRIBUTION SYSTEMS, LESS THAN 5 POUNDS PER FOOT, WHICH ARE SUSPENDED FROM A ROOF OR FLOOR OR HUNG FROM A WALL.

THE ANCHORAGE OF ALL MECHANICAL, ELECTRICAL, AND PLUMBING COMPONENTS SHALL BE SUBJECT TO THE APPROVAL OF THE DESIGN PROFESSIONAL IN GENERAL RESPONSIBLE CHARGE OR STRUCTURAL ENGINEER DELEGATED RESPONSIBILITY AND ACCEPTANCE BY DSA. THE PROJECT INSPECTOR WILL VERIFY THAT ALL COMPONENTS AND EQUIPMENT HAVE BEEN ANCHORED IN ACCORDANCE WITH ABOVE REQUIREMENTS.

PIPING, DUCTWORK AND ELECTRICAL DISTRIBUTION SYSTEM BRACING NOTE

PIPING, DUCTWORK, AND ELECTRICAL DISTRIBUTION SYSTEMS SHALL BE BRACED TO COMPLY WITH THE FORCES AND DISPLACEMENTS PRESCRIBED IN ASCE 7-16 SECTION 13.3 AS DEFINED IN ASCE 7-16 SECTION 13.6.5, 13.6.6, 13.6.7, 13.6.8, AND 2022 CBC, SECTIONS 1617A.1.24, 1617A.1.25 AND 1617A.1.26.

THE METHOD OF SHOWING BRACING AND ATTACHMENTS TO THE STRUCTURE FOR THE IDENTIFIED DISTRIBUTION SYSTEM ARE AS NOTED BELOW. WHEN BRACING AND ATTACHMENTS ARE BASED ON A PREAPPROVED INSTALLATION GUIDE (e.g., OSHPD OPM FOR 2013 CBC OR LATER), COPIES OF THE BRACING SYSTEM INSTALLATION GUIDE OR MANUAL SHALL BE AVAILABLE ON THE JOBSITE PRIOR TO THE START OF AND DURING THE HANGING AND BRACING OF THE DISTRIBUTION SYSTEMS. THE STRUCTURAL ENGINEER OF RECORD SHALL VERIFY THE ADEQUACY OF THE STRUCTURE TO SUPPORT THE HANGER AND BRACE LOADS.

MECHANICAL PIPING (MP), MECHANICAL DUCTS (MD), PLUMBING PIPING (PP), ELECTRICAL DISTRIBUTION SYSTEMS (E):

MP[ ] MD[ ] PP[ ] E[ ] OPTION 1: DETAILED ON THE APPROVED DRAWINGS WITH PROJECT SPECIFIC NOTES AND DETAILS

MP[X] MD[X] PP[ ] E[ ] OPTION 2: SHALL COMPLY WITH THE APPLICABLE OSHPD PRE-APPROVAL OPM # 0043-13.

COMMERCIAL CAL-GREEN REQUIREMENTS

1. COMPLY WITH PROVISIONS OF THE CALIFORNIA GREEN BUILDING CODE (CGBC). BELOW ARE REQUIREMENTS DIRECTLY RELATED TO MECHANICAL SYSTEMS. SEE ARCHITECTURAL PLANS AND SPECIFICATION FOR FURTHER REQUIREMENTS INCLUDING ANY VOLUNTARY MEASURES. COORDINATE ALL REQUIREMENTS WITH GENERAL CONTRACTOR.
2. COMPLY WITH ALL PROVISIONS OF SECTION 5.408 - CONSTRUCTION WASTE REDUCTION DISPOSAL AND RECYCLING. SEE ARCHITECTURAL PLANS AND SPECIFICATION FOR REQUIREMENTS. COORDINATED ALL REQUIREMENTS WITH GENERAL CONTRACTOR.
3. PROVIDE TESTING AND ADJUSTING FOR SYSTEMS IN ADDITIONS, ALTERATIONS AND BUILDINGS UNDER 10,000 SQUARE FEET. SECTION 5.410.4
4. PROVIDE OPERATION AND MAINTENANCE MANUALS PER MECHANICAL SPECIFICATIONS AND CGBC SECTION 5.410.4.5.
5. TEMPORARY OPERATION OF THE PERMANENT HVAC SYSTEM FOR CONDITIONING OR VENTILATION OF THE SPACE SHALL BE IN ACCORDANCE WITH CGBC SECTION 5.504.1.3.
6. ALL DUCTWORK, EQUIPMENT AND RELATED MECHANICAL COMPONENTS SHALL BE COVERED WITH PLASTIC AND TAPE, OR SHEET METAL DURING STORAGE AT THE CONSTRUCTION SITE,DURING ROUGH INSTALLATION, AND UP UNTIL STARTUP TO PREVENT DEBRIS OR DUST FROM ENTERING DUCTWORK. CGBC SECTION 5.504.3
7. ALL FINISH MATERIALS INCLUDING ADHESIVES, SEALANTS, CAULKS, PAINTS, AND COATINGS SHALL COMPLY WITH CGBC SECTION 5.504.4.
8. OUTSIDE AIR TO BE PROVIDED IN ACCORDANCE WITH THE CALIFORNIA ENERGY CODE, LOCAL CODES, AND DIVISION 1, CHAPTER 4 OF CCR, TITLE 8. SEE ENERGY REPORTS, VENTILATION NOTES AND SCHEDULE. CGBC SECTION 5.506.1
9. PROVIDE MINIMUM LEVEL MERV-8 EFFICIENCY FILTERS FOR RETURN AND OUTSIDE AIR. CGBC SECTION 504.5.3
10. FOR BUILDINGS OR ADDITIONS WITH DEMAND CONTROL VENTILATION CARBON DIOXIDE MONITORS SHALL BE IN ACCORDANCE WITH THE CALIFORNIA ENERGY CODE. CGBC SECTION 5.506.2.
11. HVAC AND FIRE SUPPRESSION SYSTEMS SHALL NOT USE CHLOROFLUOROCARBONS (CFC) OR HALON REFRIGERANTS. CGBC SECTION 5.508.1
12. HVAC SYSTEM INSTALLERS SHALL BE TRAINED AND CERTIFIED IN THE PROPER INSTALLTION OF HVAC SYSTEMS. CGBC SECTION 702.1
13. WHEN REQUIRED BY THE ENFORCING AGENCY THE OWNER OR OWNERS AGENT SHALL EMPLOYEE SPECIAL INSPECTORS TO PROVIDE INSPECTION OR OTHER DUTIES TO SUBSTANTIATE COMPLIANCE WITH THE CGBC. CGBC SECTION 702.2

MECHANICAL DRAWING LIST

Sheet Number	Sheet Name
M-001	MECHANICAL SCHEDULES & NOTES
M-121	MECHANICAL PLAN - PHASE 1
M-122	MECHANICAL PLAN - PHASE 2
M-301	MECHANICAL SECTIONS
M-401	MECHANICAL ENLARGED PLAN - PHASE 1
M-402	MECHANICAL ENLARGED PLAN - PHASE 2
M-501	MECHANICAL DETAILS
M-502	MECHANICAL DETAILS
M-503	MECHANICAL DETAILS
M-601	MECHANICAL VRF SYSTEM
M-602	MECHANICAL CONTROLS

AGENCY APPROVAL STAMP:

IDENTIFICATION STAMP
DIV. OF THE STATE ARCHITECT
APP: 01-120890 INC:
REVIEWED FOR
SS ☑ FLS ☑ ACS ☑
DATE: 10/25/2023

TLCDARCHITECTURE
520 Third St. #250
Santa Rosa, CA 95401
o: 707.525.5600
f: 707.525.5616
tlcd.com

CONSULTANT:

TEP ENGINEERING
880 Second Street
Santa Rosa, CA 95404-4610
707.538.0400 office
707.538.0406 fax

STAMP:

REGISTERED PROFESSIONAL ENGINEER
TIM D SOUZA
M29511
Exp.Date 6-30-25
MECHANICAL
STATE OF CALIFORNIA

REVISIONS:

Number	Date	Description

NAPA VALLEY COLLEGE WINE EDUCATION CENTER

2277 NAPA VALLEJO HWY
NAPA, CA 94558

NAPA VALLEY COLLEGE

DSA APPLICATION NUMBER

TEP PROJECT NUMBER:
TEP #3650

DATE:
10/11/2023

© THESE DRAWINGS ARE INSTRUMENTS OF SERVICE AND ARE THE SOLE PROPERTY OF TLCD ARCHITECTURE. ANY USE WITHOUT WRITTEN CONSENT IS PROHIBITED.

MECHANICAL SCHEDULES & NOTES

M-001

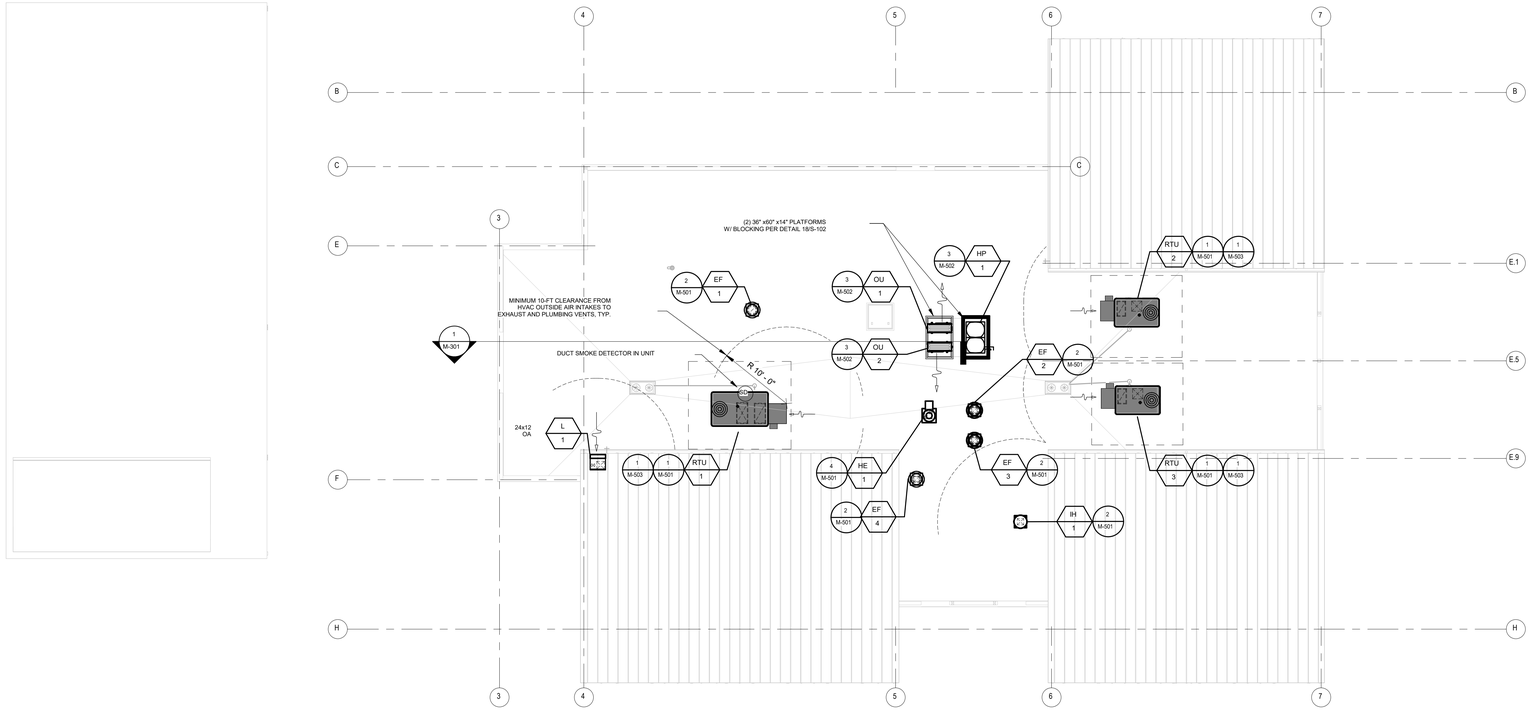

2 MECHANICAL ROOF PLAN - PHASE 1

1/8" = 1'-0"

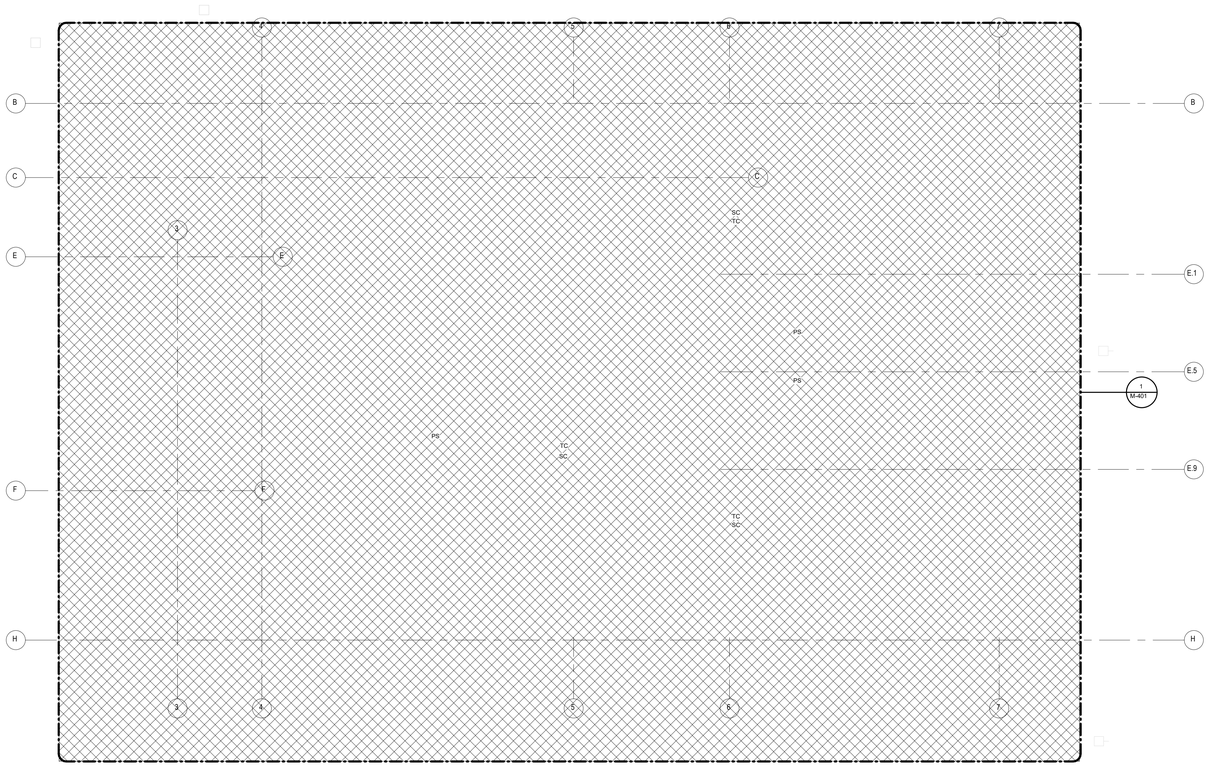

1 MECHANICAL PLAN - PHASE 1

1/8" = 1'-0"

GENERAL NOTES

1. PROVIDE TAP-IN DUCT BRANCH CONNECTIONS PER DETAIL:
2. PROVIDE ACOUSTICAL DUCT AND PIPE TREATMENTS AT ALL WALL AND FLOOR PENETRATIONS PER DETAIL:
3. PROVIDE DUCT AND PIPE SUPPORTS PER DETAILS:

AGENCY APPROVAL STAMP:

IDENTIFICATION STAMP
DIV. OF THE STATE ARCHITECT
APP: 01-120890 INC:
REVIEWED FOR
SS ☑ FLS ☑ ACS ☑
DATE: 10/25/2023

TLCDARCHITECTURE
520 Third St. #250
Santa Rosa, CA 95401
o: 707.525.5600
f: 707.525.5616
tlcd.com

CONSULTANT:
TEP ENGINEERING
880 Second Street
Santa Rosa, CA 95404-4610
707.538.0400 office
707.538.0406 fax

STAMP:

REGISTERED PROFESSIONAL ENGINEER
M29511
Exp.Date 6-30-25
MECHANICAL
STATE OF CALIFORNIA

REVISIONS:

Number	Date	Description

NAPA VALLEY COLLEGE WINE EDUCATION CENTER

2277 NAPA VALLEJO HWY
NAPA, CA 94558

NAPA VALLEY COLLEGE
DSA APPLICATION NUMBER:

TEP PROJECT NUMBER:
TEP 83650

DATE:
10/11/2023

KEYPLAN

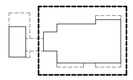

MECHANICAL PLAN - PHASE 1

M-121

© THESE DRAWINGS ARE INSTRUMENTS OF SERVICE AND ARE THE SOLE PROPERTY OF TLCD ARCHITECTURE. ANY USE OR PUBLICATION WITHOUT WRITTEN CONSENT IS PROHIBITED.

10/9/2023 9:51:01 PM

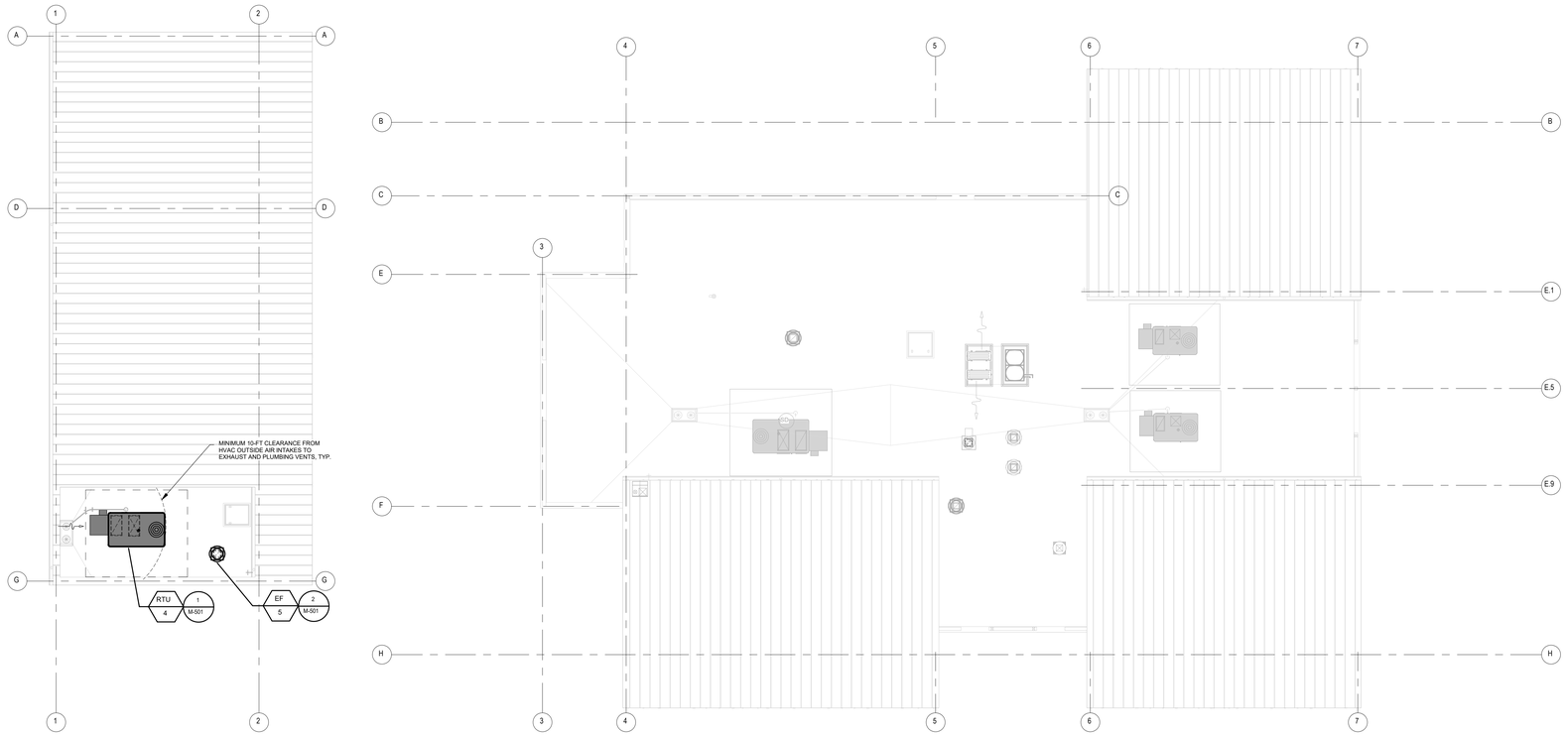

2 MECHANICAL ROOF PLAN - PHASE 2

1/8" = 1'-0"

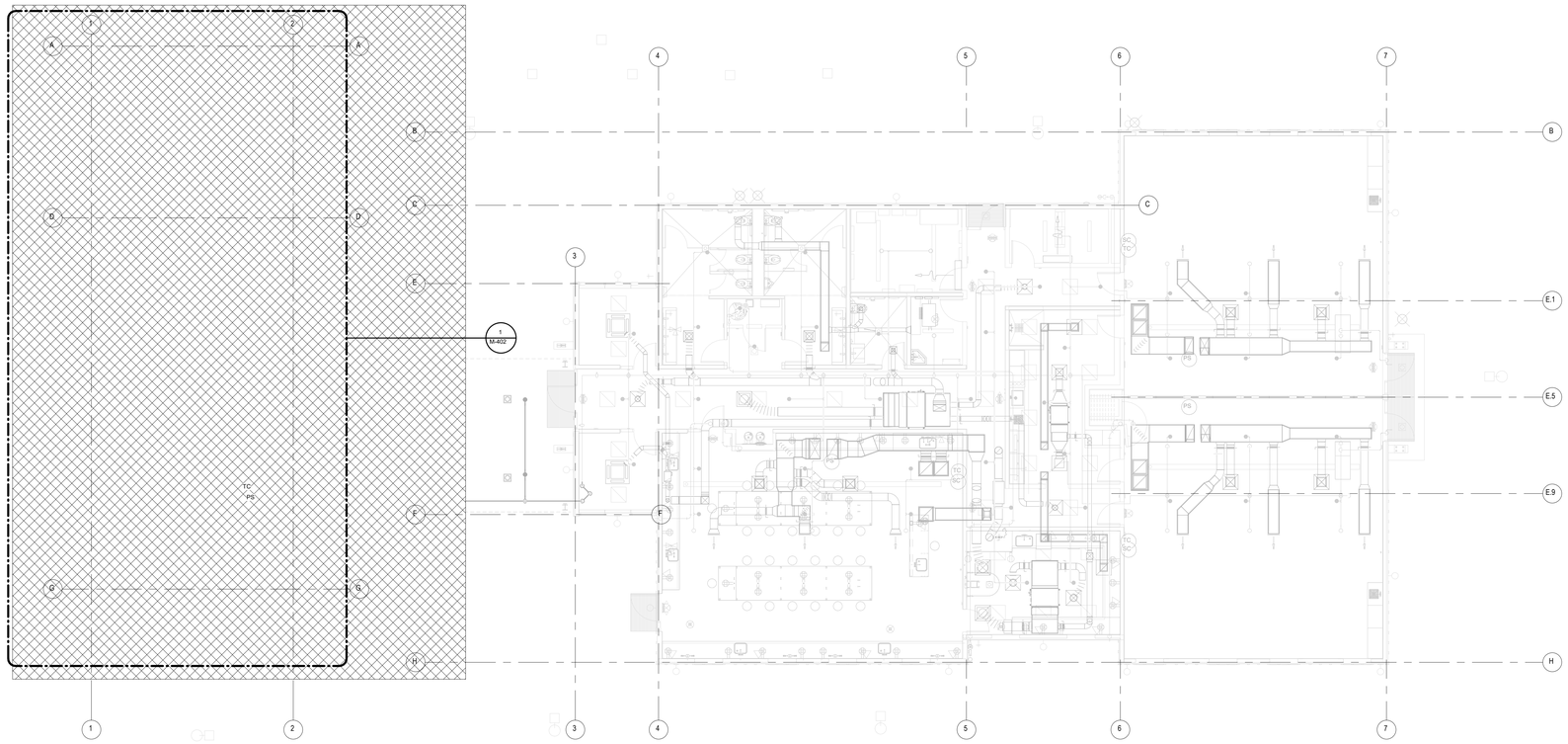

1 MECHANICAL PLAN - PHASE 2

1/8" = 1'-0"

GENERAL NOTES

1. PROVIDE TAP-IN DUCT BRANCH CONNECTIONS PER DETAIL:
2. PROVIDE ACOUSTICAL DUCT AND PIPE TREATMENTS AT ALL WALL AND FLOOR PENETRATIONS PER DETAIL:
3. PROVIDE DUCT AND PIPE SUPPORTS PER DETAILS:

5 M-501
6 M-501
7 M-501 8 M-501 2 M-502

KEYPLAN

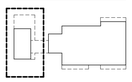

AGENCY APPROVAL STAMP:

IDENTIFICATION STAMP
DIV. OF THE STATE ARCHITECT
APP: 01-120890 INC:
REVIEWED FOR
SS ☑ FLS ☑ ACS ☑
DATE: 10/25/2023

TLCDARCHITECTURE
520 Third St. #250
Santa Rosa, CA 95401
o: 707.525.5600
f: 707.525.5616
tlcd.com

CONSULTANT:
TEP ENGINEERING
880 Second Street
Santa Rosa, CA 95404-4610
707.538.0400 office
707.538.0406 fax

STAMP:

REGISTERED PROFESSIONAL ENGINEER
TIM O SOUZA
M29511
Exp.Date 6-30-25
MECHANICAL
STATE OF CALIFORNIA

REVISIONS:

Number	Date	Description

NAPA VALLEY COLLEGE WINE EDUCATION CENTER

2277 NAPA VALLEJO HWY
NAPA, CA 94558

NAPA VALLEY COLLEGE
DSA APPLICATION NUMBER

TEP PROJECT NUMBER:
TEP #3650

DATE:
10/11/2023

MECHANICAL PLAN - PHASE 2

M-122

10/9/2023 9:51:03 PM

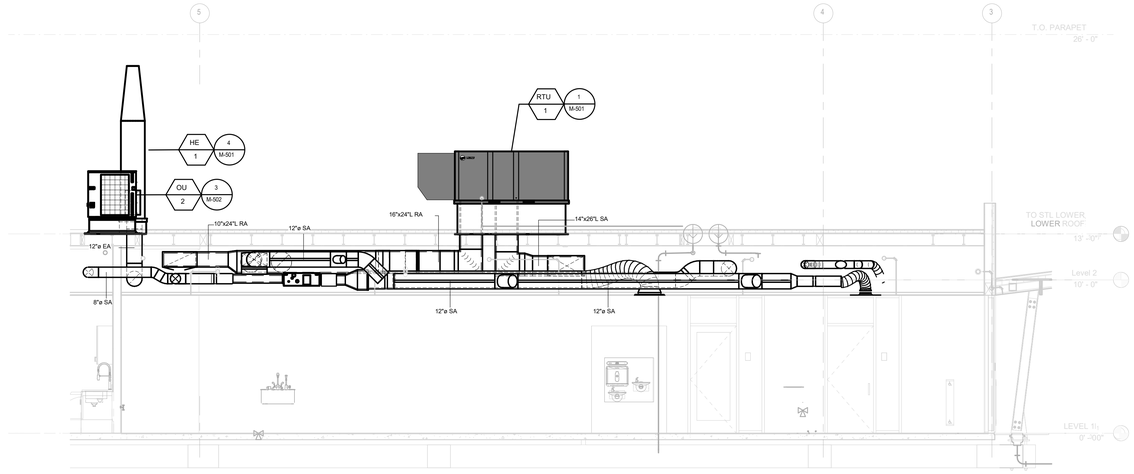

1 MECHANICAL SECTION AT HALL

1/4" = 1'-0"

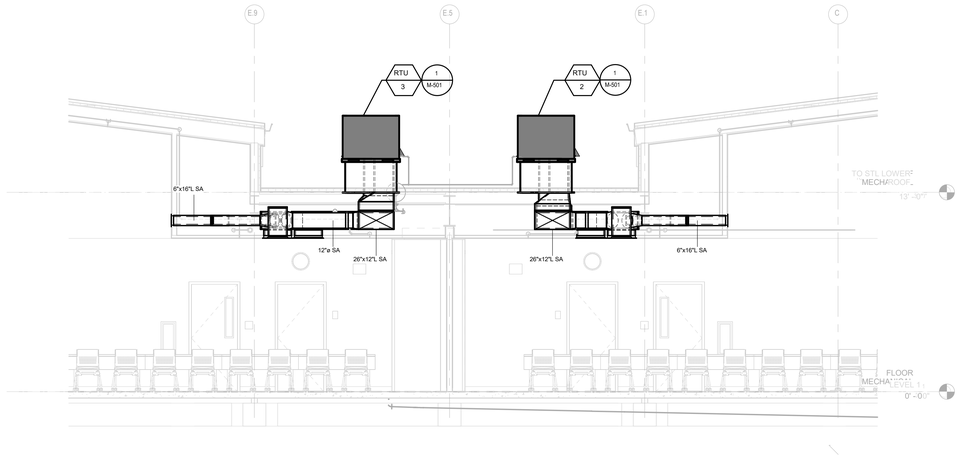

2 MECHANICAL SECTION AT SENSORY CLASSROOMS

1/4" = 1'-0"

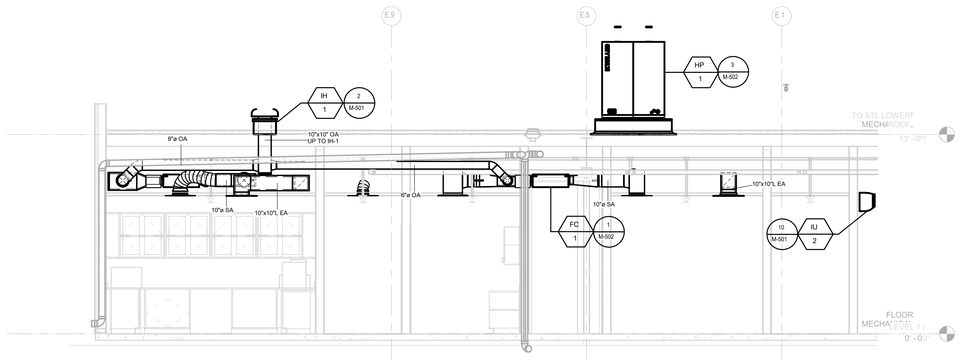

3 MECHANICAL SECTION AT WINE LAB

1/4" = 1'-0"

GENERAL NOTES

1. **PROVIDE TAP-IN DUCT BRANCH CONNECTIONS PER DETAIL:**
2. **PROVIDE ACOUSTICAL DUCT AND PIPE TREATMENTS AT ALL WALL AND FLOOR PENETRATIONS PER DETAIL:**
3. **PROVIDE DUCT AND PIPE SUPPORTS PER DETAILS:**

5 M-501 | 6 M-501 | 7 M-501 | 8 M-501 | 2 M-502

AGENCY APPROVAL STAMP:

IDENTIFICATION STAMP
DIV. OF THE STATE ARCHITECT
APP: 01-120890 INC:
REVIEWED FOR
SS ☑ FLS ☑ ACS ☑
DATE: 10/25/2023

TLCDARCHITECTURE
520 Third St. #250
Santa Rosa, CA 95401
o: 707.525.5600
f: 707.525.5616
tlcd.com

CONSULTANT:
TEP ENGINEERING
880 Second Street
Santa Rosa, CA 95404-4610
707.538.0400 office
707.538.0406 fax

STAMP:

REGISTERED PROFESSIONAL ENGINEER
M29511
Exp.Date 6-30-25
MECHANICAL
STATE OF CALIFORNIA

REVISIONS:

Number	Date	Description

NAPA VALLEY COLLEGE WINE EDUCATION CENTER

2277 NAPA VALLEJO HWY
NAPA, CA 94558

NAPA VALLEY COLLEGE
DSA APPLICATION NUMBER:

TEP PROJECT NUMBER:
TEP 83650

DATE:
10/11/2023

MECHANICAL SECTIONS

M-301

© THESE DRAWINGS ARE INSTRUMENTS OF SERVICE AND ARE THE SOLE PROPERTY OF TLCD ARCHITECTURE. ANY USE WITHOUT WRITTEN CONSENT IS PROHIBITED.

10/9/2023 9:51:06 PM

GENERAL NOTES

1. PROVIDE TAP-IN DUCT BRANCH CONNECTIONS PER DETAIL:
2. PROVIDE ACOUSTICAL DUCT AND PIPE TREATMENTS AT ALL WALL AND FLOOR PENETRATIONS PER DETAIL:
3. PROVIDE DUCT AND PIPE SUPPORTS PER DETAILS:

WALL TYPE LEGEND

1 HR RATED WALL

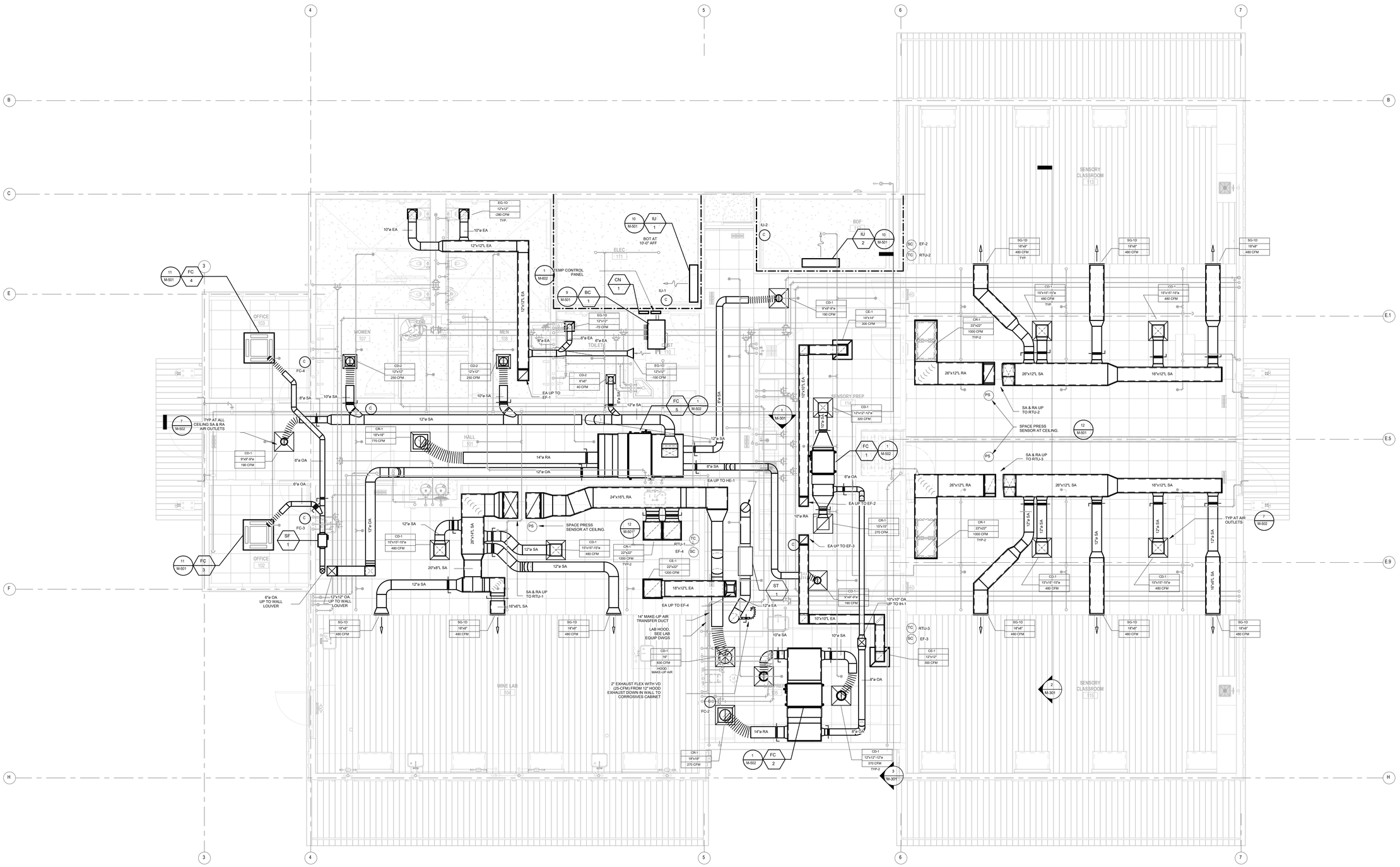

1 MECHANICAL PLAN - ENLARGED PHASE 1

1/4" = 1'-0"

KEYPLAN

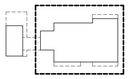

AGENCY APPROVAL STAMP:

IDENTIFICATION STAMP
DIV. OF THE STATE ARCHITECT
APP: 01-120890 INC:
REVIEWED FOR
SS ☑ FLS ☑ ACS ☑
DATE: 10/25/2023

TLCDARCHITECTURE
520 Third St. #250
Santa Rosa, CA 95401
o: 707.525.5600
f: 707.525.5616
tlcd.com

CONSULTANT:
TEP ENGINEERING
880 Second Street
Santa Rosa, CA 95404-4610
707.538.0400 office
707.538.0406 fax

STAMP:

REGISTERED PROFESSIONAL ENGINEER
M29511
Exp.Date 6-30-25
MECHANICAL
STATE OF CALIFORNIA

REVISIONS:

Number	Date	Description

NAPA VALLEY COLLEGE WINE EDUCATION CENTER

2277 NAPA VALLEJO HWY
NAPA, CA 94558

NAPA VALLEY COLLEGE
DSA APPLICATION NUMBER

TEP PROJECT NUMBER:
TEP #3650

DATE:
10/11/2023

MECHANICAL ENLARGED PLAN - PHASE 1

M-401

© THESE DRAWINGS ARE INSTRUMENTS OF SERVICE AND ARE THE SOLE PROPERTY OF TLCD ARCHITECTURE. ANY USE WITHOUT WRITTEN CONSENT IS PROHIBITED.

10/9/2023 9:51:08 PM

GENERAL NOTES

1. PROVIDE TAP-IN DUCT BRANCH CONNECTIONS PER DETAIL:
2. PROVIDE ACOUSTICAL DUCT AND PIPE TREATMENTS AT ALL WALL AND FLOOR PENETRATIONS PER DETAIL:
3. PROVIDE DUCT AND PIPE SUPPORTS PER DETAILS:

5 M-501
6 M-501
7 M-501 8 M-501 2 M-502

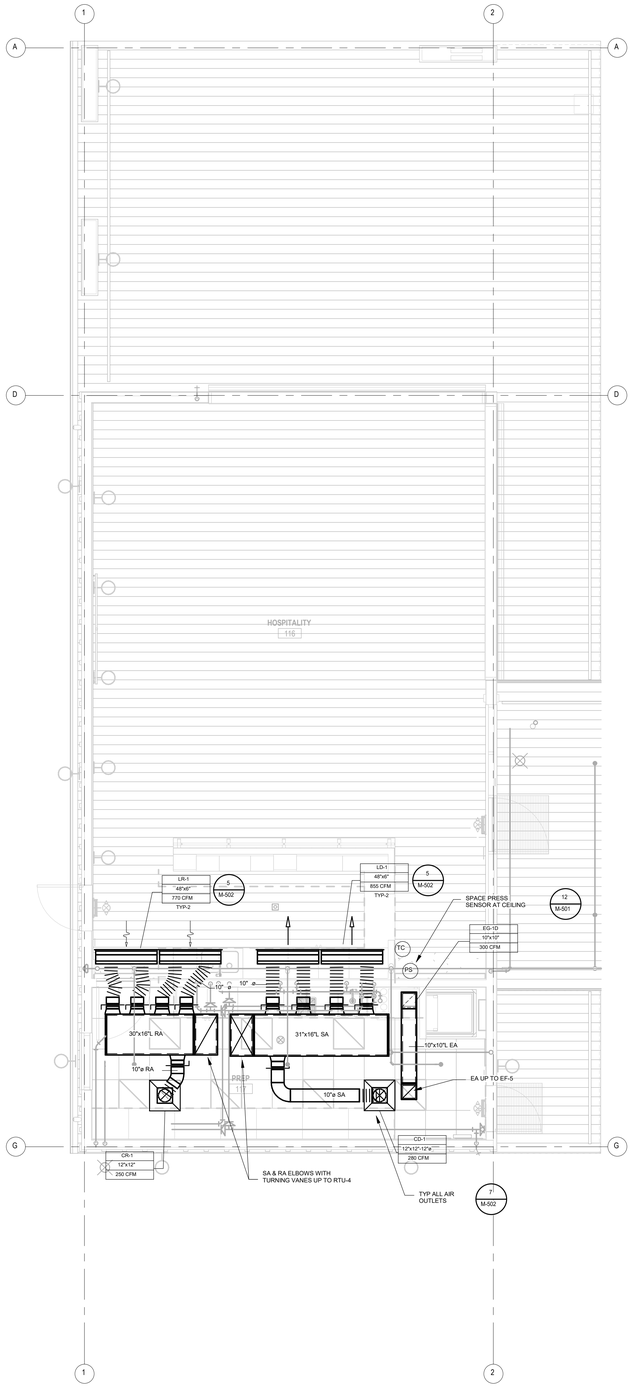

1 **MECHANICAL PLAN - ENLARGED PHASE 2**

1/4" = 1'-0"

KEYPLAN

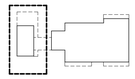

AGENCY APPROVAL STAMP:

IDENTIFICATION STAMP
DIV. OF THE STATE ARCHITECT
APP: 01-120890 INC:
REVIEWED FOR
SS ☑ FLS ☑ ACS ☑
DATE: 10/25/2023

TLCDARCHITECTURE
520 Third St. #250
Santa Rosa, CA 95401
o: 707.525.5600
f: 707.525.5616
tlcd.com

CONSULTANT:
TEP ENGINEERING
880 Second Street
Santa Rosa, CA 95404-4610
707.538.0400 office
707.538.0406 fax

STAMP:

REGISTERED PROFESSIONAL ENGINEER
TIM D. SOOZA
M29511
Exp.Date 6-30-25
MECHANICAL
STATE OF CALIFORNIA

REVISIONS:

Number	Date	Description

NAPA VALLEY COLLEGE WINE EDUCATION CENTER

2277 NAPA VALLEJO HWY
NAPA, CA 94558

NAPA VALLEY COLLEGE
DSA APPLICATION NUMBER

TEP PROJECT NUMBER
TEP #3650

DATE
10/11/2023

MECHANICAL ENLARGED PLAN - PHASE 2

M-402

10/9/2023 9:51:09 PM

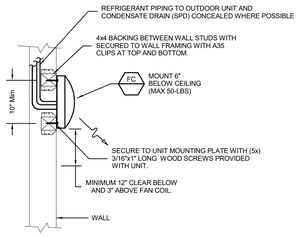

10 WALL MOUNTED FAN COIL

NOT TO SCALE

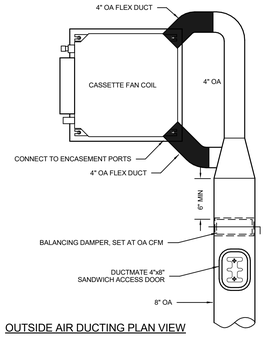

OUTSIDE AIR DUCTING PLAN VIEW

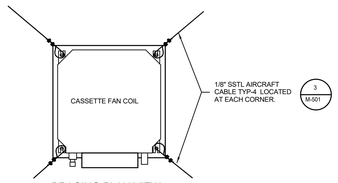

BRACING PLAN VIEW

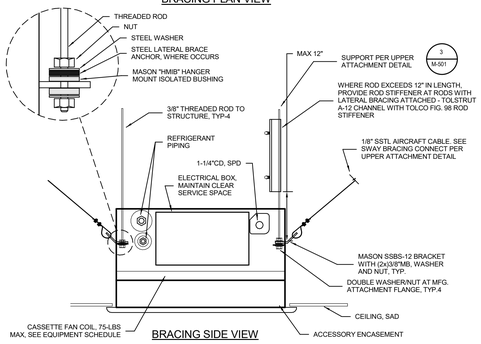

BRACING SIDE VIEW

11 CEIILING MOUNTED DUCTLESS FAN COIL

NOT TO SCALE

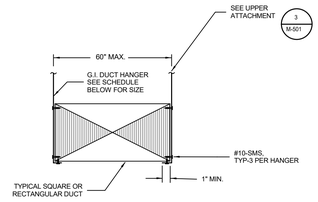

DUCT HANGER STRAP SCHEDULE						
HALF DUCT PERIMETER	DUCT MATERIAL	DUCT GAUGE	WEIGHT LB/FT	SUPPORT SPACING	WEIGHT PER HANGER	STRAP SIZE
UP TO P/2 = 56"	GALVANIZED SHEET METAL	24	13 *	5'-0" O.C.	65 LBS	1" x 18 GA
* WEIGHT INCLUDES 1-1/2" 0.75-PCF INSULATION.						

NOTES:

1. ALL DUCTWORK LARGER THAN 6 SQ.FT. FACE AREA OR WEIGHING MORE THAN 20-LBS PER FOOT SHALL BE SEISMICALLY BRACED IN ACCORDANCE WITH MASON OPM# 0043-13 PAGE D4.10 SEE DETAIL: 8 M-502
2. INSTALL FLEXIBLE CONNECTORS AT CONNECTIONS TO ALL COMPONENTS THAT WEIGH MORE THAN 75-LBS.
3. DUCTWORK SHALL BE SUPPORTED SUCH THAT IT CANNOT COME INTO CONTACT WITH OTHER DUCTS OR MECHANICAL COMPONENTS. IF CONTACT WITH OTHER DUCTS OR MECHANICAL COMPONENTS CANNOT BE PREVENTED, DUCT RUN SHALL BE SEISMICALLY BRACED IN ACCORDANCE WITH MASON OPM# 0043-13.

7 RECTANGULAR DUCT SUPPORTS

NOT TO SCALE

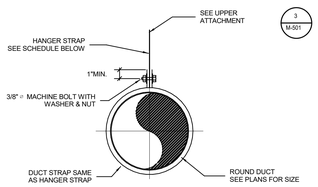

DUCT HANGER STRAP SCHEDULE						
DUCT SIZE	DUCT MATERIAL	DUCT GAUGE	WEIGHT LB/FT	SUPPORT SPACING	WEIGHT PER HANGER	STRAP SIZE
UP THRU 10"	GALVANIZED SHEET METAL	24	4.1 *	10'-0" O.C.	41 LBS	1" x 18 GA
11" TO 18"	GALVANIZED SHEET METAL	24	7.1 *	10'-0" O.C.	71 LBS	1" x 18 GA
* WEIGHT INCLUDES 1-1/2" 0.75-PCF INSULATION.						

NOTES:

1. ALL DUCTWORK LARGER THAN 28" DIAMETER OR WEIGHING MORE THAN 20-LBS PER FOOT SHALL BE SEISMICALLY BRACED IN ACCORDANCE WITH MASON OPM# 0043-13, PAGE D2.10 SEE DETAIL: 8 M-502
2. INSTALL FLEXIBLE CONNECTORS AT CONNECTIONS TO ALL COMPONENTS THAT WEIGH MORE THAN 75-LBS.
3. DUCTWORK SHALL BE SUPPORTED SUCH THAT IT CANNOT COME INTO CONTACT WITH OTHER DUCTS OR MECHANICAL COMPONENTS. IF CONTACT WITH OTHER DUCTS OR MECHANICAL COMPONENTS CANNOT BE PREVENTED, DUCT RUN SHALL BE SEISMICALLY BRACED IN ACCORDANCE WITH MASON OPM# 0043-13.
4. SUPPORT FLEXIBLE DUCTWORK WITH 1-1/2" GSM (24-GA) STRAPS AT 48" O.C. MAX (MAXIMUM FLEXIBLE DUCT LENGTH TO BE 5-FT).

8 ROUND DUCT SUPPORTS

NOT TO SCALE

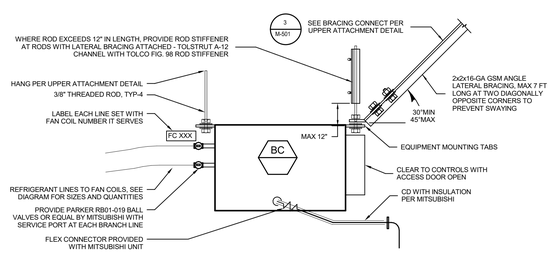

9 BC CONTROLLER

NOT TO SCALE

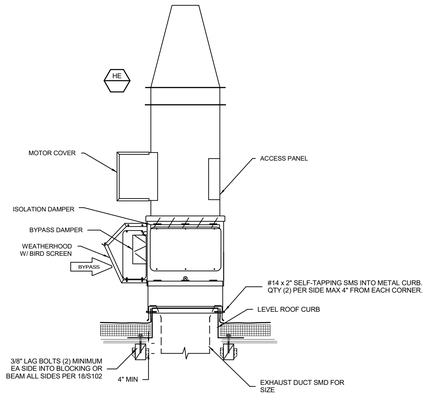

4 ROOF MOUNTED FUME EXHAUST FAN

NOT TO SCALE

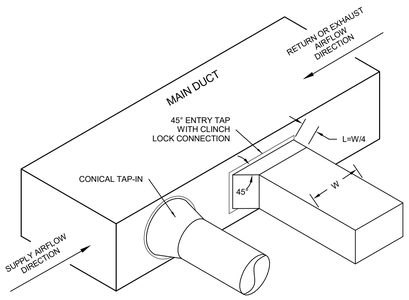

5 DUCT BRANCH CONNECTIONS

NOT TO SCALE

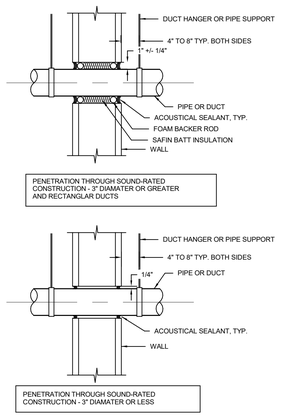

6 ACOUSTICAL DUCT TREATMENTS

NOT TO SCALE

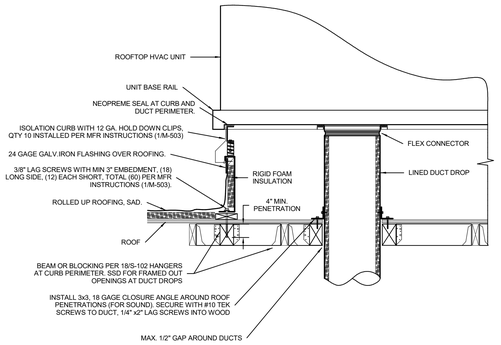

1 ROOFTOP HVAC UNIT ON ISOLATORS

NOT TO SCALE

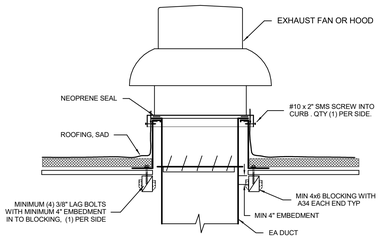

2 ROOF MOUNTED EXHAUST FAN

NOT TO SCALE

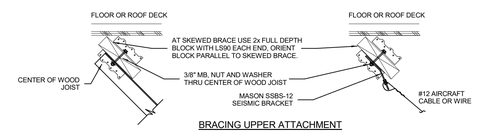

BRACING UPPER ATTACHMENT

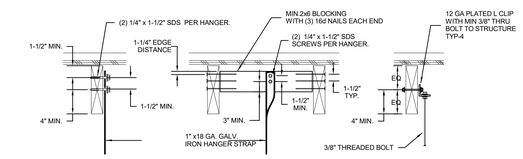

DUCT STRAP AT JOIST | DUCT STRAP BETWEEN JOISTS | HANGER ROD AT JOIST

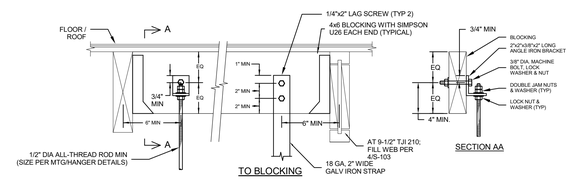

3 UPPER ATTACHMENT AT WOOD

NOT TO SCALE

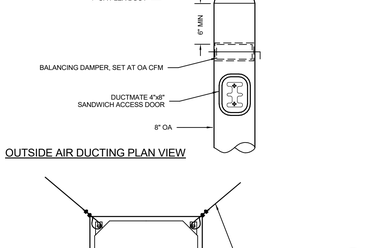

NOTES: INSTALL PER MANUFACTURER'S INSTRUCTIONS.

12 POWER EXHAUST PRESSURE SENSOR

NOT TO SCALE

AGENCY APPROVAL STAMP:

IDENTIFICATION STAMP
DIV. OF THE STATE ARCHITECT
APP: 01-120890 INC:
REVIEWED FOR
SS ☑ FLS ☑ ACS ☑
DATE: 10/25/2023

TLCDARCHITECTURE
520 Third St. #250
Santa Rosa, CA 95401
o: 707.525.5600
f: 707.525.5616
tlcd.com

CONSULTANT:
TEP ENGINEERING
880 Second Street
Santa Rosa, CA 95404-4610
707.538.0400 office
707.538.0406 fax

STAMP:

REGISTERED PROFESSIONAL ENGINEER
M29511
Exp.Date 6-30-25
MECHANICAL
STATE OF CALIFORNIA

REVISIONS:

Number	Date	Description

NAPA VALLEY COLLEGE WINE EDUCATION CENTER

2277 NAPA VALLEJO HWY
NAPA, CA 94558

NAPA VALLEY COLLEGE
DSA APPLICATION NUMBER:

TEP PROJECT NUMBER:
TEP #3650

DATE:
10/11/2023

MECHANICAL DETAILS

M-501

10/9/2023 5:11:10 PM

© THESE DRAWINGS AND INSTRUMENTS OF SERVICE ARE ON THE SOLE PROPERTY OF TLCD ARCHITECTURE. ANY USE WITHOUT WRITTEN CONSENT IS PROHIBITED.

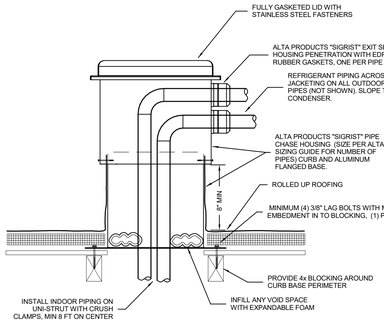

6 REFRIGERANT PIPING THRU ROOF

NOT TO SCALE

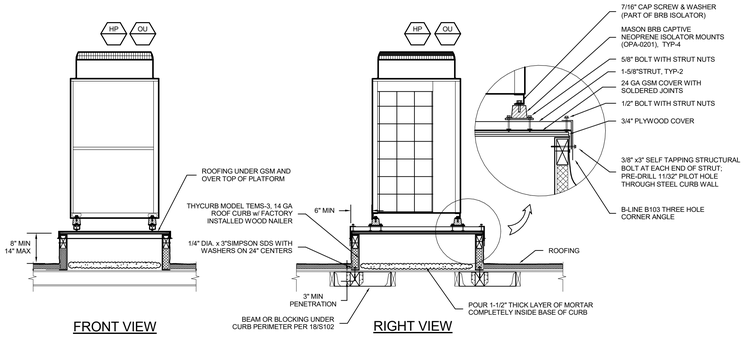

3 ROOF MOUNTED HP OUTDOOR UNIT

NOT TO SCALE

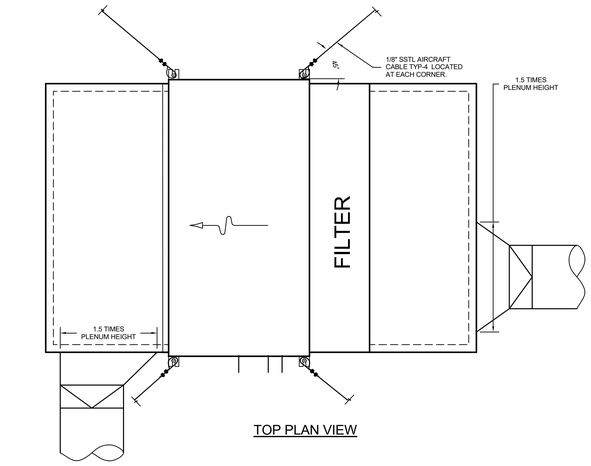

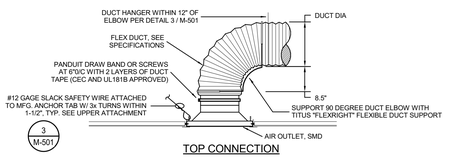

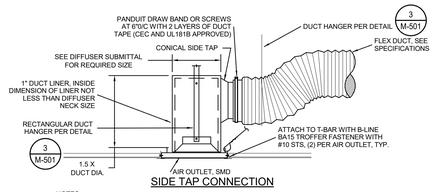

NOTES:

A. MAXIMUM ALLOWABLE DUCT SIZE FOR TOP CONNECTION METHOD IS 16" ROUND.
B. PROVIDE SIDE TAP CONNECTION AT LOCATIONS WHERE CLEARANCE BETWEEN DIFFUSER AND BOTTOM OF STRUCTURE IS LESS THAN DUCT DIAMETER + 10".
C. ALL CEILING MOUNTED AIR TERMINALS WEIGH LESS THAN 20-LBS.

7 DIFFUSER CONNECTION

NOT TO SCALE

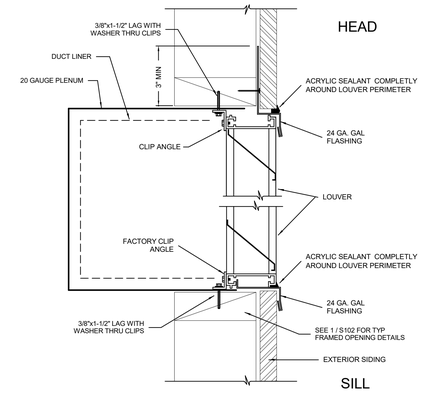

4 LOUVER AT WALL

NOT TO SCALE

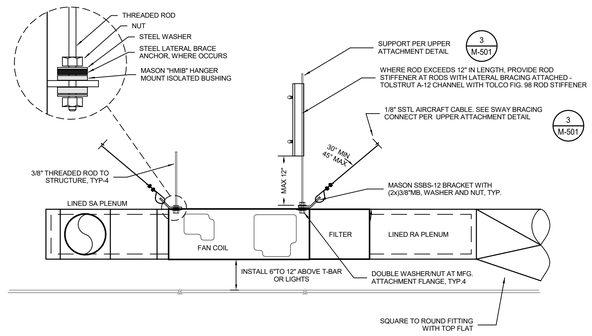

1 DUCTED FAN COIL

NOT TO SCALE

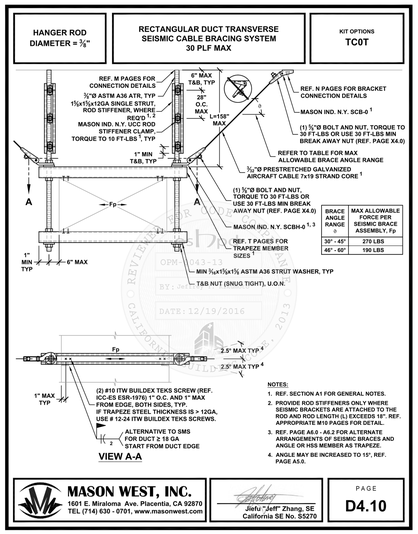

NOTES:

1. REF. SECTION A1 FOR GENERAL NOTES.
2. PROVIDE ROD STIFFENERS ONLY WHERE SEISMIC BRACES ARE ATTACHED TO THE ROD AND ROD LENGTH (L) EXCEEDS 18". REF. APPROPRIATE M10 PAGES FOR DETAIL.
3. REF. PAGE A6.0 - A6.2 FOR ALTERNATE ARRANGEMENTS OF SEISMIC BRACES AND ANGLE OR HSS MEMBER AS TRAPEZE.
4. ANGLE MAY BE INCREASED TO 15°, REF. PAGE A5.0.

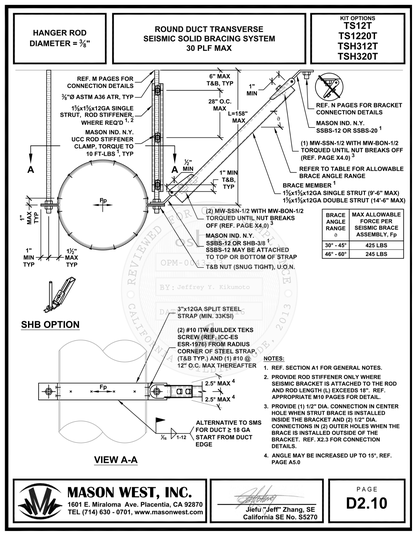

NOTES:

1. REF. SECTION A1 FOR GENERAL NOTES.
2. PROVIDE ROD STIFFENER ONLY WHERE SEISMIC BRACKET IS ATTACHED TO THE ROD AND ROD LENGTH (L) EXCEEDS 18". REF. APPROPRIATE M10 PAGES FOR DETAIL.
3. PROVIDE (1) 1/2" DIA. CONNECTION IN CENTER HOLE WHEN STRUT BRACE IS INSTALLED INSIDE THE BRACKET AND (2) 1/2" DIA CONNECTIONS IN (2) OUTER HOLES WHEN BRACE IS INSTALLED OUTSIDE OF THE BRACKET. REF. X2.3 FOR CONNECTION DETAILS.
4. ANGLE MAY BE INCREASED UP TO 15°, REF. PAGE A5.0

8 DUCT SEISMIC BRACING

NOT TO SCALE

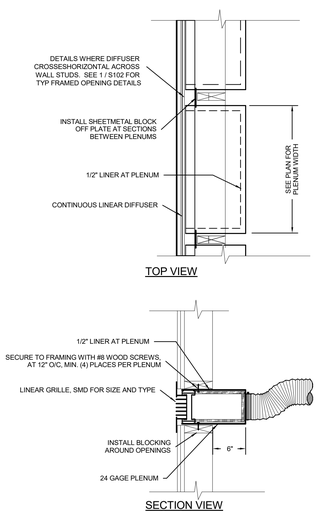

5 LINEAR BAR GRILLE AT WALL

NOT TO SCALE

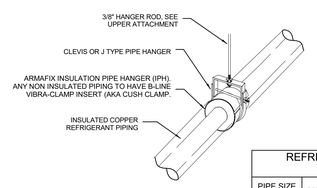

HANGER SUPPORT NOTES:

1. SELECT CLEVIS OR J-TYPE HANGER PIPE SIZE TO FIT OUTSIDE DIAMETER OF INSULATED PIPE HANGER SUPPORT.
2. ALL REFRIGERANT PIPING TO BE SUPPORTED WITHIN 12" OF STRUCTURE.
3. THIS DETAIL FOR PIPING THAT DOES NOT REQUIRE SEISMIC BRACING.
   - PIPING WITH AN Ip OF 1.0 THAT IS SUPPORTED WITHIN 12" OF STRUCTURE BY 3/8" OR 1/2" ROD, WITH LESS THAN 50-LBS PER HANGER DOES NOT REQUIRE SEISMIC BRACING.

REFRIGERATION PIPING HANGER ROD SCHEDULE (PER CMC TABLES 313.3 & 313.6)

PIPE SIZE	PIPE MATERIAL	ROD SIZE	HORIZONTAL SUPPORTS	WEIGHT LBFT	WEIGHT PER HANGER
1-1/2" AND SMALLER	COPPER	3/8"	6'-0" O.C.	0.9 *	5.4 LBS
* WEIGHT INCLUDES R410A REFRIGERANT, COPPER PIPING & INSULATION.					

CLEVIS HANGER SUPPORT

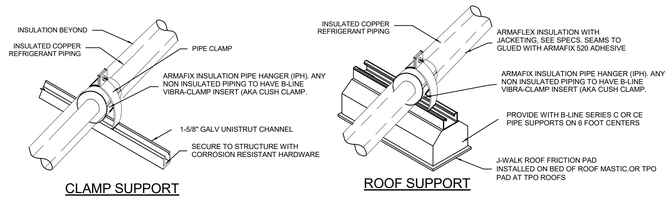

CLAMP SUPPORT

ROOF SUPPORTS

2 REFRIGERANT PIPING SUPPORTS

NOT TO SCALE

AGENCY APPROVAL STAMP:

IDENTIFICATION STAMP
DIV. OF THE STATE ARCHITECT
APP: 01-120890 INC:
REVIEWED FOR
SS ☑ FLS ☑ ACS ☑
DATE: 10/25/2023

TLCDARCHITECTURE
520 Third St. #250
Santa Rosa, CA 95401
o: 707.525.5600
f: 707.525.5616
tlcd.com

CONSULTANT:
TEP ENGINEERING
880 Second Street
Santa Rosa, CA 95404-4610
707.538.0400 office
707.538.0406 fax

STAMP:

REGISTERED PROFESSIONAL ENGINEER
Timothy S. Rodda
M29511
Exp.Date 6-30-25
MECHANICAL
STATE OF CALIFORNIA

REVISIONS:

Number	Date	Description

NAPA VALLEY COLLEGE WINE EDUCATION CENTER

2277 NAPA VALLEJO HWY
NAPA, CA 94558

NAPA VALLEY COLLEGE
2024 APPLICATION NUMBER

TEP PROJECT NUMBER:
TEP #3650

DATE:
10/11/2023

MECHANICAL DETAILS

M-502

10/9/2023 9:28:43 AM

© THESE DRAWINGS AND SPECIFICATIONS OF SERVICE ARE ARE THE SOLE PROPERTY OF TLCD ARCHITECTURE. ARE USE WITHOUT WRITTEN CONSENT IS PROHIBITED.

AGENCY APPROVAL STAMP:
IDENTIFICATION STAMP
DIV. OF THE STATE ARCHITECT
APP: 01-120890 INC:
REVIEWED FOR
SS ☑ FLS ☑ ACS ☑
DATE: 10/25/2023

CanFab — CANNON FABRICATION INC

182 GRANITE STREET, SUITE 101, CORONA, CA 92879
PHONE: (951)278–1830 FAX: (951)278–8444 www.canfab.com canfab@canfab.com

FOR: GROUP B ISO
TRANE PRECEDENT 4 - 10 TONS
THC 047E-72E, 048F-102F, TSC 072E-120E, 072F-120F, YHC 047E-72E, 048F-102F, YSC 048F-120F, 072E-120E, WSC 060E-90E, TZC 048E-60E, 048F-60F, YZC 048E-60E, 048F-60F, WHC 048-060H, 074-102H, WSC 060-072H, GWSC 060H, GERE 072-090

PART NO: 6042–IC

DIM A	DIM B	DIM C	DIM D	DIM E	DIM F	DIM G	DIM H
VARIES MAX 36" SEE TABLE 3	46.375"	80.5"	18.5"	8.625"	18.5"	34.375"	34.375"

NOTE: DIMENSIONS B & C ARE FROM I.D. OF CURB

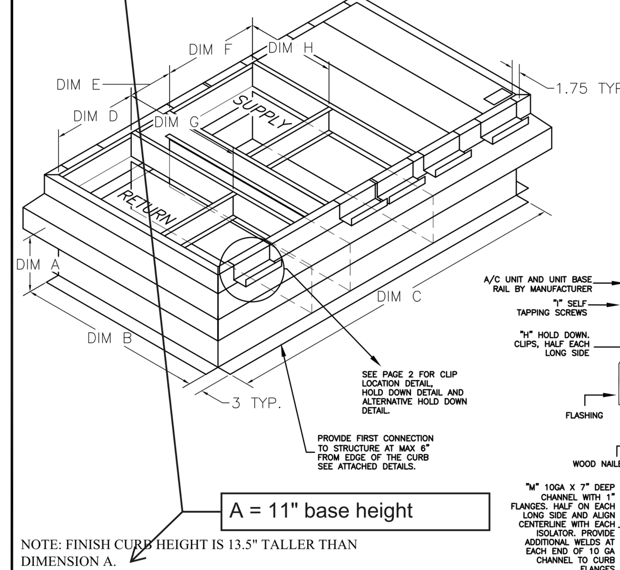

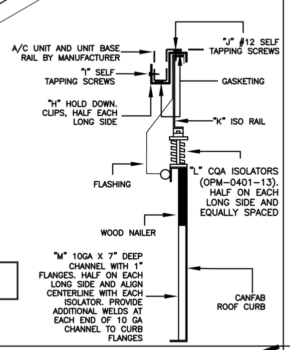

ALL WORK SHALL CONFORM TO THE STANDARD OF 2018 INTERNATIONAL BUILDING CODE & 2019 CALIFORNIA BUILDING CODE.

SEISMIC DESIGN CRITERIA
–SDS = 1.5 ap = 2.5
–I = 1.5 Rp = 2.0

WIND DESIGN CRITERIA
–MAX 60 FT TALL BUILDING
–EXPOSURE C
–175 MPH, 3 SECOND GUST WIND

NOTE:
INSTALLER TO VERIFY WITH A LICENSED STRUCTURAL ENGINEER IN THE CORRESPONDING STATE THE ADEQUACY OF THE STRUCTURE FOR LOADS IMPOSED BY THE UNIT AND THE CURB IN ADDITION TO ALL OTHER LOADS.
–INSTALLER TO VERIFY WITH A LICENSED STRUCTURAL ENGINEER IN THE CORRESPONDING STATE THAT THE SEISMIC AND WIND DESIGN CRITERIA NOTED ON THIS DRAWING ARE ADEQUATE FOR THE SITE SPECIFIC VALUES. OTHERWISE, CONTACT CANNON FABRICATION FOR A SITE SPECIFIC ANALYSIS AND DRAWINGS.

CURB CONSTRUCTION
1) ☒ WELDED
2) ☐ BOLTED
3) ☐ FINGERLOCK
–ALL WELDING CONSTRUCTION CERTIFIED TO ANSI/AWS D1.3 STRUCTURAL WELDING CODE–SHEET METAL
–SELF–DRILLING SCREW SHALL MEET ASTM C1513 SPECIFICATION AND INSTALLED PER AISI–S100
–NO GAP IS ALLOWED BETWEEN TWO METAL SHEET SURFACES WHERE SHEET METAL SCREW IS CONNECTED

CURB AND UNIT INFORMATION
"A" GAUGE GALVANIZED STEEL CURB 14 gauge
–SEE TABLE 3 FOR ALLOWABLE CURB AND UNIT DIMENSIONAL AND WEIGHT
–SEE TABLE 4 FOR TABULATED CURB AND ANCHORAGE INFORMATION PER VARYING CURB HEIGHT
– ALPHA DESIGNATIONS "A" THRU "M", CAN BE FOUND ON TABLE 4, PAGE 3

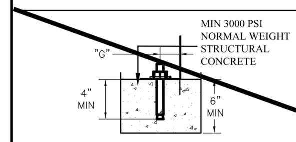

ATTACHMENT TO STRUCTURAL CONCRETE
"B" 5/8" HILTI KWIK BOLT TZ SS 304, HALF EACH LONG SIDE.
"C" 5/8" HILTI KWIK BOLT TZ SS 304, HALF EACH SHORT SIDE.
NOTE:
–MIN 5" AWAY FROM THE NEAREST CONCRETE EDGE (INSTALL PER ICC–ES ESR–1917).
–STRUCTURALLY ACCEPTABLE TO SUBSTITUTE HILTI KBTZ STAINLESS STEEL BOLTS WITH HILTI KBTZ CARBON STEEL BOLTS ONLY IF ALL THE BOLTS ARE COMPLETELY WATERPROOFED AND PROTECTED AGAINST THE WEATHER.
–BOLTS SHALL BE EQUALLY SPACED

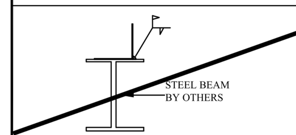

ATTACHMENT TO STRUCTURAL STEEL
1/8" FILLET WELD, 2" LONG, "D" ON CENTER
NOTE:
–PROVIDE MIN 2 CONNECTIONS WHERE THE CURB SIDE IS SHORTER THAN THE WELD SPACING.
–PROVIDE WELDS ON ALL SIDES

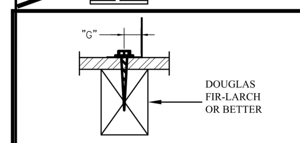

ATTACHMENT TO WOOD
"E" 3/8"x4" LAG SCREWS, HALF EACH LONG SIDE.
"F" 3/8"x4" LAG SCREWS, HALF EACH SHORT SIDE.
NOTE:
–SCREWS SHALL BE EQUALLY SPACED.

STRUCTURAL REVIEW BY:
MARTIN & associates — JOHN A. MARTIN AND ASSOCIATES, Structural Engineers, 950 South Grand Ave., 4th Floor, Los Angeles, California 90015, Phone (213) 483 6490, Fax (213) 483 3084, Job No.: 13001

REGISTERED PROFESSIONAL ENGINEER GREGORY LOUIS OROZCO No. 4957 STRUCTURAL STATE OF CALIFORNIA
12/7/2018

PROJECT: IBC 2018/ CBC 2019 UPDATE DATE: 11.30.18
ENGINEER: LD DISTRIBUTOR:
DRAWING NUMBER: GROUP_B_ISO.DWG PAGE 1 OF 3

CanFab — CANNON FABRICATION INC

182 GRANITE STREET, SUITE 101, CORONA, CA 92879
PHONE: (951)278–1830 FAX: (951)278–8444 www.canfab.com canfab@canfab.com

FOR: GROUP B ISO
PART NO: SEE BELOW

HOLD DOWN DETAIL

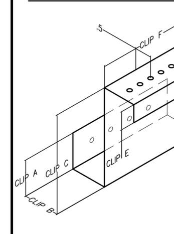

NOTE:
SEE TABLE 1 FOR DESIGNATED HOLD DOWN CLIP PER CURB

TABLE 1 HOLD DOWN CLIP PER CURB

CURB	CLIP	GAUGE	CLIP A [IN]	CLIP B [IN]	CLIP C [IN]	CLIP D [IN]	CLIP E [IN]	CLIP F [IN]
1008 1008–XIC	1909–SHD8–12	12 GA	1.5	2.625	4.5625	1.875	1.0	9.0
3012	3901–SHD8–12	12 GA	[illegible]	4.81	3.875	2.125	1.0	9.0
4028S	4901–SHD8–12	12 GA	2.0	3.0625	4.625	1.875	1.0	9.0
6042	6907–SHD8–12	12 GA	2.0	2.0	3.25	1.875	1.0	9.0
6042S	6907–SHD8–12	12 GA	2.0	2.0	3.25	1.875	1.0	9.0

STRUCTURAL REVIEW BY:
MARTIN & associates — JOHN A. MARTIN AND ASSOCIATES, Structural Engineers, 950 South Grand Ave., 4th Floor, Los Angeles, California 90015, Phone (213) 483 6490, Fax (213) 483 3084, Job No.: 13001

REGISTERED PROFESSIONAL ENGINEER GREGORY LOUIS OROZCO No. 4957 STRUCTURAL STATE OF CALIFORNIA
12/7/2018

ALTERNATIVE HOLD DOWN DETAIL

NOTE:
APPLICABLE ONLY FOR 9" LONG HOLD DOWN WITH (8) SCREWS AT TOP AND (4) SCREWS AT BOT EQUALLY SPACED

1. INFORMATION SHOWN ON THE STAMPED CANFAB CURB DRAWING IS THE MINIMUM REQUIREMENTS FOR THE CURB CONSTRUCTION AND INSTALLATION. NO STRUCTURAL OBJECTION TO THE USE OF LARGER SIZE SCREWS AND THICKER GAUGE SHEET METAL THAN THE INFORMATION SHOWN ON THE STAMPED CANFAB CURB DRAWING.
2. NO STRUCTURAL OBJECTION TO SHIFTING THE ATTACHMENT CLIPS ALONG THE CURB. FIRST AND LAST CLIP IN THE SERIES OF CLIPS SHALL BE LOCATED PER CLIP LOCATION DETAIL PER STAMPED CANFAB CURB DRAWING. DISTANCE SHIFTED SHALL NOT BE LARGER THAN THE LENGTH OF THE CLIP.
3. NO STRUCTURAL OBJECTION TO CUTTING THE ATTACHMENT CLIPS PER REQUIREMENTS AS SHOWN ON BELOW SKETCH.

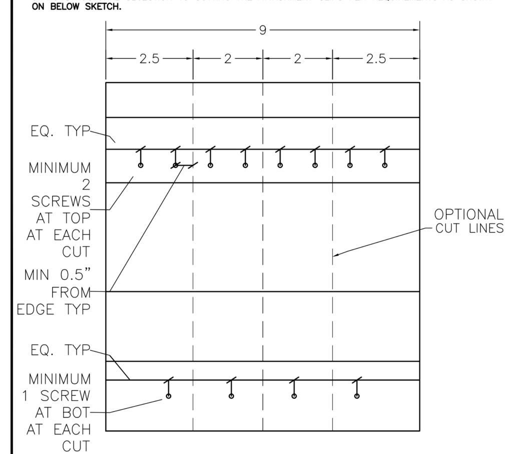

CLIP LOCATION DETAIL

NOTE:
SEE TABLE 2 FOR CLIP LOCATION

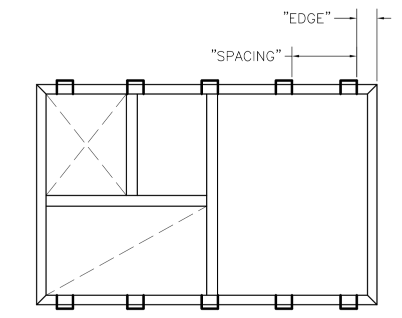

TABLE 2 CLIP LOCATION

CURB	EDGE [IN]	SPACING [IN]
1008, 1008–XIC	7.75	16.56
3012	7.75	13.09
4028S	7.75	25.76
6042	7.75	17.125
6042S	7.75	17.125

PROJECT: IBC 2018/ CBC 2019 UPDATE DATE: 11.30.18
ENGINEER: LD DISTRIBUTOR:
DRAWING NUMBER: GROUP_B_ISO.DWG PAGE 2 OF 3

CanFab — CANNON FABRICATION INC

182 GRANITE STREET, SUITE 101, CORONA, CA 92879
PHONE: (951)278–1830 FAX: (951)278–8444 www.canfab.com canfab@canfab.com

FOR: GROUP B ISO
PART NO: SEE BELOW

TABLE 3 ALLOWABLE CURB AND UNIT DIMENSION AND WEIGHT

RELATED CURBS	LCURB [IN]	WCURB [IN]	HCURB [IN]	WTCURB [LBS]	LUNIT [IN]	WUNIT [IN]	HUNIT [IN]	WTUNIT [LBS]	CG.LONG [IN]	CG.SHORT [IN]	CG.HEIGHT [IN]
1008 1008–XIC	SEE PAGE 1	SEE PAGE 1	MIN 8	MIN 405,408	88.125	59.5	47	MAX 2028 FOR 1008 MAX 2186 FOR 1008 XIC	53.875	9.125	23.75
			11	438, 441							
			14	474, 477							
			18	519, 522							
			24	662, 665							
			MAX 36	MAX 828,831							
3012	SEE PAGE 1	SEE PAGE 1	MIN 8	MIN 406	69	59	50.75	MAX 1589	49.75	35.5	HUNIT/2
			11	438							
			14	469							
			18	510							
			24	647							
			MAX 36	MAX 801							
4028S	SEE PAGE 1	SEE PAGE 1	MIN 8	MIN 327	98.25	47	46.875	MAX 1316	47	22	HUNIT/2
			11	359							
			14	391							
			18	433							
			24	574							
			MAX 36	MAX 733							
6042	SEE PAGE 1	SEE PAGE 1	MIN 8	MIN 442	88.625	53.25	46.875	MAX 1565	49	24	HUNIT/2
			11	474							
			14	505							
			18	547							
			24	687							
			MAX 36	MAX 845							
6042S	SEE PAGE 1	SEE PAGE 1	MIN 8	MIN 473	[illegible]	63.188	50.875	MAX 1916	54	27	HUNIT/2
			11	507							
			14	540							
			18	584							
			24	733							
			MAX 36	MAX 899							

STRUCTURAL REVIEW BY:
MARTIN & associates — JOHN A. MARTIN AND ASSOCIATES, Structural Engineers, 950 South Grand Ave., 4th Floor, Los Angeles, California 90015, Phone (213) 483 6490, Fax (213) 483 3084, Job No.: 13001

REGISTERED PROFESSIONAL ENGINEER GREGORY LOUIS OROZCO No. 4957 STRUCTURAL STATE OF CALIFORNIA
12/7/2018

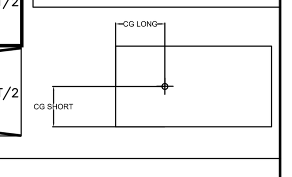

TABLE 4 TABULATED CURB AND ANCHORAGE INFORMATION PER VARYING HEIGHT

		0 < H ≤ 18"	18" < H ≤ 22"	22" < H ≤ 30"	30" < H ≤ 36"
A	CURB THICKNESS	14 GA	14 GA	12 GA	12 GA
B	EXP. ANCHOR	8	8	10	10
C	EXP. ANCHOR	6	6	8	8
D	WELD	18"	18"	18"	18"
E	SCREWS	36	38	38	40
F	SCREWS	24	24	24	24
G	DISTANCE	MAX 0.75"	MAX 0.75"	MAX 0.75"	MAX 0.75"
H	NO. OF CLIPS	10	10	10	10
I	CLIP SMS	(4) #14	(4) #14	(4) #14	(4) #14
J	CLIP SMS	(8) #14	(8) #14	(8) #14	(8) #14
K	ISO RAIL	10 GA 7.5" DEEP X 1" FLANGES			
L	NO. OF ISOLATORS	8 FOR 3012 AND 4028S, 10 FOR 1008, 6042 AND 6042S & 11 FOR 1008 XIC			
M	NO. OF STIFFENERS	8 FOR 3012 AND 4028S, 10 FOR 1008, 6042 AND 6042S & 11 FOR 1008 XIC			

PROJECT: IBC 2018/ CBC 2019 UPDATE DATE: 11.30.18
ENGINEER: LD DISTRIBUTOR:
DRAWING NUMBER: GROUP_B_ISO.DWG PAGE 3 OF 3

1 ISOLATION CURB - RTU-1, RTU-2, RTU-3

NOT TO SCALE

TLCDARCHITECTURE
520 Third St. #250
Santa Rosa, CA 95401
o: 707.525.5600
f: 707.525.5616
tlcd.com

CONSULTANT:
TEP ENGINEERING
880 Second Street
Santa Rosa, CA 95404-4610
707.538.0400 office
707.538.0406 fax

STAMP:
REGISTERED PROFESSIONAL ENGINEER TIM D SOUZA M29511 Exp.Date 6-30-25 MECHANICAL STATE OF CALIFORNIA

REVISIONS:

Number	Date	Description

NAPA VALLEY COLLEGE WINE EDUCATION CENTER

2277 NAPA VALLEJO HWY
NAPA, CA 94558

NAPA VALLEY COLLEGE
DSA APPLICATION NUMBER

TEP PROJECT NUMBER:
TEP #3650

DATE:
10/11/2023

MECHANICAL DETAILS

M-503

© THESE DRAWINGS ARE INSTRUMENTS OF SERVICE AND ARE THE SOLE PROPERTY OF TLCD ARCHITECTURE. ANY USE WITHOUT WRITTEN CONSENT IS PROHIBITED.

10/9/2023 9:51:11 PM

NAPA VALLEY COLLEGE WINE EDUCATION CENTER

DIAGRAM SYMBOL LEGEND	
DISPLAY	DESCRIPTION
—//—	POWER WIRE
———	CONTROL WIRE
— —	REF. PIPE

CONT.No		PAGE	

CITY MULTI

SYSTEM SCHEMATIC DWG.

PIPING AND CONTROLS	
SYMBOL BRANCH PIPE MODEL NAME	
J1	CMY-R301S-G
SYMBOL LIQUID PIPE/GAS PIPE SIZE	
P1	1/4 / 1/2
P2	3/8 / 5/8
P3	3/4 / 7/8
SYMBOL	MODEL NUMBER
MA	PAR-CT01MAU-SB

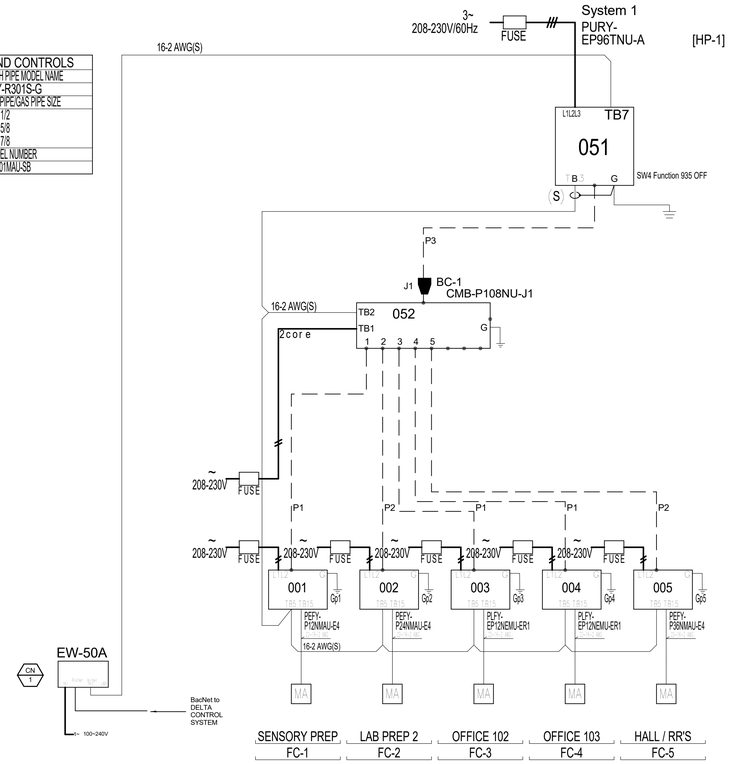

1 VRF SYSTEM DETAILS

NOT TO SCALE

VRF SYSTEM REQUIREMENTS and NOTES

(SEE SPECIFICATION SECTION 23 00 00 FOR ADDITIONAL REQUIREMENTS)

CONTRACTOR'S QUALIFICATIONS

THE MECHANICAL CONTRACTOR SHALL SHOW HAVING SUCCESSFULLY INSTALLED A MINIMUM OF TWO (2) VRF PROJECTS OF SIMILAR SIZE WITHIN THE PAST 5 YEARS. PROVIDE FOR APPROVAL, PRIOR TO CONSTRUCTION, A WRITTEN STATEMENT INDICATING THE PROJECT NAMES, DATES COMPLETED, OWNERS NAME AND CONTACT INFORMATION.

INSTALLER QUALIFICATIONS

INSTALLERS FOR THE MITSUBISHI CITY MULTI SYSTEM SHALL HAVE AT LEAST ONE PERSON FACTORY TRAINED AND CERTIFIED FOR INSTALLATION AND SERVICE OF THE DAIKIN VRF SYSTEM BY VRF MANUFACTURER. THIS PERSON SHALL AT ALL TIMES SUPERVISE THE INSTALLATION OF ALL OTHER INSTALLERS AND ASSURE ALL WORK IS DONE IN ACCORDANCE WITH MITSUBISHI REQUIREMENTS . ALL OTHER INSTALLERS SHALL BE TRAINED AND CERTIFIED IN HVAC INSTALLATION (INCLUDING BUT NOT LIMITED TO REFRIGERANT PIPING AND CONTROLS) BY A NATIONAL OR REGIONALLY RECOGNIZED ORGANIZATION. PROVIDE FOR APPROVAL, PRIOR TO CONSTRUCTION, COPIES OF INSTALLERS CERTIFIES OR OTHER PROOF OF QUALIFICATIONS.

PIPING

REFRIGERANT PIPING

A. INSTALL ALL PIPING IN ACCORDANCE WITH MANUFACTURER'S REQUIREMENTS AND THE REQUIREMENTS OF THIS SPECIFICATIONS.

B. SEAMLESS COPPER TUBING, ASTM B280, TYPE L - ACR. CLEAN, DRY NITROGEN CHARGED AND CAPPED FROM FACTORY.

C. AT FAN COILS TO BC CONTROLLERS: SOFT COIL COPPER PIPE WITH PRE-INSULATED WITH 1/2" THICK INSULATION ON BOTH VAPOR AND LIQUID LINES. INSTALL IN LENGTHENS UP TO 100 FEET WITHOUT ANY JOINTS OR FITTINGS.

D. AT BC CONTROLLERS TO HP UNITS: HARD DRAWN COPPER PIPE WITH FIELD APPLIED 1/2" THICK INSULATION ON BOTH VAPOR AND LIQUID LINES (FOR LINES UP TO NOMINAL 1-1/2" DIAMETER) . AT OUTDOORS PROVIDE PVC JACKETING INSTALLED BY CONTRACTOR WHOM SPECIALIZES IN INSTALLING INSULATION PRODUCT. USE ONLY LONG RADIUS ELBOWS ON THE SUCTION LINE PIPES.

E. INSTALL PIPING AS SHORT AND DIRECT AS POSSIBLE, WITH MINIMUM NUMBER OF JOINTS, ELBOWS AND FITTINGS. PIPING SHALL BE INSTALLED IN A WORKMANSHIP MANNER AND PARALLEL WITH THE BUILDING LINES UNLESS NOTED OTHERWISE.

F. PITCH ALL LINES TOWARDS BACK TOWARD THE OUTDOOR UNIT UNLESS REQUIRED OTHERWISE BY THE MANUFACTURER.

G. LABEL EACH LINE SET TO BC CONTROLLER WITH FAN COIL IT SERVES. PROVIDE SEATON PRINTED LABELS WITH 1/2" LETTERING OR EQUAL. HAND WRITTEN LABELS WILL NOT BE ACCEPTABLE.

H. COPPER TO COPPER JOINTS SHALL BE BRAZED WITH COPPER-PHOSPHOROUS BRAZING ALLOY CONTAINING MINIMUM OF 15% SILVER (SIL-FOS 15 OR APPROVED EQUAL) AND DURING ALL BRAZING AN INERT GAS (SUCH AS DRY NITROGEN OR ARGON) SHALL BE CONTINUOUSLY PASSED THROUGH THE SYSTEM AT A FLOW RATE SUFFICIENT TO MAINTAIN AN OXYGEN FREE ENVIRONMENT TO PREVENT THE FORMATION OF COPPER OXIDE SCALE INSIDE THE PIPING.

I. STRICTLY FOLLOW MITSUBISHI'S INSTALLATION INSTRUCTIONS FOR PRESSURE TESTING, EVACUATION AND CHARGING OF THE SYSTEM. PRESSURIZE THE SYSTEM WITH 600 PSI OF NITROGEN, AND VERIFY IT MAINTAINS THE PRESSURE FOR 24 HOURS BEFORE PROCEEDING WITH EVACUATION. WITH A THERMISTOR VACUUM GAUGE INSTALLED, TRIPLE EVACUATE THE SYSTEM TO 650 MICRONS, AND CONTINUE EVACUATION FOR AT LEAST ONE HOUR. WITH VACUUM PUMP OFF, THE SYSTEM MUST HOLD 500 MICRONS FOR 1 HOUR. KEEP A LOG OF THE TIME AND DATE OF THE TESTING FOR THE COMMISSIONING REPORT.

J. KEEP TRACK OF THE REFRIGERANT LINE LENGTHS. VERIFY THE TOTAL LINE LENGTH ARE LESS THAN THE SCHEDULED LINE LENGTHS. NOTIFY THE ENGINEER IF THE LINE LENGTHS ARE EXCEEDED FOR VERIFICATION BEFORE PROCEEDING. CAREFULLY CALCULATE THE REFRIGERANT CHARGE PER THE MANUFACTURER'S INSTRUCTIONS. KEEP WRITTEN LOG OF THE ADDED REFRIGERANT CHANGE (WITH DOCUMENTATION IN CITY MULTI SERVICE MANUAL).

K. FLARE TUBING AT BC CONTROLLER AND FAN COIL FITTINGS SHALL BE CAREFULLY DONE PER MITSUBISHI CITY MULTI SERVICE MANUAL. CAREFULLY CHECK EACH FLARE MEETS THIS SPECIFICATION. ALSO USE REFRIGERANT OIL ON THE FLARING TOOL TO PREVENT FLARE SPLITTING.

PIPE INSULATION

ARMACELL AP ARMAFLEX EXPANDED CLOSE CELL FLEXIBLE ELASTOMERIC INSULATION WITH 0.27 BTU-IN/HR FT2 F THERMAL CONDUCTIVITY OR APPROVED EQUAL.

PIPING SUPPORTS

SUPERSTRUT OR APPROVED EQUAL. FRAMING CHANNELS, RELATED HANGER PARTS, RODS, BOLTS AND NUTS ARE TO BE "GOLDGALV" ELECTRO-PLATED ZINC.

FLARE CONNECTIONS

PROVIDE SOLID FORGED BRASS FLARE FITTING BY PARKER OR MUELLER BRASS.

CONTROL WIRING

A. BETWEEN THE CONTROLLER (THERMOSTAT) AND FAN COIL SHALL BE 18 GAUGE, STRANDED, UNSHIELDED SHEATHED 2 CONDUCTOR PLENUM RATED CABLE. ON THIS PROJECT WHERE THE THERMOSTAT IS EXISTING THE EXISTING WIRING SHALL BE USED.

B. TRANSMISSION CABLES (COMMUNICATION, M-NET) - 16 GAUGE, STRANDED, SHIELDED 2 CONDUCTOR PLENUM RATED CABLE.

C. WIRING INSTALLED IN CEILING/ATTIC, FLOORS OR WALLS SHALL BE NEATLY STAPLED TO FRAMING AND WITH BUILDING LINES. DO NOT STRING CABLES ACROSS ATTIC OR CRAWL SPACES WHERE THEY CAN DAMAGED. KEEP WRITTEN LOG OF WIRE LENGTHS TO VERIFY LENGTHS DO NOT EXCEED MANUFACTURE'S REQUIREMENTS.

D. WIRING NOT CONCEALED IN WALL, FLOORS OR CEILING/ATTICS SHALL BE INSTALLED IN EMT CONDUITS. INSTALL FLEXIBLE CONDUITS TO UNITS WHICH ARE ON ISOLATORS.

E. LABEL ALL CABLES WITH PANDUIT WRAP AROUND MARKERS WITH ROOM NAME OR OTHER RELEVANT INFORMATION FOR USE IN TROUBLESHOOTING.

PC AND WEB MONITORING

PROVIDE CENTRAL CONTROL SOFTWARE CONNECTED TO OWNERS LOCAL AREA NETWORK. SET UP GRAPHICS SCREENS WHICH SHOW THE BUILDING BASIC FLOOR AND ROOF PLAN WITH ACTUALLY EQUIPMENT LOCATIONS AND MARKS. SET UP SOFTWARE TO EMAIL BUILDING OPERATIONS WITH PROBLEMS (SUCH AS AIR FILTER NEEDS CHANGING OR POWER LOSS TO EQUIPMENT, ETC).

START-UP AND COMMISSION

A. CONTRACTOR SHALL PERFORM START-UP AND COMMISSIONING PER MANUFACTURER'S REQUIREMENTS.

B. MANUFACTURER'S SERVICE REP SHALL BE PRESENT AT FIRST START-UP FOR ASSISTANCE AND TO VERIFY INSTALLATION. ALSO REP SHALL BE AVAILABLE FOR TWO (2) ADDITIONAL SITE VISITS THEREAFTER.

C. CONTRACTOR SHALL OWN AND USE THE MITSUBISHI "MAINTENANCE TOOL" FOR USE AT START-UP AND TROUBLE SHOOTING.

D. CONTRACTOR SHALL KEEP A LOG BOOK (AN ORGANIZED 3-RING BINDER) WITH ALL DOCUMENTS RELATED TO THE INSTALLATION, START-UP AND COMMISSIONING. THE LOG BOOK SHALL BE LEFT ON THE JOBSITE AND BECOME THE PROPERLY OF THE OWNER. THE LOG BOOK SHALL CONTAIN THE MITSUBISHI COMMISSION REPORT AND THE FOLLOWING AT A MINIMUM:

- INSTALLATION DATA, SYSTEM AND INSTALLATION STATUS.
- EVACUATION DETAILS AND METHOD STATEMENT.
- PRESSURE TEST METHOD STATEMENT
- OUTDOOR UNIT OPERATION STATUS
- THE INSTALLED REFRIGERANT LINE LENGTHS
- HEIGHT DIFFERENCES BETWEEN UNITS
- THE INSTALLED COMMUNICATION CABLING LENGTHS

IDENTIFICATION OF EQUIPMENT

INSTALL 3"x1" PLASTIC LABELS, BLACK FACE WITH WHITE LETTING AND TRIM, WITH 1/4" LETTERING WITH EQUIPMENT MARK.

AGENCY APPROVAL STAMP:

IDENTIFICATION STAMP
DIV. OF THE STATE ARCHITECT
APP: 01-120890 INC:
REVIEWED FOR
SS ☑ FLS ☑ ACS ☑
DATE: 10/25/2023

TLCDARCHITECTURE
520 Third St. #250
Santa Rosa, CA 95401
o: 707.525.5600
f: 707.525.5616
tlcd.com

CONSULTANT:
TEP ENGINEERING
880 Second Street
Santa Rosa, CA 95404-4610
707.538.0400 office
707.538.0406 fax

STAMP:

REGISTERED PROFESSIONAL ENGINEER
Timothy P. Boyle
M29511
Exp.Date 6-30-25
MECHANICAL
STATE OF CALIFORNIA

REVISIONS:

Number	Date	Description

NAPA VALLEY COLLEGE WINE EDUCATION CENTER

2277 NAPA VALLEJO HWY
NAPA, CA 94558

NAPA VALLEY COLLEGE
DSA APPLICATION NUMBER:

TEP PROJECT NUMBER:
TEP 23050

DATE:
10/11/2023

MECHANICAL VRF SYSTEM

M-601

© THESE DRAWINGS ARE INSTRUMENTS OF SERVICE AND ARE THE SOLE PROPERTY OF TLCD ARCHITECTURE. MAY NOT BE REPRODUCED WITHOUT THE OWNER'S WRITTEN CONSENT.

10/26/2023 9:51:11 PM

CONTROL SYSTEM SPECIFICATIONS

BUILDING HVAC CONTROL SYSTEM DESCRIPTION (SEE SPECIFICATIONS FOR ADDITIONAL REQUIREMENTS)

THE BUILDING CONTROL SYSTEM IS AN EXTENSION OF THE EXISTING DELTA ENERGY MANAGEMENT SYSTEM. PROVIDE DELTA ENERGY MANAGEMENT SYSTEM (EMS) BY MESA Energy Systems (Alan Stramel, 510-670-1690, astramel@emcor.net)

SUBMITTALS - PROVIDE IN SUBMITTAL COMPLETE POINT-TO POINT WIRING DIAGRAMS, PRODUCT DATA SHEETS FOR ALL CONTROLLER, SENSORS, ENCLOSURES, CABLING, AND OTHER CONSTRUCTION MATERIALS BEING USED. PROVIDE DETAILS ON WHAT GRAPHIC SCREENS ARE BEING PROVIDED.

COMMISSIONING AND JOB CLOSE OUT - PROVIDE A WRITTEN REPORT (WITH DATE, TIME AND WHOM DID THE WORK) THAT EACH CONTROL SENSOR, RELAY, MOTORIZED DAMPER AND ANY OTHER COMPONENT HAS BEEN CALIBRATED AND REALLY CORRECTLY IN THE EMS SYSTEM THROUGH IT'S OPERATING RANGE. PROGRAM ALL OCCUPIED AND UNOCCUPIED SCHEDULES PER THE OWNERS DIRECTIONS. ALL ALARM POINTS AND SENDING INFO (EMAIL OR TEXT), ALL DATA LOGGING REQUIRED TO SHOWN THE SYSTEM IS OPERATING TO THE SEQUENCE.

PROVIDE DELTA NETWORK MANAGER AND DEDICATED EQUIPMENT CONTROLLERS FOR EACH UNIT.

THERMOSTAT AND SENSORS - PROVIDE NETWORKED THERMOSTATS WITH BACKLIT LCD DISPLAYS. PROVIDE ADJUSTABLE TEMPERATURE BUTTONS AND OCCUPANCY OVERRIDE BUTTON.

SOFTWARE - PROVIDE OWNER WITH ANY NECESSARY SOFTWARE FOR TROUBLESHOOTING AND COMMISSIONING OF THE SYSTEM. PROGRAM ALL GRAPHIC SCREENS.

GRAPHIC SCREENS: PROVIDE GRAPHIC SCREENS COMPATIBLE WITH THE EXISTING EMS SYSTEM.

POWER CONDITIONING - PROVIDE ANY LOW VOLTAGE TRANSFORMERS AND FUSED DISCONNECTS AT CONTROL PANELS. ALSO PROVIDE SURGE SUPPRESSION. PROVIDE ANY BATTERY BACKUP WHERE MEMORY LOSS IS POSSIBLE.

COMMISSIONING AND JOB CLOSE OUT - PROVIDE A WRITTEN REPORT (WITH DATE, TIME AND WHOM DID THE WORK) THAT EACH CONTROL SENSOR, RELAY, MOTORIZED DAMPER AND ANY OTHER COMPONENT HAS BEEN CALIBRATED AND REALLY CORRECTLY IN THE EMS SYSTEM THROUGH IT'S OPERATING RANGE. PROGRAM ALL OCCUPIED AND UNOCCUPIED SCHEDULES PER THE OWNERS DIRECTIONS. ALL ALARM POINTS AND SENDING INFO (EMAIL OR TEXT), ALL DATA LOGGING REQUIRED TO SHOWN THE SYSTEM IS OPERATING TO THE SEQUENCE.

CONTROL NOTES

1. ALL LOW VOLTAGE WIRING IN ATTIC SPACE OR CONCEALED IN WALLS TO BE IN PLENUM RATED CABLE. ALL WIRING EXPOSED OR IN MECHANICAL ROOMS TO BE IN EMT CONDUIT. WIRING FROM ROOF TO UNITS TO BE IN SEAL TIGHT CONDUIT. ALL WIRING IN ATTIC SPACES SHALL BE RAN ALONG THE FRAMING AND NEATLY ATTACHED TO FRAMING AT MINIMUM 8'INTERVALS.
2. COMMISSIONING: EACH FAN AND DAMPER SHALL BE INDEPENDENTLY TESTED FOR COMPLETE OPEN AND CLOSE OPERATION. TEST AND CALIBRATE ECONOMIZER OPERATION FROM THE THERMOSTAT. SUBMIT TO THE ENGINEER A REPORT STATING THE DATE AND SIGNED BY THE PERSON PERFORMING THE TESTING.
3. SUBMIT FOR APPROVAL COMPLETE POINT-TO-POINT WIRING DIAGRAMS AND CONTROL PANEL DETAILS (SIZE AND LAYOUT). PROVIDE TWO SET OF "AS-BUILT" CONTROL DRAWINGS UPON COMPLETION.
4. PROGRAM ON/OFF AND HOLIDAYS TO SCHEDULE PROVIDE BY OWNER.
5. PROVIDE ON THE GRAPHICS USER INTERFACE (GUI) AS FOLLOWS:
   - A. DYNAMIC GRAPHICS FOR PUMPS, FANS, AND WATER HEATERS.
   - B. SYSTEM DIAGRAMMATIC WITH SENSOR VALUES AND SETPOINTS VALUES.
   - C. HAND-OFF-AUTO CONTROL FOR ALL FANS, PUMPS, AND EQUIPMENT.

CONTROLS LEGEND

3P	THREE PHASE
AO	ANALOG OUTPUT
AI	ANALOG INPUT
DO	DIGITAL OUTPUT
DI	DIGITAL INPUT
DMP	DAMPER
DS	DISCONNECT SWITCH
GUI	GRAPHICAL USER INTERFACE
H	HUMIDISTAT OR TRANSMITTER
M	MOTOR OR ACTUATOR
MS	MOTOR STARTER
OS	OCCUPANCY SENSOR
SED	SEE ELECTRICAL DRAWINGS
TS	TEMPERATURE SENSOR
VAC	VOLTS ALTERNATING CURRENT
VFD	VARIABLE FREQUENCY DRIVE

CONTROL SYSTEM SEQUENCE OF OPERATIONS

ROOFTOP AC UNIT, RTU-1 (SIMILAR FOR RTU-2, RTU-3 & RTU-4)

OCCUPIED MODE :
ROOFTOP HVAC UNIT, SHALL GO INTO OCCUPIED MODE WHEN ACTIVATED BY EITHER THE TIME SCHEDULE OR BY "UNOCCUPIED OVERRIDE" (SEE BELOW) . THE SUPPLY FAN SHALL OPERATE CONTINUOUSLY DURING OCCUPIED MODE.

UNOCCUPIED MODE :
WHEN THE TIME SCHEDULE GOES TO UNOCCUPIED THE FANS ON THE ABOVE SYSTEMS SHALL GO INTO "AUTO" MODE AND CYCLE WITH A CALL FOR COOLING OR HEATING FROM THE ZONE. THE CONTROLS WILL GO INTO "SETBACK" WITH A COOLING SETPOINT OF 95 F AND HEATING SETPOINT OF 55 F (ADJUSTABLE). IF A ZONE THERMOSTAT DROPS BELOW THE HEATING SETBACK SETPOINT, THE ZONE SHALL OPERATE TO BRING THE SPACE TEMPERATURE UP TO THE SETPOINT.

UNOCCUPIED OVERRIDE :
EACH ZONE CONTROLLER SHALL HAVE A BUTTON TO PROVIDE OCCUPIED OVERRIDE. WHEN DEPRESSED SHALL PROVIDE 4 HOURS (ADJUSTABLE) OF OVERRIDE TO OCCUPIED MODE.

SUPPLY AIR DUCT SMOKE DETECTION (RTU-5, RTU-6, MAU-1 ONLY) :
UPON DETECTION OF PRODUCTS OF COMBUSTION BY THE SUPPLY AIR DUCT SMOKE DETECTOR, THE RELATED UNIT WILL SHUT DOWN IMMEDIATELY AND SHUT THE MOTORIZED DAMPER BELOW THE UNIT. A DRY CONTACT SHALL CLOSE TO THE FIRE ALARM SYSTEM.

BUILDING PRESSURIZATION CONTROL
ROOFTOP UNIT ECONOMIZER SHALL CONTROL THE POWER EXHAUST FAN SPEED BASED ON THE ROOM PRESSURE.

CO2 DEMAND VENTILATION CONTROL
WHEN A CO2 ZONE SENSORS REACHES THE DEMAND VENTILATION SETPOINT (800 PPM, ADJUSTABLE), THE UNIT OA DAMPER SHALL BE INCREASE, AND A DEMAND SIGNAL SHALL RAMP UP TO SIGNAL NEED FOR MORE VENTILATION FROM THE OUTSIDE AIR DAMPERS.ECONOMIZER CONTROL.

EXHAUST FAN EF-1 (TYPICAL EF-5)
EXHAUST FAN SHALL OPERATE FROM ON A OCCUPIED TIME SCHEDULE BASED WITHIN THE EMS SYSTEM. ON/OFF FAN STATUS MONITORED ON THE EMS GUI.

EXHAUST FAN EF-2 (TYPICAL FOR EF-3 , EF-4)
EXHAUST FAN SHALL OPERATE FROM WALL SPEED CONTROLLER SWITCH. ON/OFF FAN STATUS MONITORED ON THE EMS GUI.

SUPPLY FAN SF-1 :
SUPPLY FAN SF-1 SHALL OPERATE WHEN ANY ONE OF THE FAN COILS (FC-3 AND FC-4) IT SERVES IS ACTIVATED.

FUME HOOD EXHAUST AND MAKE UP AIR CONTROL SEQUENCE

HOOD EXHAUST SYSTEM OPERATES IN TWO MODES: SASH OPEN AND SASH CLOSED.

HOOD EXHAUST FAN HE-1 AND FAN AT FC-2 SHALL OPERATE CONTINUOUSLY 24/7 WITH FAN STATUS AND FAN VIBRATION STATUS MONITORED AND ALARMED BY THE EMS SYSTEM UPON A FAILURE. THE OPERATING FAN SYSTEMS SHALL BE SHOWN ON THE EMS GUI.

SASH OPEN MODE : WHEN THE SASH POSITION SENSOR DETECTS ANY OPENING OF THE SASH, THE HOOD FAN HE-1 BYPASS DAMPER SHALL BE CLOSED PROVIDE FULL AIR VOLUME FROM THE HOOD. WHEN THE SASH POSITION IS COMPLETELY CLOSED THE BYPASS SHALL OPEN SO EXHAUST AIR VOLUME FROM THE HOOD GO TO MINIMUM. AND RTU-1 INDOOR FAN SHALL BE ACTIVATED AND OUTSIDE AIR GO TO MINIMUM.

SASH CLOSED MODE : WHEN SASH POSITION SENSORS DETECT COMPLETED CLOSED SASH, THE EXHAUST FAN HE-1 BYPASS DAMPER SHALL OPEN PROVIDING MINIMUM AIRFLOW FROM THE HOOD. AND RTU-1 FAN DEACTIVATE (GO BACK TO CONTROL BY THE ROOM THERMOSTAT). FAN AT FC-2 TO REMAIN ON.

THE EMS CONTROL SYSTEM SHALL MONITOR THE SASH POSITION SHALL BE DISPLAYED ON THE EMS SCREEN. ALSO STATUS OF THE VIBRATION AND MOTOR CURRENT DISPLAYED ON THE EMS SCREEN.

SPACE TEMPERATURE CONTROLS : THE LAB PREP 105 AND WINE LAB 104 SHALL EACH HAVE SEPARATE TEMPERATURE CONTROL WITH OCCUPIED AND SETBACK TEMPERATURES AND TIME SCHEDULES IN THE CENTRAL CONTROLLER AND EMS SYSTEM. DURING THE OCCUPIED MODE THE INDOOR FANS SHALL OPERATE CONTINUOUSLY AND PROVIDE STAGED HEATING AND COOLING TO MAINTAIN THE ROOM TEMPERATURE SETPOINTS, 70 HEATING AND 73 F COOLING, ADJUSTABLE THRU THE GUI.

DURING UNOCCUPIED MODE SHOULD THE SPACE TEMPERATURE SETPOINTS SHALL GO TO SETBACK (60 F HEATING, 95 F COOLING ADJUSTABLE THRU GUI). SHOULD A ROOM EXCEED THE SETPOINTS THE UNIT SHALL ACTIVATE HEATING OR COOLING STAGES TO MAINTAIN THE SETBACK TEMPERATURE.

RTU-1 DUCT SMOKE DETECTOR ACTIVATION : IF THE DUCT SMOKE DETECTOR ON RTU-1 DETECTOR PRODUCTS OF COMBUSTION, THE BLOWER SHALL BE DEACTIVATED, AND ALL OTHER FAN SHALL STAY OPERATING IN THE OCCUPIED MODE. THE DUCT SMOKE DETECTOR SHALL BE CONNECTED TO THE BUILDING FIRE ALARM SYSTEM UNDER DIVISION 26 ELECTRICAL.

WATER HEATING SYSTEM

HOT WATER CIRCULATION PUMP P-1 :
THE HOT WATER PUMPS SHALL OPERATE FROM A TIME SCHEDULE AND CYCLE ON/OFF BASED ON THE RETURN WATER SETPOINT OF 115 F (ADJUSTABLE FROM THE GUI).

WATER HEATER WH-1:
THE WATER HEATER FAULT ALARM CONTACT SHALL BE MONITORED AND SET UP TO ALARM UPON CLOSURE.

HOT WATER CIRCULATION PUMP P-2 :
THE HOT WATER PUMPS SHALL OPERATE FROM A TIME SCHEDULE AND CYCLE ON/OFF BASED ON THE RETURN WATER SETPOINT OF 115 F (ADJUSTABLE FROM THE GUI).

MITSUBISHI SYSTEMS MONITORING & BACnet COMMUNICATIONS

THE DELTA CONTROL SYSTEM SHALL MONITOR THE MITSUBISHI SYSTEMS THROUGH A BACnet COMMUNICATIONS BASED ON ASHRAE STANDARD 135-2010 AND PROVIDE COMPLETE OBJECT POINTS LIST PER CITYMULTI FORM SW-BACnet 201604 (ON/OFF STATUS, FAN SPEED, MODE, ETC) OF EACH SYSTEM AND DISPLAY ON THE GUI. ALSO MONITOR ALARM POINTS AND PROVIDE ALARMING IN THE DELTA SYSTEM TO ALERT OWNER.

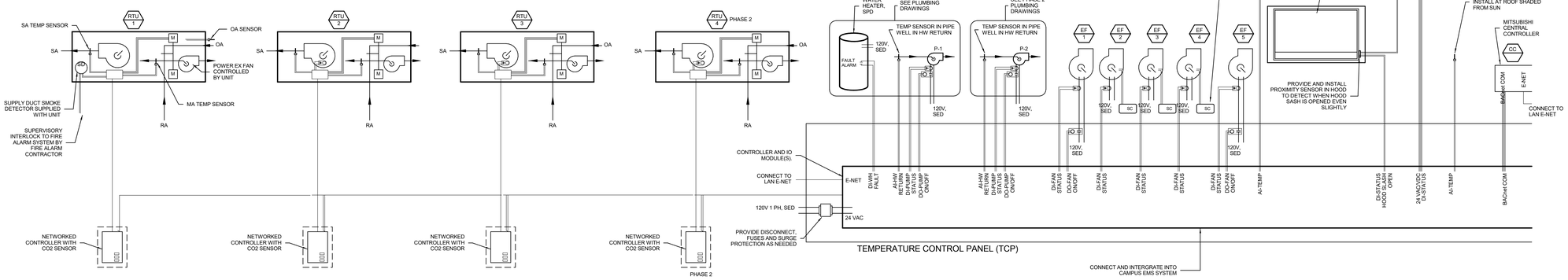

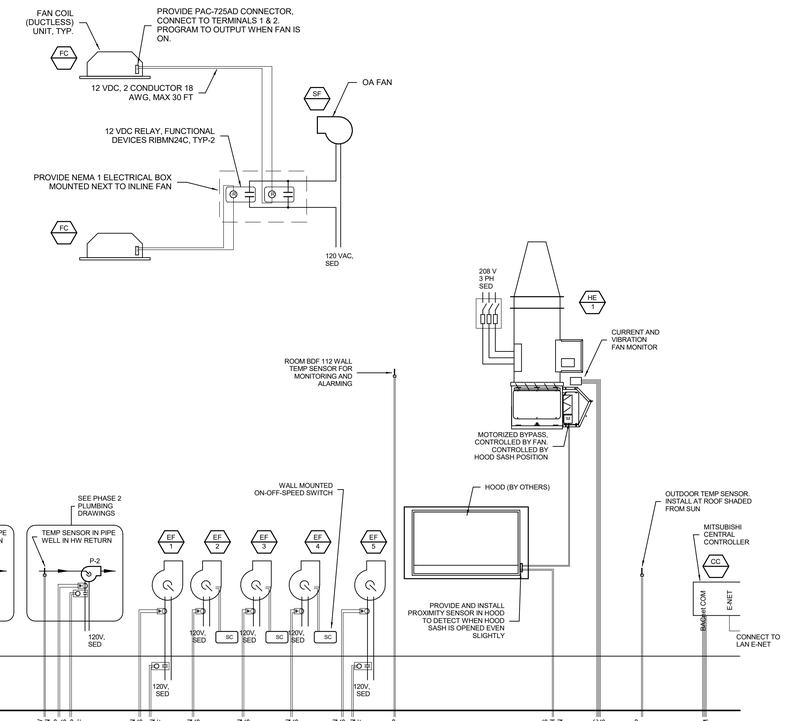

1 TEMPERATURE CONTROLS

NOT TO SCALE

AGENCY APPROVAL STAMP:

IDENTIFICATION STAMP
DIV. OF THE STATE ARCHITECT
APP: 01-120890 INC:
REVIEWED FOR
SS ☑ FLS ☑ ACS ☑
DATE: 10/25/2023

TLCDARCHITECTURE
520 Third St. #250
Santa Rosa, CA 95401
o: 707.525.5600
f: 707.525.5616
tlcd.com

CONSULTANT:
TEP ENGINEERING
880 Second Street
Santa Rosa, CA 95404-4610
707.538.0400 office
707.538.0406 fax

STAMP:

REGISTERED PROFESSIONAL ENGINEER
M29511
Exp.Date 6-30-25
MECHANICAL
STATE OF CALIFORNIA

REVISIONS:

Number	Date	Description

NAPA VALLEY COLLEGE WINE EDUCATION CENTER

2277 NAPA VALLEJO HWY
NAPA, CA 94558

NAPA VALLEY COLLEGE
DSA APPLICATION NUMBER

TEP PROJECT NUMBER
TEP #3650

DATE
10/11/2023

MECHANICAL CONTROLS

M-602

© THESE DRAWINGS ARE INSTRUMENTS OF SERVICE AND ARE THE SOLE PROPERTY OF TLCD ARCHITECTURE. ANY USE WITHOUT WRITTEN CONSENT IS PROHIBITED

10/9/2023 9:51:11 PM

NAPA VALLEY COLLEGE WINE EDUCATION CENTER - 222020 R23

CELLULAR SERVICE IN BUILDING SIGNAL ENHANCEMENT

A. TELECOM CONTRACTOR SHALL PROVIDE A CELLULAR SIGNAL BOOSTER SYSTEM THAT WILL PROVIDE CELLULAR SERVICE THROUGHOUT THE BUILDING AND SUPPORT OVER 100 SIMULTANEOUS USERS. THE SYSTEM WILL PROVIDE SEAMLESS COVERAGE FOR ALL MAJOR CELLULAR CARRIERS AND ALL CURRENT 2G, 3G, 4G, 4G LTE, AND 5G NETWORKS WITHIN BUILDINGS.

B. CONTRACTOR IS RESPONSIBLE FOR TESTING THE ENTIRE BUILDING TO DETERMINE ENHANCEMENT REQUIREMENTS. UPON COMPLETION OF THE SYSTEM ENHANCEMENT, A FINAL TEST SHALL BE THAT THE VERIFY THAT CRITERIA IN PARAGRAPHS E AND F BELOW ARE MET.

C. THE CELLULAR CONSUMER SIGNAL BOOSTER SYSTEM SHALL BE CERTIFIED BY THE FEDERAL COMMUNICATIONS COMMISSION.

D. THE SYSTEM SHALL BE FULLY INDEPENDENT OF ANY BROADBAND CONNECTION THEREBY ALLOWING FULL FUNCTIONALITY WITHOUT USING VALUABLE BANDWIDTH. PROVIDE ADJUSTABLE GAIN AND FULL AUTO-GAIN CONTROL (AGC) FEATURE TO ENSURE CONSISTENT SIGNAL PERFORMANCE. THE SYSTEM HARDWARE DESIGN SHALL SEGREGATE THE FREQUENCIES FOR CRISP, CLEAR COMMUNICATION.

E. FREQUENCIES: 824-894/1850-1995MHZ, 1850-1915MHZ, 776-787MHZ/746-757MHZ, 698-716MHZ/728-746MHZ, 1710-1755MHZ 2110-2155MHZ. INPUT IMPEDANCE 50 OHM AND MAXIMUM GAIN 80DB.

F. PROVIDE AND INSTALL A FULLY FUNCTIONAL SYSTEM. THE SYSTEMS SHALL INCLUDE BUT NOT LIMITED TO DIGITAL BAND SELECTIVE REPEATERS, FILTERS, POWER SUPPLY, MONITORING UNIT, OUTDOOR AND INDOOR BAND COMBINERS, SPLITTERS, ANTENNAE, CABLE, LIGHTNING PROTECTION AND OTHER HARDWARE AS REQUIRED.

ANCHORAGE NOTES

ELECTRICAL ANCHORAGE NOTES:

ALL ELECTRICAL COMPONENTS SHALL BE ANCHORED AND INSTALLED PER THE DETAILS ON THE DSA APPROVED CONSTRUCTION DOCUMENTS. THE FOLLOWING COMPONENTS SHALL BE ANCHORED OR BRACED TO MEET THE FORCE AND DISPLACEMENT REQUIREMENTS PRESCRIBED IN THE 2022 CBC SECTIONS 1617A.1.18 THROUGH 1617A.1.26 AND ASCE 7-16, CHAPTER 13, 26, AND 30.

1. ALL PERMANENT EQUIPMENT AND COMPONENTS.
2. TEMPORARY, MOVABLE OR MOBILE EQUIPMENT THAT IS PERMANENTLY ATTACHED (e.g. HARD WIRED) TO THE BUILDING UTILITY SERVICES SUCH AS ELECTRICITY, GAS OR WATER. "PERMANENTLY ATTACHED" SHALL INCLUDE ALL ELECTRICAL CONNECTIONS EXCEPT PLUGS FOR 110/220 VOLT RECEPTACLES HAVING A FLEXIBLE CABLE.
3. TEMPORARY, MOVABLE OR MOBILE EQUIPMENT WHICH IS HEAVIER THAN 400 POUNDS OR HAS A CENTER OF MASS LOCATED 4 FEET OR MORE ABOVE THE ADJACENT FLOOR OR ROOF LEVEL THAT DIRECTLY SUPPORT THE COMPONENT IS REQUIRED TO BE RESTRAINED IN A MANNER APPROVED BY DSA.

THE FOLLOWING ELECTRICAL COMPONENTS SHALL BE BE POSITIVELY ATTACHED TO THE STRUCTURE, BUT NEED NOT DEMONSTRATE DESIGN COMPLIANCE WITH THE REFERENCES NOTED ABOVE. THESE COMPONENTS SHALL HAVE FLEXIBLE CONNECTIONS PROVIDED BETWEEN THE COMPONENT AND ASSOCIATED CONDUIT. FLEXIBLE CONNECTIONS MUST ALLOW MOVEMENT IN BOTH TRANSVERSE AND LONGITUDINAL DIRECTIONS.

A. COMPONENT WEIGHING LESS THAN 400 POUNDS AND HAVING A CENTER OF MASS LOCATED 4 FEET OR LESS ABOVE THE ADJACENT FLOOR OR ROOF LEVEL THAT DIRECTLY SUPPORT THE COMPONENT.
B. COMPONENTS WEIGHING LESS THAN 20 POUNDS, OR IN THE CASE OF DISTRIBUTED SYSTEMS, LESS THAN 5 POUNDS PER FOOT, WHICH ARE SUSPENDED FROM A ROOF OR FLOOR OR HUNG FROM WALL.

THE ANCHORAGE OF ALL ELECTRICAL COMPONENTS SHALL BE SUBJECT TO THE APPROVAL OF THE DESIGN PROFESSIONAL IN GENERAL RESPONSIBLE CHARGE OR STRUCTURAL ENGINEER DELEGATED RESPONSIBILITY AND ACCEPTANCE BY DSA. THE PROJECT INSPECTOR WILL VERIFY THAT ALL COMPONENTS AND EQUIPMENT HAVE BEEN ANCHORED IN ACCORDANCE WITH THE ABOVE REQUIREMENTS.

ELECTRICAL DISTRIBUTION SYSTEM BRACING NOTE:

ELECTRICAL DISTRIBUTION SYSTEMS SHALL BE BRACED TO COMPLY WITH THE FORCES AND DISPLACEMENTS PRESCRIBED IN ASCE 7-16 SECTION 13.3 AS DEFINED IN ASCE 7-16 SECTION 13.6.5, 13.6.6, 13.6.7, 13.6.8, AND 2022 CBC, SECTIONS 1617A.1.24, 1617A.1.25, AND 1617A.1.26.

THE METHOD OF SHOWING BRACING AND ATTACHMENTS TO THE STRUCTURE FOR THE IDENTIFIED DISTRIBUTION SYSTEM ARE AS NOTED BELOW. WHEN BRACING AND ATTACHMENTS ARE BASED ON A PREAPPROVED INSTALLATION GUIDE (eg., HCAi OPM FOR 2013 CBC OR LATER), COPIES OF THE BRACING SYSTEM INSTALLATION GUIDE OR MANUAL SHALL BE AVAILABLE ON THE JOBSITE PRIOR TO THE START OF AND DURING THE HANGING AND BRACING OF THE DISTRIBUTION SYSTEMS. THE STRUCTURAL ENGINEER OF RECORD SHALL VERIFY THE ADEQUACY OF THE STRUCTURE TO SUPPORT THE HANGER AND BRACE LOADS.

ELECTRICAL DISTRIBUTION SYSTEMS ARE:
[X] - OPTION 1: DETAILED ON THE APPROVED DRAWINGS WITH PROJECT SPECIFIC NOTES AND DETAILS.
[ ] - OPTION 2: SHALL COMPLY WITH THE APPLICABLE OSHPD PRE-APPROVAL (OPM #).

LIGHT FIXTURES:

1.7 LUMINAIRES

1.7.1 ALL LUMINAIRES SHALL BE POSITIVELY ATTACHED TO THE CEILING SUSPENSION SYSTEMS BY MECHANICAL MEANS PER CALIFORNIA ELECTRICAL CODE (CEC) ARTICLE 410.36. A MINIMUM OF TWO SCREWS OR APPROVED FASTENERS CAPABLE OF RESISTING A HORIZONTAL FORCE EQUAL TO THE WEIGHT OF THE FIXTURE ARE REQUIRED AT EACH LIGHT FIXTURE, PER ASTM E580 SECTION 5.3.1. SEE SECTION 2.1.1 BELOW FOR PENDANT LUMINAIRES.

1.7.2 SURFACE-MOUNTED LUMINAIRES SHALL BE ATTACHED TO THE MAIN RUNNER WITH AT LEAST TWO POSITIVE CLAMPING DEVICES ON EACH FIXTURE. THE CLAMPING DEVICE SHALL COMPLETELY SURROUND THE SUPPORTING CEILING RUNNER AND BE MADE OF STEEL WITH A MINIMUM THICKNESS OF #14-GAUGE. ROTATIONAL SPRING CATCHES DO NOT COMPLY. A #12-GAUGE SLACK SAFETY WIRE SHALL BE CONNECTED FROM EACH CLAMPING DEVICE TO THE STRUCTURE ABOVE. PROVIDE ADDITIONAL SUPPORTS WHEN LUMINAIRES MEASURE 8-FEET OR LONGER OR EXCEED 56 POUNDS. MAXIMUM SPACING BETWEEN SUPPORTS SHALL NOT EXCEED 8-FEET.

1.7.3 LUMINAIRES WEIGHING LESS THAN OR EQUAL TO 10 POUNDS MAY BE SUPPORTED DIRECTLY ON THE CEILING RUNNERS, BUT THEY SHALL HAVE A MINIMUM OF ONE #12-GAUGE SLACK SAFETY WIRE CONNECTED FROM THE LUMINAIRE HOUSING TO THE STRUCTURE ABOVE.

1.7.4 LUMINAIRES WEIGHING GREATER THAN 10 POUNDS BUT LESS THAN OR EQUAL TO 56 POUNDS MAY BE SUPPORTED DIRECTLY ON THE CEILING RUNNERS, BUT THEY SHALL HAVE A MINIMUM OF TWO # 12-GAUGE SLACK SAFETY WIRES CONNECTED FROM THE LUMINAIRE HOUSING AT DIAGONAL CORNERS TO THE STRUCTURE ABOVE.

EXCEPTION: ALL LUMINAIRES GREATER THAN 2-FEET WIDE BY 4-FEET LONG AND NO MORE THAN 8-FEET LONG WEIGHING LESS THAN 56 POUNDS SHALL HAVE A #12-GAUGE SLACK SAFETY WIRE AT EACH CORNER.

1.7.5 ALL LUMINAIRES WEIGHING GREATER THAN 56 POUNDS SHALL BE INDEPENDENTLY SUPPORTED BY NOT LESS THAN FOUR TAUT #12-GAUGE HANGER WIRES (ONE AT EACH CORNER) ATTACHED FROM THE LUMINAIRE HOUSING TO THE STRUCTURE ABOVE OR OTHER APPROVED HANGERS.

GENERAL DEMOLITION NOTES

1. THE CONTRACTOR SHALL VERIFY IN THE FIELD ALL LINES, LEVELS, DIMENSIONS AND EXISTING CONDITIONS. THE INFORMATION ON THE DRAWINGS REGARDING EXISTING ELECTRICAL EQUIPMENT AND BRANCH CIRCUITS IS THE RESULT OF FIELD SURVEY AND IS ACCURATE TO THE BEST OF OUR KNOWLEDGE. IT IS INTENDED, HOWEVER, AS A GUIDE FOR USE IN VERIFICATION ONLY.
2. ANY EXISTING ELECTRICAL EQUIPMENT IN THE AREA OF NEW CONSTRUCTION NOT SHOWN ON THE EXISTING PLANS SHALL BE DOCUMENTED AND SUBMITTED TO THE ENGINEER FOR DETERMINATION OF ACTION REQUIRED.
3. WHEREVER THE REMOVAL OF EXISTING ELECTRICAL EQUIPMENT IS CALLED FOR AND ALL EQUIPMENT ON A PARTICULAR BRANCH CIRCUIT IS TO BE REMOVED, ALL CONDUIT AND WIRE BACK TO THE PANEL SHALL BE ENTIRELY REMOVED AND THE CIRCUIT IN PANEL SHALL BE MARKED "SPARE". THIS APPLIES TO SIGNAL AND COMMUNICATIONS SYSTEMS EQUIPMENT, CONDUIT, AND WIRE AS WELL.
4. WHEREVER THE REMOVAL OF EXISTING ELECTRICAL EQUIPMENT IS CALLED FOR AND ALL EQUIPMENT ON A PARTICULAR BRANCH CIRCUIT IS NOT TO BE REMOVED, THE CIRCUIT SHALL BE MAINTAINED CONTINUOUS TO THE EXISTING EQUIPMENT IN USE WITH MINIMUM INTERRUPTIONS OF POWER. THIS APPLIES TO SIGNAL AND COMMUNICATIONS SYSTEMS EQUIPMENT, CONDUIT, AND WIRE AS WELL.
5. WHENEVER THE REMOVAL OF EXISTING CONSTRUCTION REVEALS ELECTRICAL WORK THAT IS TO REMAIN, BUT IS IN CONFLICT WITH NEW CONSTRUCTION, RELOCATE THE EXISTING ELECTRICAL WORK AS NECESSARY TO AVOID ANY CONFLICT. RELOCATION WORK SHALL BE DONE TO MINIMIZE ANY INTERRUPTIONS OF POWER.
6. CARE SHALL BE TAKEN IN ORDER TO IDENTIFY AND PROTECT ALL EXISTING ELECTRICAL WORK THAT IS TO REMAIN.
7. ENSURE RECONNECTION OF EXISTING DEVICES WHOSE CIRCUITS HAVE BEEN INTERRUPTED BY DEMOLITION BY PROVIDING NEW CONNECTION TO ANOTHER EXISTING TO REMAIN DEVICE OR PANEL.
8. ALL EXISTING ELECTRICAL EQUIPMENT SHOWN ON THE PLANS FOR NEW WORK ARE THOSE WHICH ARE TO BE REUSED DURING SOME PHASE OF THE NEW CONSTRUCTION OR REQUIRE SOME SPECIAL CONSIDERATIONS.
9. WHENEVER THE REMOVAL OF EXISTING ELECTRICAL PANELBOARDS ARE CALLED FOR AND ALL EXISTING BRANCH CIRCUITS ARE NOT TO BE REMOVED, THE EXISTING BRANCH CIRCUITS SHALL BE CONNECTED TO OTHER EXISTING ELECTRICAL EQUIPMENT OR PANELS STILL IN USE WITH MINIMUM INTERRUPTIONS OF POWER. ALSO, IF REQUIRED, THESE SAME BRANCH CIRCUITS SHALL BE RECONNECTED TO RELOCATED EXISTING OR NEW PANELBOARDS AS PART OF THE NEW CONSTRUCTION. THIS APPLIES TO SIGNAL AND COMMUNICATIONS SYSTEMS EQUIPMENT, CONDUIT AND WIRE AS WELL.
10. THE ELECTRICAL CONTRACTOR SHALL REVISE EXISTING PANEL SCHEDULES TO CORRESPOND TO ACTUAL CONDITIONS AFTER ALL DEMOLITION AND NEW WORK IS COMPLETED.
11. REMOVE ALL ABANDONED CONDUIT AND WIRE ABOVE CEILINGS.
12. WHEN ELECTRICAL EQUIPMENT OR DEVICE IS REMOVED FROM AN EXISTING WALL OR CEILING WHICH IS TO REMAIN, PATCH ABANDONED OPENINGS TO MATCH EXISTING FINISH.
13. IN GENERAL, THE DEMOLITION PLANS SHOW ALL EXISTING EQUIPMENT THAT IS TO BE REMOVED UNLESS NOTED OTHERWISE. HOWEVER, ELECTRICAL EQUIPMENT, WHETHER SHOWN ON THIS DRAWING OR NOT, WHERE LOCATED IN THE AREA SCHEDULED TO BE DEMOLISHED, SHALL BE REMOVED COMPLETELY (INCLUDING CONDUIT AND WIRES BACK TO THE LAST REMAINING FIXTURE, OUTLET, DEVICE, ETC.) UNLESS OTHERWISE NOTED. COORDINATE DEMOLITION WORK WITH ARCHITECT AND GENERAL CONTRACTOR.
14. EXISTING CONDUIT FEEDS UP THROUGH FLOOR SHALL BE CUT OFF AND PLUGGED FLUSH WITH FLOOR WHERE EXISTING WALLS, ETC., ARE REMOVED. REMOVE CONDUCTORS FROM THE POINT BACK TO LAST OUTLET REMAINING IN SERVICE.
15. IT SHALL BE THE RESPONSIBILITY OF THIS CONTRACTOR TO MAINTAIN CONTINUITY OF ALL ELECTRICAL SYSTEMS, EQUIPMENT, ETC. REMAINING IN OPERATION WHICH IS BEING FED BY AN ABANDONED OUTLET. MAINTAINING CONTINUITY SHALL CONSIST OF REROUTING OF CONDUIT, WIRE, ETC. AS REQUIRED.
16. IT SHALL BE THIS CONTRACTOR'S RESPONSIBILITY TO VERIFY LOCATIONS OF EXISTING CIRCUITS AND ADJUST CIRCUIT NUMBERS ACCORDING TO EXISTING CONDITIONS IF REQUIRED
17. THE ELECTRICAL CONTRACTOR SHALL COORDINATE WITH THE OWNER PRIOR TO REMOVAL OF EXISTING ELECTRICAL EQUIPMENT AND TURN OVER REMOVED EQUIPMENT THAT THE OWNER REQUESTS, IN AS-FOUND CONDITION. EQUIPMENT THAT IS TO BE TURNED OVER SHALL BE BOXED AND TAGGED TO IDENTIFY THE SPECIFIC EQUIPMENT. EQUIPMENT TO BE TEMPORARILY REMOVED DUE TO THE CONSTRUCTION SHALL BE CLEANED AND RE-INSTALLED IN ITS ORIGINAL CONDITION OR AS REQUIRED.
18. WHERE EXISTING WALLS HAVE BEEN REMOVED, AND THERE ARE EXISTING CONDUIT FEEDS WHICH HAVE BEEN CUT OFF AND CAPPED FLUSH WITH THE FLOOR, IT IS THE CONTRACTOR'S RESPONSIBILITY TO IDENTIFY AND DIMENSION ALL SUCH CONDUITS ON THE "AS-BUILT" DRAWINGS.
19. IF ANY EQUIPMENT THAT IS SCHEDULED TO REMAIN IN OPERATION IS DAMAGED BY THE CONTRACTOR, IT SHALL BE REPLACED TO ITS ORIGINAL CONDITION SATISFACTORY TO THE OWNER AT CONTRACTOR'S EXPENSE.

ABBREVIATIONS

AFF	ABOVE FINISHED FLOOR
AFG	ABOVE FINISHED GRADE
C	CONDUIT
CATV	CABLE TV
CB	CIRCUIT BREAKER
CO	CONDUIT ONLY
CU	COPPER
DP	DISTRIBUTION PANEL
E.C.	ELECTRICAL CONTRACTOR
E.G.C.	EQUIPMENT GROUNDING CONDUCTOR
EM	EMERGENCY
EMS	ENERGY MANAGEMENT SYSTEM
EQPT	EQUIPMENT
EXT	EXTERIOR
(E)	EXISTING
(ER)	EXISTING EQUIPMENT TO BE RELOCATED
(EX)	EXISTING EQUIPMENT TO BE DEMOLISHED
FA	FIRE ALARM
FMC	FLEXIBLE METALLIC CONDUIT
FO	FIBER OPTIC
FTL	FEED THROUGH LUGS
GEC	GROUNDING ELECTRODE CONDUCTOR
GFI	GROUND FAULT CIRCUIT INTERRUPTING TYPE RECEPTACLE
INV	INVERTER, EM LIGHTING OR PHOTOVOLTAIC.
IDF	INTERMEDIATE DISTRIBUTION FRAME
L	LOCKABLE
LFP	LITHIUM IRON PHOSPHATE
LTG	LIGHTING
LV	LOW VOLTAGE
MC	METAL CLAD CABLING
MCB	MAIN CIRCUIT BREAKER
MDF	MAIN DISTRIBUTION FRAME
MFGR	MANUFACTURER
MLO	MAIN LUGS ONLY
MP	MECHANICAL/PLUMBING DISCIPLINE
MTD	MOUNTED
(N)	NEW
N.E.C.	NATIONAL ELECTRICAL CODE
NEU	NEUTRAL
NIEC	NOT IN ELECTRICAL CONTRACT
OAH	OVERALL HEIGHT
OFCI	OWNER FURNISHED, CONTRACTOR INSTALLED
P	INDICATES FIXTURES ON PHOTOCELL CONTROL
PA	PUBLIC ADDRESS
PNL	PANEL
S.A.D.	SEE ARCHITECTURAL DRAWINGS
SIG	SIGNAL SYSTEM
SPD	SURGE PROTECTION DEVICE
STC	SIGNAL TERMINAL CABINET
SWBD	SWITCHBOARD
TELE	TELEPHONE
TYP	TYPICAL
UFER	CONCRETE ENCASED CU G.E.C.
UON	UNLESS OTHERWISE NOTED
UG	UNDERGROUND
VAV	VAV BOX, SEE MECHANICAL DIVISION DRAWINGS FOR LOCATIONS. PROVIDE TOGGLE TYPE DISCONNECT SWITCH.
WP	WEATHER PROOF, NEMA 3R. EQUALS "WHILE IN USE" TYPE WHEN APPLIED TO EXTERIOR POWER RECEPTACLES
XFMR	TRANSFORMER

GENERAL ELECTRICAL NOTES

21. THE CONTRACTOR SHALL PAY FOR ALL REQUIRED PERMITS AND INSPECTION FEES.
22. THE CONTRACTOR SHALL VERIFY ALL CRITICAL DIMENSIONS WITH THE ARCHITECTURAL DRAWINGS PRIOR TO ROUGH-IN.
23. ALL EXIT SIGNS SHALL COMPLY WITH THE RELEVANT PORTIONS OF SECTIONS 1008 AND 1013 OF THE CBC.
24. ALL MECHANICAL DIVISION EQUIPMENT LOW VOLTAGE CONTROL WIRING AND RACEWAY SHALL BE PROVIDED AND INSTALLED AS SPECIFIED IN MECHANICAL DIVISION U.O.N.
25. COORDINATE INSTALLATION OF ALL RECESSED LUMINAIRE(S) WITH MECHANICAL DIVISION PRIOR TO INSTALLATION OF HVAC DUCTS AND SPRINKLER HEADS. ENSURE AFTER INSTALLATION OF LUMINAIRE(S) THAT THERE IS NO CONTACT BETWEEN DUCTS AND LUMINAIRE(S) TO AVOID VIBRATION IN LUMINAIRE(S).
26. USE FLEXIBLE CONDUIT FOR ALL MOTOR, TRANSFORMER, RECESSED LUMINAIRE CONNECTIONS, AND CONNECTIONS BETWEEN TWO SEPARATE STRUCTURES AND FOR ALL FINAL CONNECTIONS TO "CRITICAL EQUIPMENT" AS DEFINED IN SPECIFICATIONS. MINIMUM 1/2" DIAMETER, LIQUID TIGHT TYPE USED OUTDOORS AND IN ALL WET LOCATIONS; PROVIDE WITH CODE-SIZE (MINIMUM #12) BARE GROUND WIRE IN ALL FLEXIBLE CONDUIT.
27. PROVIDE A DEDICATED NEUTRAL CONDUCTOR FOR ALL BRANCH CIRCUITS FEEDING OUTLETS AS NOTED ON THE DRAWINGS.
28. FOR FLUSH MOUNTED PANELBOARDS THE CONTRACTOR SHALL STUB A MINIMUM OF FOUR (4) 3/4" CONDUITS FROM THE PANEL UP INTO THE ACCESSIBLE CEILING ABOVE FOR FUTURE CIRCUITS.
29. ALL CONDUIT CONNECTORS TO OUTLET OR JUNCTION BOXES SHALL HAVE INSULATED THROATS (MANUFACTURED AS AN INTEGRAL PART OF THE CONNECTOR). AFTER-MARKET INSERTABLE THROATS ARE NOT ACCEPTABLE.
30. ALL CIRCUITS IN ALL JUNCTION BOXES AND DEVICES SHALL BE CLEARLY IDENTIFIED BY MEANS OF "EZ" NUMBERING TAGS OR EQUIVALENT, TO IDENTIFY THE CIRCUIT NUMBER OR RELAY SUPPLYING THE CONDUCTOR. ALL JUNCTION BOXES SHALL BE LABELED PER SPECIFICATIONS.
31. ALL SURFACE MOUNTED POWER AND SIGNAL BOXES IN FINISHED AREAS SHALL BE "WIREMOLD" TYPE, WITH MATCHING RACEWAYS. SURFACE MOUNTED STEEL JUNCTION BOXES AND/OR EMT ARE NOT ACCEPTABLE.
32. ALL LOCATIONS OF BARE METAL SURFACE MOUNTED CONDUIT, BOXES, PANEL COVERS, AND RELATED FITTINGS OR ACCESSORIES INSTALLED IN FINISHED AREAS (BOTH INTERIOR AND EXTERIOR) SHALL BE FINISH PAINTED TO MATCH THE SURFACE TO WHICH THEY ARE MOUNTED TO (AFTER INSTALLATION). PAINTING SHALL INCLUDE DIFFERENT COLORS AS REQUIRED TO MATCH EXISTING STRIPING OR OTHER BUILDING FEATURES TO WHICH THE EQUIPMENT IS ATTACHED AND VISIBLE. VERIFY EXACT JUNCTION BOX LOCATION(S) AND ROUTING OF EXPOSED RACEWAYS WITH THE ARCHITECT PRIOR TO ROUGH-IN.
33. PROVIDE A BLANK COVER PLATE (COLOR TO MATCH ADJACENT DEVICES OR AS SPECIFICALLY CALLED FOR IN SPECIFICATIONS) FOR ALL JUNCTION BOXES (NEW AND EXISTING) ON THE PROJECT WHEN NO DEVICE IS INSTALLED.
34. FOR OUTDOOR 15 AND 20-AMPERE, 125 AND 250-VOLT RECEPTACLES: RECEPTACLES LOCATED IN "WET" LOCATIONS SHALL HAVE "IN-USE" TYPE WEATHERPROOF COVER PLATES PROVIDED AND INSTALLED; RECEPTACLES LOCATED IN "DAMP" LOCATIONS SHALL HAVE "IN-USE" TYPE WEATHERPROOF COVER PLATES IN LOCATIONS DEEMED TO BE "IN-USE" WITH CORD AND PLUG ATTACHED.
35. TWO OR THREE DIFFERENT PHASES SUPPLIED BY A 3-PHASE PANEL MAY SHARE A SINGLE NEUTRAL ONLY IF CIRCUIT POSITIONS ARE ADJACENT IN THE PANEL. PROVIDE COMMON HANDLE-TIE ON BREAKERS FOR MULTI-WIRE BRANCH CIRCUITS, WITH COMMON NEUTRAL, PER NEC REQUIREMENTS.

GENERAL ELECTRICAL NOTES

1. PRIOR TO BID THE CONTRACTOR SHALL VISIT THE SITE TO ADEQUATELY DETERMINE ALL PRE-EXISTING CONDITIONS. BY THE ACT OF SUBMITTING A BID, THE CONTRACTOR WILL BE DEEMED TO HAVE COMPLIED WITH THE FOREGOING, TO HAVE ACCEPTED SUCH CONDITIONS, AND TO HAVE MADE ALLOWANCES THEREFORE IN PREPARING THE BID.
2. PROVIDE PARITY SIZED GREEN GROUND WIRE IN ALL POWER CONDUITS, BRANCH CIRCUITS (LIGHTING & POWER) AND HOMERUNS. PROVIDE ADDITIONAL ISOLATED GROUND, GREEN WITH YELLOW STRIPE, TO ALL ISOLATED GROUND RECEPTACLES.
3. PROVIDE PULLROPE IN ALL EMPTY CONDUITS THROUGHOUT THE PROJECT.
4. REFER TO ARCHITECTURAL PLANS AND ELEVATIONS FOR EXACT LOCATION & CONNECTION REQUIREMENTS OF ALL LUMINAIRE(S) AND ALL OUTLET, SWITCH, AND ELECTRICAL RELATED DEVICE MOUNTING HEIGHTS AND LOCATIONS. COORDINATE LOCATIONS OF ALL LUMINAIRE(S) AND JUNCTION BOXES WITH MECHANICAL DIVISION PRIOR TO ROUGH-IN. COORDINATE LOCATIONS OF ELECTRICAL DEVICES WITH FURNITURE PLANS PRIOR TO ROUGH-IN.
5. REFER TO MECHANICAL PLANS FOR EXACT LOCATION(S) OF ALL MECHANICAL EQUIPMENT, AND CONFIRM EXACT CONNECTION REQUIREMENTS OF ALL MECHANICAL EQUIPMENT WITH MECHANICAL DIVISION, PRIOR TO ROUGH-IN. VERIFY EXACT REQUIREMENTS FOR VOLTAGE, PHASE, HORSE-POWER, OR KVA RATINGS, OF ALL MECHANICAL DIVISION EQUIPMENT REQUIRING ELECTRICAL CONNECTION.
6. VERIFY EXACT CONNECTION REQUIREMENTS, OUTLET TYPE(S), MOUNTING HEIGHT(S) AND LOCATION(S) OF ALL OWNER-SUPPLIED EQUIPMENT, AND ALL EQUIPMENT PROVIDED UNDER OTHER SECTIONS OF THE SPECIFICATIONS, PRIOR TO ROUGH-IN. REFER TO ARCHITECTURAL DRAWINGS FOR EQUIPMENT LOCATIONS.
7. COORDINATE TRENCHING WITH OWNER AND OTHER TRADES BEFORE BEGINNING WORK.
8. ALL CONDUIT PENETRATIONS THROUGH FIRE-RATED WALLS AND FLOORS SHALL BE SEALED AND EQUIPPED WITH U.L. LISTED FIRE PENETRATION ASSEMBLIES TO MAINTAIN FIRE SEPARATION RATING.
9. DO NOT INSTALL ANY OUTLETS BACK TO BACK IN STUD WALLS OR DE-MOUNTABLE PARTITIONS.
10. THE CONTRACTOR SHALL VERIFY ALL CEILING TYPES BEFORE ORDERING OF LUMINAIRE(S). ALSO VERIFY THAT ALL FEATURES CALLED FOR IN LUMINAIRE DESCRIPTIONS ON THE LUMINAIRE SCHEDULE ARE INCLUDED WITH CATALOG NUMBERS LISTED ON THE LUMINAIRE SCHEDULE WHEN LUMINAIRE ORDERS ARE PLACED, AND ARE INCLUDED AS PART OF THE LIGHTING SUBMITTALS FOR THIS PROJECT. IF A DISCREPANCY EXISTS, CONTACT THE ARCHITECT AND ELECTRICAL ENGINEER FOR CLARIFICATION PRIOR TO BID.
11. CIRCUITRY AND CONDUIT ROUTING SHOWN ON THE PLANS IS DIAGRAMMATIC ONLY. THIS CONTRACTOR IS RESPONSIBLE FOR BECOMING COMPLETELY FAMILIAR WITH THE ARCHITECTURAL AND STRUCTURAL CONDITIONS AND LIMITATIONS IN THE BUILDING AND TO PROVIDE ALL LABOR, TOOLS AND MATERIALS REQUIRED TO PRODUCE A COMPLETELY CONCEALED INSTALLATION WHEREVER INDICATED ON THE PLANS.
12. MAINTAIN "AS-BUILT" RECORDS AT ALL TIMES, SHOWING EXACT LOCATION OF ALL UNDERGROUND AND/OR CONCEALED CONDUITS AND SERVICES INSTALLED UNDER THIS CONTRACT, INCLUDING CIRCUIT IDENTIFICATION WHERE APPLICABLE. PROVIDE OWNER WITH "AS-BUILT" DOCUMENTS AS INDICATED IN THE SPECIFICATIONS, AND/OR CALLED FOR IN THE SPECIFICATIONS.
13. DRAWINGS INDICATE THE LOCATION(S) OF DEVICES, LUMINAIRE(S) AND EQUIPMENT, AND THE CIRCUIT NUMBER AND PANEL DESIGNATED TO SUPPLY THEM. THE CONTRACTOR SHALL BE RESPONSIBLE FOR COMPLETELY CONNECTING ALL ELECTRICAL DEVICES TO CIRCUITS INDICATED ON THE DRAWINGS.
14. UNLESS OTHERWISE NOTED, ALL WORK SHOWN ON DRAWINGS IS NEW AND TO BE PROVIDED AND INSTALLED COMPLETE UNDER THIS CONTRACT.
15. ALL EQUIPMENT GROUNDING SHALL CONFORM TO ARTICLE 250 OF THE NATIONAL ELECTRICAL CODE, LATEST EDITION.
16. ALL EXTERIOR CONDUIT ABOVE GRADE, INCLUDING ALL ROOF MOUNTED CONDUIT, SHALL BE GALVANIZED RIGID STEEL. COAT ALL EXPOSED THREADS WITH GALVANIZING PAINT. PAINT ALL SURFACE MOUNTED RACEWAYS AND PULLBOXES TO MATCH SURROUNDING CONDITIONS, AS DIRECTED BY THE ARCHITECT.
17. ALL ELECTRICAL WORK SHALL BE CARRIED OUT IN ACCORDANCE WITH THE LATEST EDITION OF THE N.E.C., AS WELL AS STATE, AND LOCAL CODES AND REQUIREMENTS.
18. ALL CONDUIT SHALL BE CONCEALED, UNLESS OTHERWISE NOTED.
19. THE CONTRACTOR SHALL BE RESPONSIBLE TO VERIFY THE AVAILABLE SHORT CIRCUIT CURRENT AT THE MAIN SWITCHBOARD INCOMING TERMINALS WITH THE UTILITY COMPANY, AND TO VERIFY THAT ALL POWER AND SIGNAL SERVICE PROVISIONS, INCLUDING CONCRETE EQUIPMENT PADS, CONDUITS, PULLBOXES AND CLEARANCES, MEET THE UTILITY COMPANY'S REQUIREMENTS, PRIOR TO INSTALLATION.
20. EQUIPMENT OVERLOADS AND FUSES SHALL BE PROVIDED AND INSTALLED AS PER NAME PLATE ON THE EQUIPMENT ACTUALLY PROVIDED.

SHEET INDEX

E-001	GENERAL NOTES, LIST OF DRAWINGS
E-002	ELECTRICAL SYMBOLS LIST
E-003	LUMINAIRE SCHEDULE
E-101	SITE PLAN ELECTRICAL
E-102	PARTIAL SITE PLAN
E-103	PARTIAL SITE PLAN - DEMO
E-104	SITE PLAN - LIGHTING
E-201	FLOOR PLAN LIGHTING - PHASE 1
E-202	FLOOR PLAN LIGHTING - PHASE 2
E-301	FLOOR PLAN POWER & SIGNAL - PHASE 1
E-302	FLOOR PLAN POWER & SIGNAL - PHASE 2
E-303	FLOOR PLANS MP CONNECTIONS - PHASE 1
E-304	FLOOR PLANS MP CONNECTIONS - PHASE 2
E-305	ROOF PLAN PV - PHASE 1
E-501	SINGLE LINE DIAGRAMS
E-502	SINGLE LINE DIAGRAMS
E-503	SINGLE LINE DIAGRAMS- ENERGY STORAGE
E-504	PLACARDS & DATASHEETS
E-505	SINGLE LINE DIAGRAMS
E-601	SCHEDULES
E-701	DETAILS
E-702	DETAILS
E-703	DETAILS
E-704	DETAILS
E-901	DATASHEETS
E-902	DATASHEETS
FE-001	FIRE ALARM EQUIPMENT LIST, GENERAL NOTES & DETAILS
FE-101	SITE PLAN - FIRE ALARM
FE-301	FLOOR PLAN FIRE ALARM - PHASE 1
FE-302	FLOOR PLAN FIRE ALARM - PHASE 2
FE-501	RISER DIAGRAM - FIRE ALARM

AGENCY APPROVAL STAMP:

IDENTIFICATION STAMP
DIV. OF THE STATE ARCHITECT
APP: 01-120890 INC:
REVIEWED FOR
SS ☑ FLS ☑ ACS ☑
DATE: 10/25/2023

TLCDARCHITECTURE
520 Third St. #250
Santa Rosa, CA 95401
o: 707.525.5600
f: 707.525.5616
tlcd.com

CONSULTANT:

O'MAHONY & MYER
ELECTRICAL ENGINEERING & LIGHTING DESIGN
4340 REDWOOD HWY., SUITE 245
SAN RAFAEL, CALIFORNIA 94903
(415) 492-0420/FAX (415) 479-9662

STAMP:

REGISTERED PROFESSIONAL ENGINEER
PIETER J. COLENBRANDER
No.E14738
Exp. 6/25
ELECTRICAL
STATE OF CALIFORNIA

REVISIONS:

Number	Date	Description

NAPA VALLEY COLLEGE WINE EDUCATION CENTER

2277 NAPA VALLEJO HWY
NAPA, CA 94558

NAPA VALLEY COLLEGE

DSA APPLICATION NUMBER:
01-120890

TLCD PROJECT NUMBER:
21062.00

DATE:
AUGUST 30, 2023

© THESE DRAWINGS ARE INSTRUMENTS OF SERVICE AND ARE THE SOLE PROPERTY OF TLCD ARCHITECTURE. ANY USE WITHOUT WRITTEN CONSENT IS PROHIBITED.

GENERAL NOTES, LIST OF DRAWINGS

E-001

30 x 42"
10/17/2023 1:06:08 PM

NAPA VALLEY COLLEGE WINE EDUCATION CENTER - 222020 R23

ELECTRICAL SYMBOLS LIST

- DC — SECURITY SYSTEM DOOR CONTACT. PROVIDE 1/2" C.O. ROUGH-IN FROM NEAREST ACCESSIBLE CEILING AREA, TO DOOR FRAMING. PROVIDE 1" C.O. WITHIN ALL NON-ACCESSIBLE AREAS FOR WIRING AND DEVICE BY OTHERS.
- M — SECURITY SYSTEM CEILING MOUNT 360° MOTION DETECTOR. PROVIDE 1" C.O. WITHIN ALL NON-ACCESSIBLE AREAS FOR WIRING, DEVICE AND MOUNT, BY OTHERS
- GB — SECURITY SYSTEM CEILING MOUNT GLASS BREAK DETECTOR. PROVIDE 1" C.O. WITHIN ALL NON-ACCESSIBLE AREAS FOR WIRING, DEVICE AND MOUNT, BY OTHERS
- K — WALL MOUNTED SECURITY SYSTEM KEYPAD, UP 48" TO TOP OF BOX. PROVIDE 3/4" STUB-UP FROM WALL MOUNT LOCATION TO ACCESSIBLE CEILING SPACES, AND PROVIDE 1" C.O. WITHIN ALL NON-ACCESSIBLE AREAS FOR WIRING AND DEVICE BY OTHERS.
- 1 — PROJECT NUMBERED NOTE, OR SHEET NUMBERED, AS NOTED ON PLAN.
- COPPER GROUND ROD, 10' L x 3/4"ø, SEE SPECS
- 100A 3P — CIRCUIT BREAKER, INDICATES 100 AMP, 3 POLE
- M — UTILITY METER
- CONDUCTOR LANDING LUGS
- CONDUIT TURN DOWN
- CONDUIT TURN UP
- 2 — CONTINUATION
- 3 — CONDUIT STUB
- 4004N — ELECTRICAL FEEDER TAG, PER COPPER FEEDER SCHEDULE
- F 1 — MECHANICAL EQUIPMENT DESIGNATION, REFER TO MECHANICAL PLANS.
- PNL LA — ELECTRICAL EQUIPMENT TAG: EQUIPMENT PREFIX "PNL", "DIP", "SWBD", "XFMR", "FA", "IDF" EQUIPMENT NAME
- 1/E-001 - — DETAIL OR SHEET REFERENCE CALLOUT. INDICATES DETAIL 1, SHEET E-0.1. WHEN ADJACENT EQUIPMENT, APPLIES TO EQUIPMENT IDENTIFIED ONLY.
- 1/E-001 TYP — DETAIL OR SHEET REFERENCE CALLOUT. INDICATES DETAIL 1, SHEET E-0.1. WHEN ADJACENT EQUIPMENT, APPLIES TO TYPICAL EQUIPMENT SERIES.

BRANCH CIRCUIT NOMENCLATURE

EXAMPLES:

LA1-3	1-POLE BRANCH CIRCUIT TO CB
LA1-1,3,5	1-POLE BRANCH CIRCUIT FOR MULTI CIRCUIT HOMERUNS TO SEPARATE CB'S.
LA1-[1,3]	2-POLE BRANCH CIRCUIT TO COMMON CB
LA1-[1,3,5]	3-POLE BRANCH CIRCUIT TO COMMON CB

ELECTRICAL SYMBOLS LIST

- MAIN SWITCHBOARD, DISTRIBUTION PANEL, OR MOTOR CONTROL CENTER
- SURFACE MOUNTED PANELBOARD OR EQUIPMENT AS NOTED ON DRAWINGS. 6' - 6" TO TOP
- FLUSH MOUNTED PANELBOARD OR EQUIPMENT AS NOTED ON DRAWINGS. 6' - 6" TO TOP.
- PAD MOUNTED UTILITY TRANSFORMER, PER UTILITY CO. REQUIREMENTS.
- CONDUIT AND WIRE CONCEALED IN CEILING OR WALL
- CONDUIT AND WIRE UNDERGROUND, OR CONCEALED UNDER SLAB
- CONDUIT AND WIRE RUN EXPOSED, PAINTED TO MATCH ALL ADJACENT FINISHES WITHIN FINISHED SPACES
- HOMERUN TO PANELBOARD OR TERMINAL BOARD, AS NOTED ON PLANS
- CROSSMARKS INDICATE QUANTITY OF #12 CONDUCTORS PLUS PARITY SIZED GROUND CONDUCTOR. NO HASHMARKS INDICATES (2) #12 PLUS PARITY SIZED GROUND CONDUCTOR.
  - GROUND WIRE
- (#10) — WIRE SIZE 10 AWG FOR ALL CONDUCTORS, INCLUDING GROUND WIRE THROUGHOUT THE COMPLETE CIRCUIT
- 20A 3PG 125V DUPLEX RECEPTACLE, UP 18" U.O.N. - 'WP' INDICATES WEATHERPROOF.
- 20A 3PG 125V DOUBLE DUPLEX RECEPTACLE, UP 18" U.O.N.
- 20A 3PG 125V DUPLEX / DOUBLE DUPLEX RECEPTACLE, MOUNTED ABOVE COUNTER. WHERE CASEWORK WITH SPLASH GUARD OCCURS, INSTALL RECEPTACLE HORIZONTAL AT +3 1/4" FROM TOP OF DEVICE TO TOP OF COUNTER (OR 31 1/4" A.F.F.).
- 20A 3PG 125V DUPLEX / DOUBLE DUPLEX CONTROLLED AND IDENTIFIED (SPLIT-WIRED) RECEPTACLE, WITH ONE HALF OF RECEPTACLE WIRED THROUGH LOCAL PLUG-LOAD CONTROLLER, UP 18" U.O.N.
- 20A 3PG 125V DUPLEX RECEPTACLE, FLUSH CEILING MOUNT.
- SURFACE MOUNTED WIREMOLD RACEWAY WITH RECEPTACLES AS INDICATED ON PLANS
- SURFACE MOUNTED WIREMOLD RACEWAY RISER
- DATA OUTLET, WALL MOUNTED, UP 18" U.O.N.
- DATA OUTLET, WALL MOUNTED, MOUNTED ABOVE COUNTER.
- DATA OUTLET, FLUSH CEILING MOUNT.
  - 'AP' - ACCESS POINT
  - 'P' - PROJECTOR
- FLUSH WALL MOUNTED INDOOR PUBLIC ADDRESS SPEAKER & SIGNAL SYSTEM CLOCK, UP 96" U.O.N.
- FLUSH WALL MOUNTED INDOOR PUBLIC ADDRESS SPEAKER, UP 96" U.O.N. - 'WP' INDICATES WEATHERPROOF
- FLUSH WALL MOUNTED SIGNAL SYSTEM CLOCK, UP +96" U.O.N.
- FLOOR BOX ASSEMBLY, IN-SLAB. DOUBLE DUPLEX RECEPTACLE, AND DATA OUTLET.
- FIRE RATED POKE THRU ASSEMBLY FLOOR BOX
- $m — LINE VOLTAGE MOTOR RATED SWITCH INSTALLED AT EQUIPMENT SHOWN
- 2 — MOTOR DISCONNECT SWITCH, HORSEPOWER RATED, FUSED
  - PLAN SPECIFIC DIMENSIONED SYMBOL, BASED ON INDUSTRY STANDARD FRAME SIZES
  - DIAGRAMAMTIC SYMBOL
- 2 — MOTOR DISCONNECT SWITCH, HORSEPOWER RATED, NON FUSED
  - PLAN SPECIFIC DIMENSIONED SYMBOL, BASED ON INDUSTRY STANDARD FRAME SIZES
  - DIAGRAMAMTIC SYMBOL
- VFD — VARIABLE FREQUENCY DRIVE, FURNISHED BY MECHANICAL, INSTALLED AND CONNECTED COMPLETE BY ELECTRICAL.

ELECTRICAL SYMBOLS LIST

- $a — LINE VOLTAGE SINGLE POLE TOGGLE SWITCH, LETTER ADJACENT INDICATES RESPECTIVE ZONE CONTROLLED, UP 48" U.O.N.
- $2 — LINE VOLTAGE TWO POLE TOGGLE SWITCH, UP 48" U.O.N.
- $3 — LINE VOLTAGE THREE-WAY TOGGLE SWITCH, UP 48" U.O.N.
- $k — LINE VOLTAGE KEY OPERATED TOGGLE SWITCH
- $m — LINE VOLTAGE MOTOR RATED TOGGLE SWITCH INSTALLED AT EQPT SHOWN
- $p — LINE VOLTAGE TOGGLE SWITCH WITH PILOT LIGHT, LIGHT IS ON WHEN CIRCUIT IS CLOSED, UP 48" U.O.N.
- S ab — LOW VOLTAGE MOMENTARY CONTACT SWITCH - SEE LOW VOLTAGE RELAY SCHEDULE, LOWER CASE LETTER ADJACENT INDICATES RESPECTIVE ZONE CONTROLLED, UP 48" U.O.N.
- kS ab — LOW VOLTAGE KEYED MOMENTARY CONTACT SWITCH - SEE LOW VOLTAGE RELAY SCHEDULE, LOWER CASE LETTER ADJACENT INDICATES RESPECTIVE ZONE CONTROLLED, UP 48" U.O.N.
- aOSb — WALL MOUNTED SWITCH TYPE INFRARED OCCUPANCY SENSOR; UP 48" U.O.N.; SINGLE OR DUAL AS NOTED BY LETTERS ADJACENT. SET TO FIXED 20 MINUTE TIME DELAY AND MAX SENSITIVITY
- aDSb — WALL MOUNTED DUAL TECHNOLOGY OCCUPANCY SENSOR; UP 48" U.O.N.; SINGLE OR DUAL AS NOTED BY LETTERS ADJACENT. SET TO FIXED 20 MINUTE TIME DELAY AND MAX SENSITIVITY
- OSD — WALL MOUNTED DIGITAL DUAL TECHNOLOGY DIMMING OCCUPANCY SENSOR SWITCH; UP 48" U.O.N.
- S a — WALL MOUNTED DIGITAL SWITCH, UP 48" U.O.N.; LOWER CASE LETTER ADJACENT INDICATES RESPECTIVE ZONE CONTROLLED
- 2 D a,b — WALL MOUNTED SINGLE OR MULTI-ZONE DIGITAL DIMMER SWITCH, UP 48" U.O.N.; LOWER CASE LETTERS ADJACENT INDICATE RESPECTIVE ZONES TO BE SIMULTANEOUSLY MANUALLY CONTROLLED; NUMERAL DESIGNATES NUMBER OF ZONES ASSIGNED TO THE DEVICE
- CEILING MOUNTED DUAL TECHNOLOGY DIGITAL OCCUPANCY SENSOR
- WALL MOUNTED DUAL TECHNOLOGY DIGITAL OCCUPANCY SENSOR
- LOW VOLTAGE COLD TEMPERATURE PIR OCCUPANCY SENSOR
- CEILING MOUNTED LINE VOLTAGE DUAL TECHNOLOGY OCCUPANCY SENSOR
- Z3,Z4 P — SINGLE OR MULTI-ZONE SWITCHING OR DIMMING OPEN LOOP DIGITAL DAYLIGHTING SENSOR; NOTATIONS ADJACENT IDENTIFY DAYLIGHT ZONES ASSIGNED TO THE DEVICE. VERIFY EXACT LOCATION PRIOR TO ROUGH-IN
- Z1 P — SINGLE ZONE SWITCHING OR DIMMING CLOSED LOOP DIGITAL DAYLIGHTING SENSOR; NOTATIONS ADJACENT IDENTIFY DAYLIGHT ZONES ASSIGNED TO THE DEVICE. VERIFY EXACT LOCATION PRIOR TO ROUGH-IN
- Z1 P — DAYLIGHT CONTROL PHOTOCELL - BRACKET MOUNTED; NOTATIONS ADJACENT IDENTIFY DAYLIGHT ZONES ASSIGNED TO THE DEVICE. VERIFY EXACT LOCATION PRIOR TO ROUGH-IN
- Z2 — INDICATES DAYLIGHT ZONE CONTROLLED VIA PHOTOCELL
- RC 2 — ROOM CONTROLLER; ADJACENT NUMERAL REFERS TO THE NUMBER OF ZONES TO BE CONTROLLED. VENDOR OR CONTRACTOR TO PROVIDE QUANTITY OF ROOM CONTROLLERS REQUIRED FOR THE NUMBER OF CONTROLLED ZONES.
- PC — PLUG LOAD ROOM CONTROLLER
- NB — NETWORK BRIDGE
- MBR — MASTER WIRELESS BORDER ROUTER & NB - SWITCH IN NETWORK CABINET
- BR 1 — SECONDARY WIRELESS BORDER ROUTER
- IR — ISOLATED RELAY INTERFACE
- EC — EMERGENCY LIGHTING CONTROL MODULE
- P — OCCUPANCY SENSOR POWER PACK MOUNTED IN CONCEALED ACCESSIBLE LOCATION

CALIFORNIA GREEN BUILDING STANDARDS COMPLIANCE

ALL EXTERIOR LUMINAIRES SPECIFIED IN THESE CONTRACT DOCUMENTS COMPLY WITH THE REQUIREMENTS OF THE CALIFORNIA ENERGY CODE AND THE CALIFORNIA GREEN BUILDING STANDARDS CODE, SECTION A5.106.8 LIGHT POLLUTION REDUCTION. EXTERIOR LUMINAIRES COMPLY WITH BACKLIGHT, UPLIGHT, AND GLARE (BUG) RATINGS AS DEFINED IN IESNA TM-15-11 AND BUG RATINGS DO NOT EXCEED THE MAXIMUM ALLOWABLE RATINGS FOR THIS PROJECT.

ELECTRICAL SYMBOLS LIST

ALL SWITCH AND CONTROL MOUNTING HEIGHTS OF 48" SHALL BE TO TOP OF THE DEVICE BOX. ALL RECEPTACLES WITH MOUNTING HEIGHT OF UP TO 18" SHALL BE NO LOWER THAN 15" TO BOTTOM OF THE DEVICE BOX, TYPICAL, U.O.N.

- AA1 — INDICATES LUMINAIRE TYPE, SEE LUMINAIRE SCHEDULE
- RECESSED 2'x2', 2'x4' OR 1'x4' LUMINAIRE, FULLY LENSED
- EM, EM, E, E — INDICATES EMERGENCY LUMINAIRE. SEE ABBREVIATIONS FOR TYPE OF EMERGENCY SOURCE
- SUSPENDED LINEAR LUMINAIRE
- INDICATES AIRCRAFT CABLE SUPPORT POINT (VERIFY WITH MFGR)
- INDICATES COMBINATION AIRCRAFT CABLE/ELECTRICAL FEED POINT (VERIFY WITH MFGR)
- SURFACE CEILING, WALL OR COVE MOUNTED LUMINAIRE
- UNDER CABINET LUMINAIRE
- WALL MOUNTED LUMINAIRE
- RECESSED DOWNLIGHT LUMINAIRE
- POLE ARM-MOUNTED AREA LUMINAIRE
- POST-TOP PEDESTRIAN-SCALE AREA LUMINAIRE; ARROW INDICATES DIRECTION OF LIGHT DISTRIBUTION
- WALL MOUNTED EXIT SIGN, ARROWS AS NOTED ON PLANS. SHADED AREA INDICATES NUMBER OF FACES
- CEILING MOUNTED EXIT SIGN; SHADED AREA INDICATES NUMBER OF FACES

AGENCY APPROVAL STAMP:

IDENTIFICATION STAMP
DIV. OF THE STATE ARCHITECT
APP: 01-120890 INC:
REVIEWED FOR
SS ☑ FLS ☑ ACS ☑
DATE: 10/25/2023

TLCDARCHITECTURE
520 Third St. #250
Santa Rosa, CA 95401
o: 707.525.5600
f: 707.525.5616
tlcd.com

CONSULTANT:

O'MAHONY & MYER
ELECTRICAL ENGINEERING & LIGHTING DESIGN
4340 REDWOOD HWY., SUITE 245
SAN RAFAEL, CALIFORNIA 94903
(415) 492-0420/FAX (415) 479-9662

STAMP:

REGISTERED PROFESSIONAL ENGINEER
PETER A. COLEMAN JR.
No.E14738
Exp. 6/25
ELECTRICAL
STATE OF CALIFORNIA

REVISIONS:

Number	Date	Description

NAPA VALLEY COLLEGE WINE EDUCATION CENTER

2277 NAPA VALLEJO HWY
NAPA, CA 94558

NAPA VALLEY COLLEGE

DSA APPLICATION NUMBER:
01-120890

TLCD PROJECT NUMBER:
21062.00

DATE:
AUGUST 30, 2023

ELECTRICAL SYMBOLS LIST

E-002

© THESE DRAWINGS ARE INSTRUMENTS OF SERVICE AND ARE THE SOLE PROPERTY OF TLCD ARCHITECTURE. ANY USE WITHOUT WRITTEN CONSENT IS PROHIBITED.

30 x 42"
10/17/2023 1:06:11 PM

NAPA VALLEY COLLEGE WINE EDUCATION CENTER - 222020 R23

LUMINAIRE SCHEDULE

TYPE	MOUNTING	DESCRIPTION	MANUFACTURER CATALOG #	LIGHT SOURCE	POWER SUPPLY	VOLTS	INPUT WATTS	REMARKS
AL2	SURFACE	SIMILAR TO 'AL1' EXCEPT NOM. 4' LENGTH. 6 LBS.	WILLIAMS 7SS-4-L30-8-35-WG75-DIM-UNV	3500K LED 80+ CRI 3,071 LM	INTEGRAL ELECTRONIC LED POWER SUPPLY, 0-10V DIMMING	UNV	20W	
AL3	SURFACE	SIMILAR TO 'AL1' EXCEPT NOM. 8' LENGTH. 11 LBS.	WILLIAMS 7SS-8-L60-8-35-WG75-DIM-UNV	3500K LED 80+ CRI 5,814 LM	INTEGRAL ELECTRONIC LED POWER SUPPLY, 0-10V DIMMING	UNV	36W	
AL4	SURFACE	SIMILAR TO 'AL1' EXCEPT NOM. 4' LENGTH AND HIGHER OUTPUT. 6 LBS.	WILLIAMS 7SS-4-L50-8-35-WG75-DIM-UNV	3500K LED 80+ CRI 5,126 LM	INTEGRAL ELECTRONIC LED POWER SUPPLY, 0-10V DIMMING	UNV	33W	
AM1	SURFACE	UNDERCABINET MOUNTED LINEAR LED LUMINAIRE COMPRISED OF SINGLE UNITS WITH TWO END CAPS OR MULTIPLE UNITS WITH QUICK CONNECTS FOR FIELD JOINING CONTINUOUS RUNS; EXTRUDED ALUMINUM HOUSING NOM. 4.5" W X 1.25" D X 24" L; HIGH STRENGTH DR ACRYLIC PRISMATIC LENS; OPAQUE FRONT; 3500K CCT; STANDARD FINISH AS SELECTED BY THE ARCHITECT. 5 LBS.	KENALL AUCLED-S-FINISH-11L35K-24-120	3500K LED 80+ CRI 1,317 LM	INTEGRAL ELECTRONIC LED POWER SUPPLY	120V	11W	
AM2	SURFACE	SIMILAR TO 'AM1' EXCEPT NOM. 48" LENGTH. 8 LBS.	KENALL AUCLED-S-FINISH-20L35K-48-120	3500K LED 80+ CRI 2,003 LM	INTEGRAL ELECTRONIC LED POWER SUPPLY	120V	22W	
BA1	SURFACE	ACCENT SCALE LED AREA LIGHT; FABRICATED ALUMINUM HOUSING; STAMPED SILICONE GASKETING; WET LOCATION LISTED AND IP66 RATED; FLAT FASCIA FORM; HIGH ANGLE FORWARD THROW OPTICS; HOUSING FINISH AND FASCIA PANEL METAL/FINISH AS SELECTED BY THE ARCHITECT. 12 LBS.	ARCHITECTURAL AREA LIGHTING CY1-25-3K8-1-4-UNV-HOUSING FINISH-F-FASCIA PANEL	3000K LED 80+ CRI 2,500 LM	INTEGRAL ELECTRONIC LED POWER SUPPLY, 0-10V DIMMING	UNV	25W	
BA2	SURFACE	SIMILAR TO 'BA1' EXCEPT WITH DIFFUSED OPTICS.	ARCHITECTURAL AREA LIGHTING CY1-25-3K8-1-4D-UNV-HOUSING FINISH-F-FASCIA PANEL	3000K LED 80+ CRI 2,500 LM	INTEGRAL ELECTRONIC LED POWER SUPPLY, 0-10V DIMMING	UNV	25W	
BA3	SURFACE	SIMILAR TO 'BA1' EXCEPT HIGHER OUTPUT	ARCHITECTURAL AREA LIGHTING CY1-25-3K8-1-4-UNV-HOUSING FINISH-F-FASCIA PANEL	3000K LED 80+ CRI 2,500 LM	INTEGRAL ELECTRONIC LED POWER SUPPLY, 0-10V DIMMING	UNV	25W	
BD1	GROUND	STAKE MOUNTED LED FLOOD LIGHT; COPPER-FREE ALUMINUM UNIBODY HOUSING; 360° ROTATIONAL MOUNTING SYSTEM; 45° CAP; LISTED FOR USE IN WET LOCATIONS. 7 LBS.	B-K LIGHTING HU-LED-TR-X114-FL-FINISH-9-A-1-010-MT-TE STAKE: PP-J18-FINISH-B-SF	3000K LED 80+ CRI 3,342 LM	INTEGRAL ELECTRONIC LED POWER SUPPLY	UNV	34W	
BE1	POLE	POLE MOUNTED SINGLE HEAD LED AREA LUMINAIRE; DIE CAST ALUMINUM HOUSING AND LENS FRAME, CLEAR TEMPERED GLASS LENS WITH FULL SILICONE GASKETING AT PERIMETER; TYPE 2 OPTICS; OUTPUT LOWERED BELOW STANDARD TO APPROXIMATELY 35 WATTS; 5 INCH SUPPORT ARM. POLE MOUNTED TO NOMINAL 12' HIGH ROUND STRAIGHT ALUMINUM POLE; SINGLE FUSE AT HAND-HOLE; FINISH TO MATCH CAMPUS STANDARD; WITH ADDITIONAL HANDHOLE AT TOP OF POLE FOR SECURITY CAMERA - SECURITY SYSTEM VENDOR TO REVIEW SHOP DRAWINGS AND CONFIRM EXACT HEIGHT AND LOCATION OF HANDHOLE. LUMINAIRE HEAD: 21 LBS. POLE: 31 LBS.	KIM LUMINAIRE: 1SA-SARA2-27L(MOD 35W}-3K8-2-UNV-CLR-4.00-FINISH POLE: RSA-K-12-40A-1-DRILL PATTERN-FINISH-EHH	3000K LED 80+ CRI 3800 LM	INTEGRAL DRIVER	UNV	35W	
BE2	POLE	SIMILAR TO TYPE 'BE1' EXCEPT TYPE 5 OPTICS; POLE MOUNTED OCCUPANCY SENSOR TO TOGGLE BETWEEN 100% AND 30% OUTPUT; POLE FACTORY DRILLED FOR OCCUPANCY SENSOR, TO SIT 90 DEGREES FROM LUMINAIRE HEAD IN PLAN VIEW, MOUNTED AS HIGH AS POSSIBLE; PHOTOCELL FUNCTION OF SENSOR SHALL BE DISABLED.	KIM LUMINAIRE: 1SA-SARA2-27L-695-3K8-5-UNV-CLR-4.00-FINISH POLE: RSA-K-12-40A-1-DRILL PATTERN-FINISH SENSOR: SCHR-4.00-VOLTAGE-FINISH-(DISABLE PHOTOCELL)	3000K LED 80+ CRI 6000LM	INTEGRAL DRIVER/0-10V DIMMING AT SETPOINTS WITH OCCUPANCY SENSOR	UNV	56W	
BE3	POLE	SIMILAR TO TYPE 'BE1' EXCEPTNO HANDHOLE FOR SECURITY CAMERA.	KIM LUMINAIRE: 1SA-SARA2-27L(MOD 35W}-3K8-2-UNV-CLR-4.00-FINISH POLE: RSA-K-12-40A-1-DRILL PATTERN-FINISH-EHH	3000K LED 80+ CRI 3800 LM	INTEGRAL DRIVER	UNV	35W	
BF1	BOLLARD	LED BOLLARD; EXTRUDED ALUMINUM POST; CAST ALUMINUM REFLECTOR AND TOP; WET LOCATION RATED IP65; NOM. 43" HEIGHT; CONCELAED ANCHOR MOUNTING; STANDARD FINISH AS SELECTED BY THE ARCHITECT. 23 LBS.	LOUIS POULSEN FLINDT-43.3-FINISH-ANCHORAGE-15W LED/3000K-591-UNV	3000K LED 80+ CRI 591 LM	INTEGRAL ELECTRONIC LED POWER SUPPLY	UNV	15W	
BG1	SURFACE	LOW PROFILE WALL PACK. 2 LBS.	RAB BRISK-S11L-730-FINISH	3000K LED 70+ CRI 1100 LM	INTEGRAL ELECTRONIC LED POWER SUPPLY	UNV	9W	
BH1	POLE	LARGER COMPANION TO 'BE-SERIES'; POLE MOUNTED SINGLE HEAD LED AREA LUMINAIRE; DIE CAST ALUMINUM HOUSING AND LENS FRAME, CLEAR TEMPERED GLASS LENS WITH FULL SILICONE GASKETING AT PERIMETER; TYPE 4 OPTICS. POLE MOUNTED TO NOMINAL 20' HIGH ROUND STRAIGHT ALUMINUM POLE; SINGLE FUSE AT HAND-HOLE; FINISH TO MATCH CAMPUS STANDARD. POLE MOUNTED OCCUPANCY SENSOR TO TOGGLE BETWEEN 100% AND 30% OUTPUT; POLE FACTORY DRILLED FOR OCCUPANCY SENSOR, TO SIT BELOW LUMINAIRE HEAD IN PLAN VIEW, MOUNTED AS HIGH AS POSSIBLE; PHOTOCELL FUNCTION OF SENSOR SHALL BE DISABLED. LUMINAIRE HEAD: LBS.	KIM LUMINAIRE: 1A-ARA2-54L-560-3K8-4-UNV-CLR-4.00-UNV-FINISH POLE: RSA-K-20-40A-1-DRILL PATTERN-FINISH SENSOR: SCHR-4.00-VOLTAGE-FINISH-(DISABLE PHOTOCELL)	3000K LED 80+ CRI 11,000 LM	INTEGRAL DRIVER/0-10V DIMMING AT SETPOINTS WITH OCCUPANCY SENSOR	UNV	89W	
EX1	EXIT SIGN	LOW PROFILE EDGE-LIT LED EXIT SIGN; EXTRUDED ALUMINUM HOUSING; INJECTION-MOLDED GRAY ENDCAPS AND CANOPY; UNIVERSAL MOUNTING KIT; SINGLE OR DOUBLE FACED WITH FIELD-SELECTABLE DIRECTIONAL CHEVRONS. 3.2 LBS.	EVENLITE TEXZ-AC-G-URC	NA	NA	UNV	3W	

END OF LUMINAIRE SCHEDULE

LUMINAIRE SCHEDULE

TYPE	MOUNTING	DESCRIPTION	MANUFACTURER CATALOG #	LIGHT SOURCE	POWER SUPPLY	VOLTS	INPUT WATTS	REMARKS
AA1E	SUSPENDED	AIRCRAFT CABLE SUSPENDED LINEAR LED LUMINAIRE; EXTRUDED ALUMINUM HOUSING; 1000 LUMENS/FT AND PMMA LENS WITH LAMBERTIAN OPTIC FOR DIRECT OUTPUT; 350 LUMENS/FT AND WIDESPREAD CLEAR ACRYLIC LENS FOR INDIRECT OUTPUT. NOM. 34' LENGTH X 3" HIGH X 2.5" WIDE. TWO 2' LONG SECTIONS AT EITHER END OF LUMINAIRE WIRED FOR SEPERATE FEED FROM INVERTER FOR EMERGENCY POWER. STANDARD FINISH AND ENDCAP DESIGN AS SELECTED BY ARCHITECT. 58 LBS.	LUMENWERX UBIP-DI-HLO-WIO2-SW-80-350-1000-35-34FT-UNV-D1-1C-EC(2 X 24"L - SEE PLANS)ACC(3NPC-36-W-PCW-SEM)-FINISH-ENDCAPS	3500K LED 80+ CRI 1350 LM/FT	0-10V DIMMING TO 1%	UNV	337W	ACT CEILING, NORMAL CRI. SEE PLANS FOR LOCATIONS OF EMERGENCY SECTIONS.
AA2E	SUSPENDED	SIMILAR TO 'AA1' EXCEPT NOM. 28' LENGTH; ADDITIONAL 'FULL SPECTRUM' PHOSPHOR COATING FOR OUTSTANDING COLOR FIDELITY AND SATURATION; DIODES DRIVEN AT HIGHER MILIAMPERAGE/WATTAGE TO ACHIEVE EQUAL LUMEN OUTPUT TO STANDARD CRI. 46 LBS.	LUMENWERX UBIP-DI-HLO-WIO2-FS-80-350-1000-35-28FT-UNV-D1-1C-EC(2 X 24"L - SEE PLANS)-ACC(3NPC-36-W-PCW-SEM)-FINISH-ENDCAPS	3500K LED 97+ CRI 1350LM	0-10V DIMMING TO 1%	UNV	445W	ACT CEILING, FULL SPECTRUM. SEE PLANS FOR LOCATIONS OF EMERGENCY SECTIONS.
AA3E	SUSPENDED	SIMILAR TO 'AA1' EXCEPT 1000 LUMENS AND STANDARD MATTE WHITE PARABOLIC LOUVERS FOR DIRECT OUTPUT; SLOPED CEILIGN MOUNTING KIT. CANOPY FINISH AND CORD COLOR AS SELECTED BY ARCHITECT FOR USE AT WOOD SLAT CEILING LOCATION. 56 LBS.	LUMENWERX UBIP-DI-MWPL-WIO2-SW-80-1000-1000-35-34FT-UNV-D1-1C-EC(2 X 24"L - SEE PLANS)-ACC(3NPC-72-CANOPY FINISH-POWER CORD COLOR-SEM-SLC)-FINISH-ENDCAPS	3500K LED 80+ CRI 2000 LM/FT	0-10V DIMMING TO 1%	UNV	531W	WOOD CEILING, NORMAL CRI. SEE PLANS FOR LOCATIONS OF EMERGENCY SECTIONS.
AA4E	SUSPENDED	SIMILAR TO 'AA1' EXCEPT NOM. 28' LENGTH; ADDITIONAL 'FULL SPECTRUM' PHOSPHOR COATING FOR OUTSTANDING COLOR FIDELITY AND SATURATION; DIODES DRIVEN AT HIGHER MILIAMPERAGE/WATTAGE TO ACHIEVE EQUAL LUMEN OUTPUT TO STANDARD CRI; 1000 LUMENS AND STANDARD MATTE WHITE PARABOLIC LOUVERS FOR DIRECT OUTPUT; SLOPED CEILIGN MOUNTING KIT. CANOPY FINISH AND CORD COLOR AS SELECTED BY ARCHITECT FOR USE AT WOOD SLAT CEILING LOCATION. 46 LBS.	LUMENWERX UBIP-DI-MWPL-WIO2-FS-80-1000-1000-35-28FT-UNV-D1-1C-EC(2 X 24"L - SEE PLANS)--ACC(3NPC-36-W-PCW-SEM)-FINISH-ENDCAPS	3500K LED 97+ CRI 2000LM	0-10V DIMMING TO 1%	UNV	700W	WOOD CEILING, FULL SPECTRUM. SEE PLANS FOR LOCATIONS OF EMERGENCY SECTIONS.
AB1	RECESSED	RECESSED 2'X2' L.E.D. FLAT PANEL LUMINAIRE; 5/16" PANEL DEPTH; 2" MAX DEPTH AT WIRING COMPARTMENT; ALUMINUM BEZEL; CEILING RETENTION CLIPS. 9.4 LBS.	METALUX 22FP32-35-C-FPEQ	3500K LED 80+ CRI 3,307 LM	INTEGRAL ELECTRONIC LED POWER SUPPLY, 0-10V DIMMING	120V	29W	
AB2	RECESSED	SIMILAR TO TYPE 'AB1' ESCEPT HIGHER OUTPUT	METALUX 22FP42-35-C-FPEQ	3500K LED 80+ CRI 3,307 LM	INTEGRAL ELECTRONIC LED POWER SUPPLY, 0-10V DIMMING	120V	38W	
AC1	RECESSED	4.5" ROUND ADJUSTABLE DOWNLIGHT; 20 GA. STEEL HOUSING WITH THRU-WIRE J-BOX; BLACK FINISH MILLWORK COLLAR AND TRIM; TOTAL INTERNAL REFLECTION OPTICS AND INTEGRAL DRIVER; 50° BEAM SPREAD SOLITE LENS; SUITABLE FOR MOUNTING AT COVERED WET LOCATION; SUITABLE FOR CONTACT WITH INSULATION. 16 LBS.	USAI LIGHTING B4RAM-25-24C3-30KH-T50-S-BL-BL-NCIC-UNV-D6E	3000K LED 90+ CRI 1700 LM	0-10V DIMMING TO 1%	UNV	24W	
AD1	RECESSED	3" ROUND DOWNLIGHT; ULTRA LOW-PROFILE, 2" DEEP 20 GA. STEEL HOUSING WITH THRU-WIRE J-BOX; INTEGRAL DRIVER. 25° BEAM; SPACKLE FLANGE. HOUSING: 4 LBS.	USAI LIGHTING B3RD-L-09X3-30KH-25-S-BEVEL FINISH-TRIM FINISH-FT-UNV-D6E	3000K LED 90+ CRI 650 LM	0-10V DIMMING TO 1%	UNV	9W	
AE1	SURFACE	SURFACE MOUNTED LINEAR LUMINAIRE WITH WRAP-AROUND HIGH STRENGTH DR ACRYLIC DIFFUSER; NOM. 3"W x 3"H x 10'L EXTRUDED ALUMINUM HOUSING; ALUMINUM END CAPS; MEDIUM OUTPUT; STANDARD FINISH AS SELECTED BY THE ARCHITECT.	PRIMUS LIGHTING LN3-SQL-M-35K-UNV-SM-AEB-FINISH-10	3500K LED 80+ CRI 920 LM/FT	INTEGRAL ELECTRONIC LED POWER SUPPLY, 0-10V DIMMING	UNV	65W	
AE2	SURFACE	SIMILAR TO 'AE1' EXCEPT NOM. 6'L.	PRIMUS LIGHTING LN3-SQL-M-35K-UNV-SM-AEB-FINISH-6	3500K LED 80+ CRI 920 LM/FT	INTEGRAL ELECTRONIC LED POWER SUPPLY, 0-10V DIMMING	UNV	39W	
AE3	SURFACE	SIMILAR TO 'AE1' EXCEPT NOM. 8'L AND LOW OUTPUT.	PRIMUS LIGHTING LN3-SQL-L-35K-UNV-SM-AEB-FINISH-8	3500K LED 80+ CRI 535 LM/FT	INTEGRAL ELECTRONIC LED POWER SUPPLY, 0-10V DIMMING	UNV	28W	
AF1	RECESSED	NON-ADJUSTABLE COMPANION TO TYPE 'AC1'. 4.5" ROUND DOWNLIGHT; LOW PROFILE, 4" DEEP 20 GA. STEEL HOUSING WITH THRU-WIRE J-BOX; BLACK FINISH MILLWORK COLLAR AND TRIM; INTEGRAL DRIVER. 90° BEAM; SUITABLE FOR MOUNTING AT COVERED WET LOCATION; SUITABLE FOR CONTACT WITH INSULATION. 8 LBS.	USAI LIGHTING B4RDM-12C3-30KH-90-S-BL-BL-FTIC-UNV-D6E	3000K LED 90+ CRI 850 LM	0-10V DIMMING TO 1%	UNV	12W	
AF2	RECESSED	SIMILAR TO TYPE 'AF1' EXCEPT WITH STANDARD FLANGE AND WHITE FINISH FOR MOUNTING AT PLASTER SOFFIT.	USAI LIGHTING B4RDF-12C3-30KH-90-S-WH-WH-FTIC-UNV-D6E	3000K LED 90+ CRI 850 LM	0-10V DIMMING TO 1%	UNV	12W	
AG1	SURFACE	WALL MOUNTED UPLIGHT WITH FORWARD THROW OPTICS FOR CEILING ILLUMINATION; DIE-CAST MARINE GRADE ALUMINUM HOUSING; CLEAR SAFETY GLASS LENS; ANODIZED ALUMINUM REFLECTOR; SILICONE GASKET. SUITABLE FOR WET LOCATIONS. STANDARD FINISH AS SELECTED BY ARCHITECT. 5.8 LBS.	BEGA 24 362-K3	3000K LED 80+ CRI 3,727 LM	INTEGRAL ELECTRONIC LED POWER SUPPLY, 0-10V DIMMING	UNV	38W	
AH1	SUSPENDED	SUSPENDED LED DECORATIVE PENDANT; DIE-CAST AND EXTRUDED ALUMINUM HOUSING WITH SHIELDED DIRECT DISTRIBUTION; 7" TALL X 5" WIDE CYLINDER; STANDARD FINISH AS SELECTED BY ARCHITECT.	LIGHTOLIER C4-P-DL-15-90-30-M-Z10/D2O-BK-B/CA-CK-10-BK	3000K LED 90+ CRI 1500 LM	0-10V DIMMING TO OFF	UNV	16W	
AJ1	RECESSED	SHALLOW PLENUM; SEALED LED 2X2 FLAT PANEL LED TROFFER; NSF CERTIFIED FOR USE IN COMMERCIAL FOOD PREPARATION AREAS; 2 3-8" MAX DEPTH AT WIRING COMPARTMENT; ALUMINUM BEZEL; CEILING RETENTION CLIPS. 18.3 LBS.	COOPER METALUX FSP-22-32-35-CP125-FPEQ	3500K LED 80+ CRI 3,200 LM	INTEGRAL ELECTRONIC LED POWER SUPPLY, 0-10V DIMMING	120V	29W	
AK1	RECESSED	RECESS MOUNTED LED DOWNLIGHT WITH 4" DIAMETER ROUND APERTURE; CLEAR DIFFUSE REFLECTOR; 10.8" W X 8.7" D X 4.8" H; NOMINAL 1000 LUMEN OUTPUT. 7 LBS.	LIGHTOLIER 4RN/ C4L10835MZ10U/ C4R-DL-CD-P	3500K LED 80+ CRI 1,000 LM	0-10V DIMMING TO 1%	UNV	11W	
AL1	SURFACE	SURFACE MOUNTED STRIPLIGHT WITH SQUARE LENS AND WIRE GUARD; DIE-FORMED CRS HOUSING 3" H X 2-9/16" W X 2' LENGTH; PAINT AFTER FABRICATION. 4 LBS.	WILLIAMS 7SS-2-L15-8-35-WG75-DIM-UNV	3500K LED 80+ CRI 1,592 LM	INTEGRAL ELECTRONIC LED POWER SUPPLY, 0-10V DIMMING	UNV	11W	

AGENCY APPROVAL STAMP:

IDENTIFICATION STAMP
DIV. OF THE STATE ARCHITECT
APP: 01-120890 INC:
REVIEWED FOR
SS ☑ FLS ☑ ACS ☑
DATE: 10/25/2023

TLCDARCHITECTURE
520 Third St. #250
Santa Rosa, CA 95401
o: 707.525.5600
f: 707.525.5616
tlcd.com

CONSULTANT:

O'MAHONY & MYER
ELECTRICAL ENGINEERING & LIGHTING DESIGN
4340 REDWOOD HWY., SUITE 245
SAN RAFAEL, CALIFORNIA 94903
(415) 492-0420/FAX (415) 479-9662

STAMP:

REGISTERED PROFESSIONAL ENGINEER
PETER A. COLEMAN JAMES
No.E14738
Exp. 6/25
ELECTRICAL
STATE OF CALIFORNIA

REVISIONS:

Number	Date	Description

NAPA VALLEY COLLEGE WINE EDUCATION CENTER

2277 NAPA VALLEJO HWY
NAPA, CA 94558

NAPA VALLEY COLLEGE

DSA APPLICATION NUMBER:
01-120890

TLCD PROJECT NUMBER:
21062.00

DATE:
AUGUST 30, 2023

LUMINAIRE SCHEDULE

E-003

© THESE DRAWINGS ARE INSTRUMENTS OF SERVICE AND ARE THE SOLE PROPERTY OF TLCD ARCHITECTURE. ANY USE WITHOUT WRITTEN CONSENT IS PROHIBITED.

30 x 42"
10/17/2023 1:06:16 PM

NAPA VALLEY COLLEGE WINE EDUCATION CENTER - 222020 R23

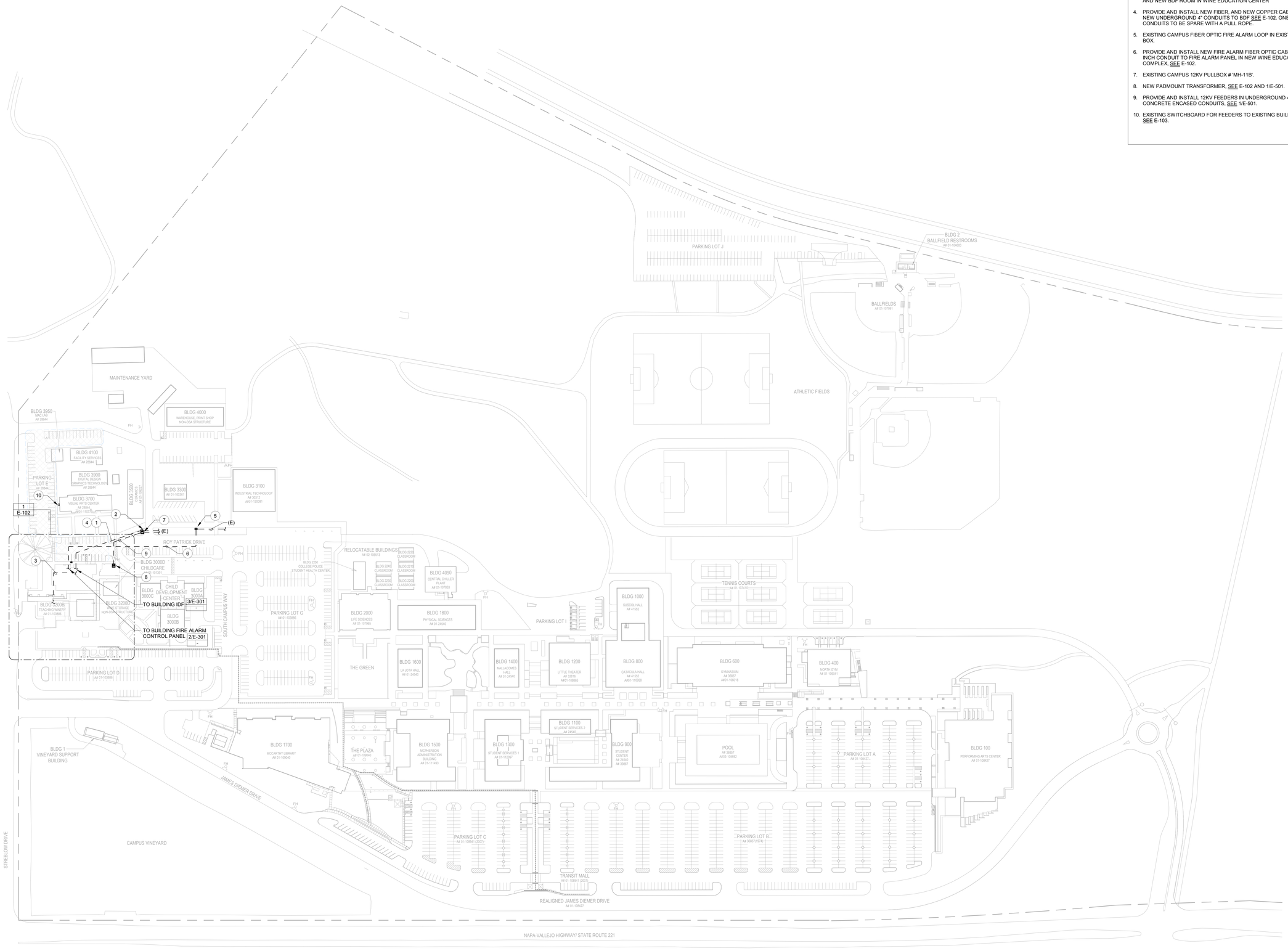

1 SITE PLAN - OVERALL
1" = 100'-0"

NUMBERED SHEET NOTES

1. PROVIDE AND INSTALL NEW 12 STRAND SINGLE MODE FIBER, AND 25 PAIR COPPER FROM TELECOM PULLBOX AT ROY PATRICK DRIVE TO NEW WINE EDUCATION COMPLEX.
2. INTERCEPT SPARE CABLE FEEDING BUILDING 3500 AT EXISTING TELECOM PULL BOX IN RORY PATRICK DRIVE AND RUN 12 STRAND SINGLE MODE FIBER AND 25 PAIR COPPER TO WINE EDUCATION COMPLEX BDF.
3. PROVIDE AND INSTALL (2) 4 INCH CONDUITS BETWEEN BUILDING 3200 B AND NEW BDF ROOM IN WINE EDUCATION CENTER
4. PROVIDE AND INSTALL NEW FIBER, AND NEW COPPER CABLES IN (2) NEW UNDERGROUND 4" CONDUITS TO BDF SEE E-102. ONE OF THE CONDUITS TO BE SPARE WITH A PULL ROPE.
5. EXISTING CAMPUS FIBER OPTIC FIRE ALARM LOOP IN EXISTING PULL BOX.
6. PROVIDE AND INSTALL NEW FIRE ALARM FIBER OPTIC CABLE IN NEW 2 INCH CONDUIT TO FIRE ALARM PANEL IN NEW WINE EDUCATION COMPLEX. SEE E-102.
7. EXISTING CAMPUS 12KV PULLBOX # 'MH-11B'.
8. NEW PADMOUNT TRANSFORMER, SEE E-102 AND 1/E-501.
9. PROVIDE AND INSTALL 12KV FEEDERS IN UNDERGROUND 4" CONCRETE ENCASED CONDUITS, SEE 1/E-501.
10. EXISTING SWITCHBOARD FOR FEEDERS TO EXISTING BUILDING 3200A, SEE E-103.

AGENCY APPROVAL STAMP:

IDENTIFICATION STAMP
DIV. OF THE STATE ARCHITECT
APP: 01-120890 INC:
REVIEWED FOR
SS ☑ FLS ☑ ACS ☑
DATE: 10/25/2023

TLCDARCHITECTURE
520 Third St. #250
Santa Rosa, CA 95401
o: 707.525.5600
f: 707.525.5616
tlcd.com

CONSULTANT:

O'MAHONY & MYER
ELECTRICAL ENGINEERING & LIGHTING DESIGN
4340 REDWOOD HWY., SUITE 245
SAN RAFAEL, CALIFORNIA 94903
(415) 492-0420/FAX (415) 479-9662

STAMP:

REGISTERED PROFESSIONAL ENGINEER
PETER A. COLEMAN JR.
No.E14738
Exp. 6/25
ELECTRICAL
STATE OF CALIFORNIA

REVISIONS:

Number	Date	Description

NAPA VALLEY COLLEGE WINE EDUCATION CENTER

2277 NAPA VALLEJO HWY
NAPA, CA 94558

NAPA VALLEY COLLEGE

DSA APPLICATION NUMBER:
01-120890

TLCD PROJECT NUMBER:
21062.00

DATE:
AUGUST 30, 2023

SITE PLAN ELECTRICAL

E-101

© THESE DRAWINGS ARE INSTRUMENTS OF SERVICE AND ARE THE SOLE PROPERTY OF TLCD ARCHITECTURE. ANY USE WITHOUT WRITTEN CONSENT IS PROHIBITED.

30 x 42"
10/17/2023 1:06:21 PM

NAPA VALLEY COLLEGE WINE EDUCATION CENTER - 222020 R23

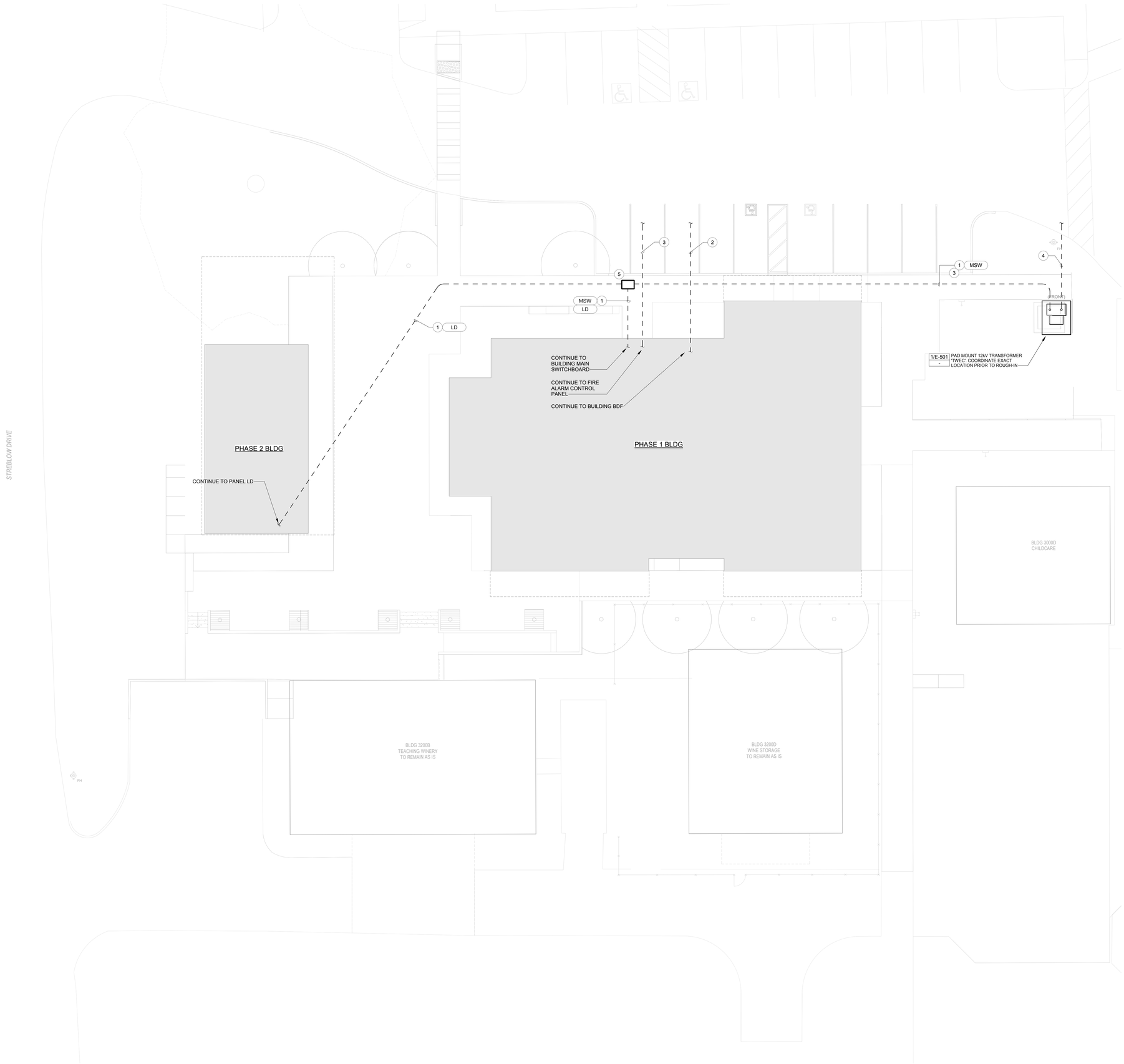

1 SITE PLAN - ELECTRICAL
1" = 10'-0"

NUMBERED SHEET NOTES

1. PROVIDE AND INSTALL UNDERGROUND FEEDERS TO DISTRIBUTION AND BRANCH PANELS AS NOTED WITH ADJACENT FEEDER TAG DESCRIPTION. SEE E-501 FOR FEEDER SIZING & 1/E-701 FOR TRENCHING DETAIL. FEEDER TAG NOTED WITH "SP" SHALL BE SPARE C.O. FOR FUTURE USE.
2. PROVIDE AND INSTALL FIBER OPTIC CABLING FOR NEW BDF, INTERCEPT SPARE CABLE FEEDING BUILDING 3500 AT EXISTING TELECOM PULL BOX IN ROY PATRICK DRIVE AND RUN 12 STRAND SINGLE MODE FIBER AND 25 PAIR COPPER TO WINE EDUCATION COMPLEX BDF. SEE E-101 AND TRENCH DETAIL 1/E-701.
3. PROVIDE AND INSTALL FIBER OPTIC CABLING FOR NEW FIRE ALARM EQUIPMENT, FROM EXISTING CAMPUS FIRE ALARM FIBER LOOP. SEE E-101 AND TRENCH DETAIL 1/E-701.
4. PROVIDE AND INSTALL 12kV UNDERGROUND FEEDERS. SEE 1/E-101 AND 1/E-501.
5. PROVIDE AND INSTALL FLUSH, IN-GRADE CONCRETE PULLBOX. SIZE AS REQUIRED.

PULLBOXES SHALL BE, IN GRADE CHRISTY (OR EQUAL), SIZED AS NOTED ON PLANS. PULLBOX COVER SHALL BE LABELED AS IDENTIFIED ON PLANS. WHERE LOCATED IN TRAFFIC AREAS, BOXES SHALL BE TRAFFIC RATED REINFORCED CONCRETE WITH STEEL FRAME AND STEEL COVER. WHERE LOCATED ELSEWHERE, BOXES SHALL BE REINFORCED CONCRETE AND COMPOSITE COVER. ALL PULLBOX LOCATIONS SHALL BE COORDINATED WITH THE ARCHITECT.

SEE DETAIL: 2/E-701 TYP

AGENCY APPROVAL STAMP:

IDENTIFICATION STAMP
DIV. OF THE STATE ARCHITECT
APP: 01-120890 INC:
REVIEWED FOR
SS ☑ FLS ☑ ACS ☑
DATE: 10/25/2023

TLCDARCHITECTURE
520 Third St. #250
Santa Rosa, CA 95401
o: 707.525.5600
f: 707.525.5616
tlcd.com

CONSULTANT:

O'MAHONY & MYER
ELECTRICAL ENGINEERING & LIGHTING DESIGN
4340 REDWOOD HWY., SUITE 245
SAN RAFAEL, CALIFORNIA 94903
(415) 492-0420/FAX (415) 479-9662

STAMP:

REGISTERED PROFESSIONAL ENGINEER
PETER A. COLEMAN JR.
No.E14738
Exp. 6/25
ELECTRICAL
STATE OF CALIFORNIA

REVISIONS:

Number	Date	Description

NAPA VALLEY COLLEGE WINE EDUCATION CENTER

2277 NAPA VALLEJO HWY
NAPA, CA 94558

NAPA VALLEY COLLEGE

DSA APPLICATION NUMBER:
01-120890

TLCD PROJECT NUMBER:
21062.00

DATE:
AUGUST 30, 2023

PARTIAL SITE PLAN

E-102

© THESE DRAWINGS ARE INSTRUMENTS OF SERVICE AND ARE THE SOLE PROPERTY OF TLCD ARCHITECTURE. ANY USE WITHOUT WRITTEN CONSENT IS PROHIBITED.

30 x 42"
10/17/2023 1:06:26 PM

NAPA VALLEY COLLEGE WINE EDUCATION CENTER - 222020 R23

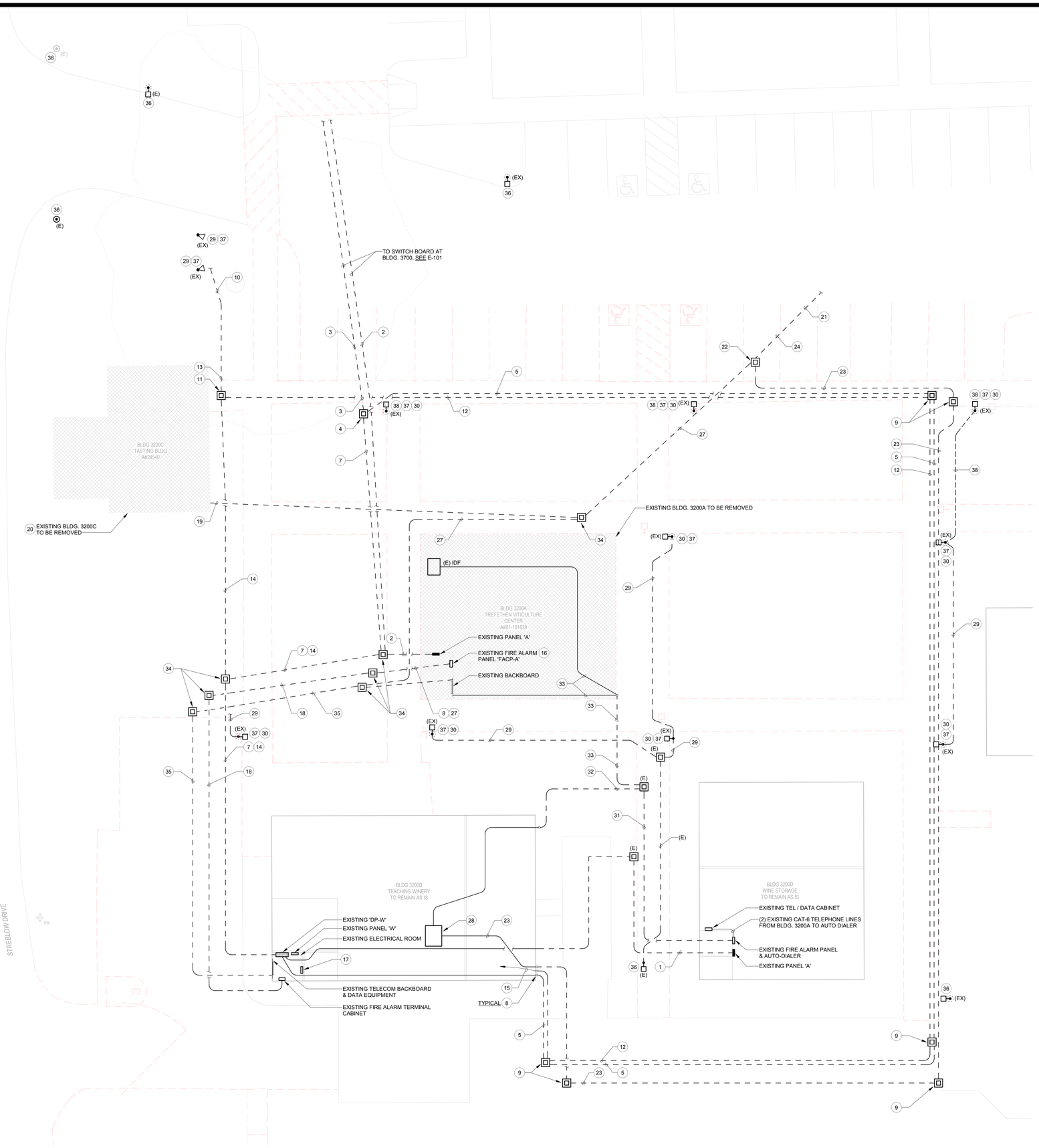

1 SITE PLAN - DEMOLITION
1" = 10'-0"

NUMBERED SHEET NOTES

1. EXISTING FEEDERS TO BUILDING 3200D, WINE STORAGE TO REMAIN.
2. DISCONNECT AND REMOVE EXISTING FEEDERS TO BUILDING 3200A FROM EXISTING SWITCHBOARD AT BUILDING 3700.
3. EXISTING FEEDERS FROM SWITCHBOARD AT BUILDING 3700 TO TEACHING WINERY BUILDING 3200B.
4. PROVIDE AND INSTALL NEW PULL BOX TO INTERCEPT EXISTING FEEDERS TO BUILDING 3200B, SEE NOTE 3 ABOVE. COORDINATE LOCATION.
5. BUILDING 3200B FEEDERS TO BE ROUTED AROUND NEW BUILDING. PROVIDE AND INSTALL NEW FEEDERS IN NEW 4" CONDUIT TO EXISTING BUILDING 3200B, DISTRIBUTION PANEL 'DP-W'. NEW FEEDERS TO BE (4)#500 COOPER, (1)#2G.
6. INTERCEPT EXISTING 400AMP FEEDERS AND REROUTE TO NEW PULL BOX, SEE NOTE 4 ABOVE. SPLICE EXISTING REROUTED FEEDERS TO NEW FEEDERS TO BUILDING 3200B, SEE NOTE 5 ABOVE.
7. DISCONNECT AND REMOVE EXISTING FEEDERS TO BUILDING 3200B FROM PULL BOX NOTED IN NOTE 4 ABOVE TO EXISTING DISTRIBUTION PANEL 'DP-W'. SEE NOTE 5 ABOVE FOR NEW FEEDERS.
8. CONDUIT TO RISE UP ON BUILDING EXTERIOR. CONDUIT TO BE RIGID GALVANIZED STEEL PAINTED TO MATCH WALL.
9. PROVIDE AND INSTALL NEW PULL BOX, COORDINATE LOCATION.
10. EXISTING SITE LIGHTING CONDUIT AND BRANCH CIRCUITING.
11. PROVIDE AND INSTALL NEW PULL BOX TO INTERCEPT EXISTING SITE LIGHTING BRANCH CIRCUITS, SEE NOTE 10 ABOVE. COORDINATE LOCATION.
12. SITE LIGHTING BRANCH CIRCUITS TO BE ROUTED AROUND NEW BUILDING. PROVIDE AND INSTALL 1" CONDUIT AND #8 BRANCH CIRCUIT WIRING TO EXISTING BUILDING 3200 AND RECONNECT.
13. INTERCEPT EXISTING SITE LIGHTING BRANCH CIRCUIT CONDUIT AND WIRING TO NEW PULL BOX, SEE NOTE 11 ABOVE. SPLICE EXISTING REROUTED BRANCH CIRCUITS TO NEW BRANCH CIRCUITS TO BUILDING 3200B, SEE NOTE 12 ABOVE.
14. DISCONNECT AND REMOVE EXISTING SITE LIGHTING BRANCH CIRCUIT FROM PULL BOX NOTED IN NOTE 11 ABOVE. SEE NOTE 12 ABOVE FOR NEW BRANCH CIRCUIT TO 3200D.
15. HOMERUN TO EXISTING PANEL AND CONTROLS.
16. THE EXISTING FIRE ALARM PANEL SERVES EXISTING BUILDING 3200B. DISCONNECT AND RELOCATE THE PANEL TO BUILDING 3200B. SEE NOTE 17 BELOW.
17. INSTALL RELOCATED FIRE ALARM PANEL IN BUILDING 3200B. SEE NOTE 16 ABOVE. PROVIDE AND INSTALL NEW 120VOLT BRANCH CIRCUIT TO PANEL. REDIRECT EXISTING BUILDING 3200B FIRE ALARM DEVICES TO THE RELOCATED PANEL.
18. DISCONNECT AND REMOVE EXISTING FIRE ALARM WIRING FROM EXISTING CONDUITS.
19. DISCONNECT AND REMOVE EXISTING TELECOM WIRING AND OTHER LOW VOLTAGE CABLES TO EXISTING BUILDING.
20. DISCONNECT AND REMOVE EXISTING POWER FEEDERS TO THE BUILDING.
21. EXISTING FIBER OPTIC CABLING AND TELEPHONE CABLING TO BUILDING 3200A.
22. PROVIDE AND INSTALL NEW PULL BOX TO INTERCEPT EXISTING FIBER OPTIC CABLING AND TELEPHONE CABLING TO BUILDING 3200B, SEE NOTE 21 ABOVE. COORDINATE LOCATION.
23. BUILDING 3200B FIBER OPTIC CABLING AND TELEPHONE CABLING TO BE ROUTED AROUND NEW BUILDING. PROVIDE AND INSTALL NEW FIBER OPTIC CABLING AND COPPER CABLING (FOR COSTING USE 12 STRAND SINGLE MODE, AND 50 PAIR COPPER). REROUTE THE FIBER AND COPPER TO BUILDING 3200B. PROVIDE A 4" CONDUIT FOR THE FIBER AND COPPER CABLING AND PROVIDE (1) 4" SPARE CONDUIT AND (1) 2" SPARE CONDUITS.
24. INTERCEPT EXISTING FIBER AND COPPER CABLING AND REROUTE TO NEW PULL BOX, SEE NOTE 22 ABOVE. SPLICE EXISTING CABLES TO NEW CABLES TO BUILDING 3200B, SEE NOTE 23 ABOVE.
25. NOT USED.
26. NOT USED.
27. DISCONNECT AND REMOVE EXISTING FIBER AND COPPER CABLING TO 3200B FROM PULL BOX NOTED IN NOTE 22 ABOVE. SEE NOTE 23 ABOVE FOR NEW CABLES.
28. PROVIDE AND INSTALL NEW IDF EQUIPMENT INCLUDING RACK, PATCH PANELS, WIRE MANAGEMENT AND 120VOLT CIRCUITS. REROUTE ALL EXISTING DATA AND TELEPHONE WIRING IN 3200B TO NEW IDF.
29. DISCONNECT AND REMOVE EXISTING SITE LIGHTING WIRING.
30. DISCONNECT AND REMOVE EXISTING SITE LIGHTING POLEBASE, AND FIXTURE.
31. EXISTING CAT6 CABLING TO BUILDING 3200D FROM BUILDING 3200A, 2" CONDUIT WITH THE FOLLOWING.
    - (2) TELEPHONE LINES FOR FIRE ALARM
    - (4) TELEPHONE LINES FOR OFFICE PHONES
    - (4) DATA LINES FOR OFFICE OUTLETS
    - (2) DATA LINES FOR E.M.S.
    - (2) TELEPHONE LINES FOR BLUE PHONES
32. WITH THE REMOVAL OF BUILDING 3200A REROUTE THE TELEPHONE/DATA CABLES FROM WINE STORAGE 3200D TO NEW IDF IN BUILDING 3200B. PROVIDE AND INSTALL 2" CONDUIT WITH NEW CABLES, SEE NOTE 31 ABOVE FOR QUANTITY OF CABLES.
33. REMOVE EXISTING CABLES FROM BUILDING 3200A TO BUILDING 3200D. THE EXISTING CABLES WILL BE REROUTED TO BUILDING 3200B, SEE NOTE 32 ABOVE.
34. REMOVE EXISTING PULL BOXES.
35. DISCONNECT AND REMOVE EXISTING FIBER AND COPPER CABLE FROM BUILDING 3200A TO 3200B. SEE NOTE 23 ABOVE FOR NEW CABLING TO
36. EXISTING LIGHTING TO REMAIN, PROTECT IN PLACE.
37. EXISTING LIGHTING TO BE REMOVED.
38. FIELD VERIFY IF EXISTING CONDUITS ARE TO REMAIN.

NOTE:
INDICATED PULLBOXES, UNDERGROUND CONDUITS, AND EQUIPMENT LOCATIONS ARE APPROXIMATE ONLY. FIELD VERIFY.

AGENCY APPROVAL STAMP:

IDENTIFICATION STAMP
DIV. OF THE STATE ARCHITECT
APP: 01-120890 INC:
REVIEWED FOR
SS ☑ FLS ☑ ACS ☑
DATE: 10/25/2023

TLCDARCHITECTURE
520 Third St. #250
Santa Rosa, CA 95401
o: 707.525.5600
f: 707.525.5616
tlcd.com

CONSULTANT:

O'MAHONY & MYER
ELECTRICAL ENGINEERING & LIGHTING DESIGN
4340 REDWOOD HWY., SUITE 245
SAN RAFAEL, CALIFORNIA 94903
(415) 492-0420/FAX (415) 479-9662

STAMP:

REGISTERED PROFESSIONAL ENGINEER
PETER A. COLEMAN JAMES
No.E14738
Exp. 6/25
ELECTRICAL
STATE OF CALIFORNIA

REVISIONS:

Number	Date	Description

NAPA VALLEY COLLEGE WINE EDUCATION CENTER

2277 NAPA VALLEJO HWY
NAPA, CA 94558

NAPA VALLEY COLLEGE

DSA APPLICATION NUMBER:
01-120890

TLCD PROJECT NUMBER:
21062.00

DATE:
AUGUST 30, 2023

PARTIAL SITE PLAN - DEMO

E-103

© THESE DRAWINGS ARE INSTRUMENTS OF SERVICE AND ARE THE SOLE PROPERTY OF TLCD ARCHITECTURE. ANY USE WITHOUT WRITTEN CONSENT IS PROHIBITED.

30 x 42"
10/17/2023 1:06:28 PM

NAPA VALLEY COLLEGE WINE EDUCATION CENTER - 222020 R23

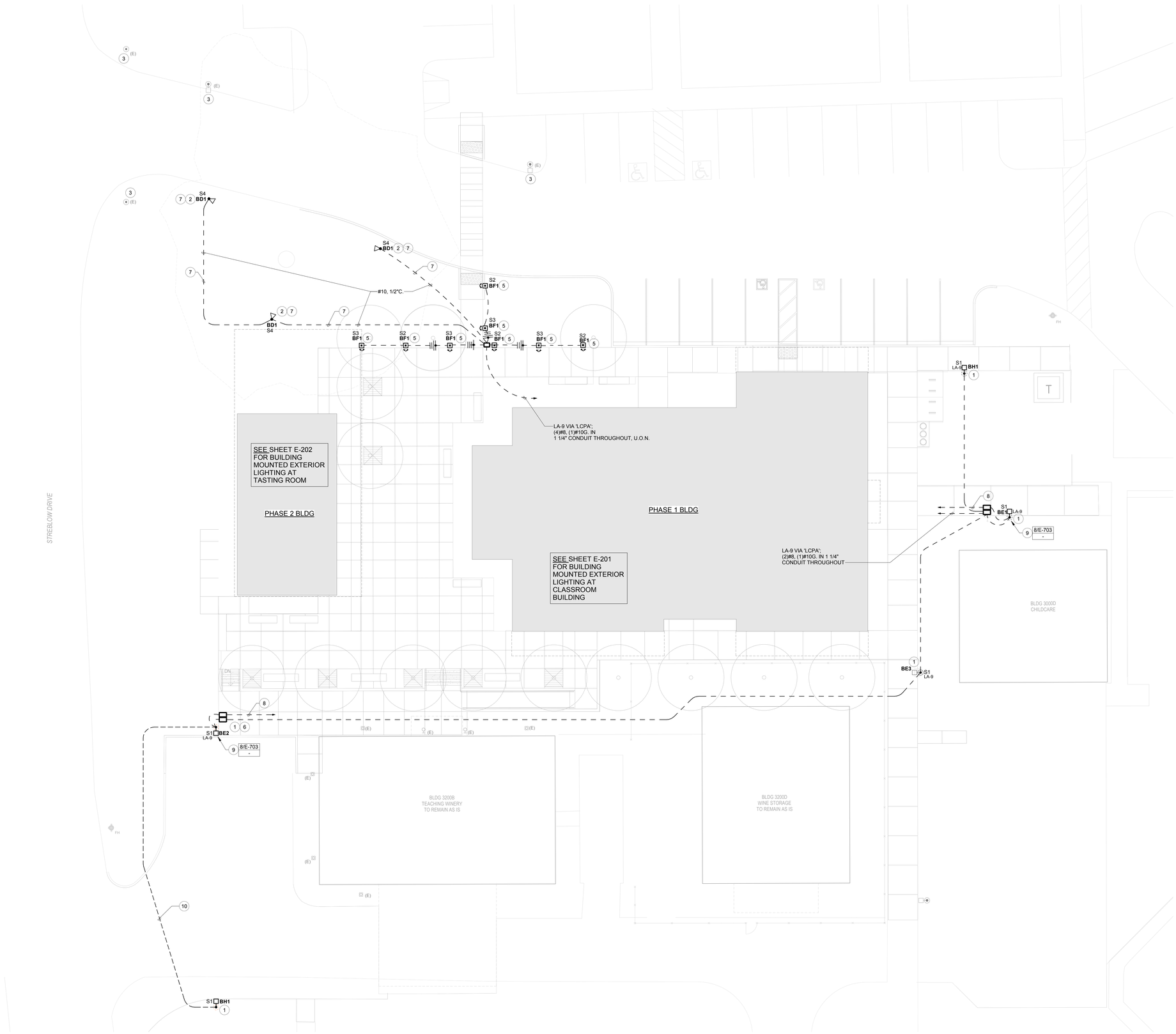

1 SITE PLAN - LIGHTING
3/32" = 1'-0"

NUMBERED SHEET NOTES

1. POLE MOUNTED ON FLUSH BASE. SEE DETAIL 1/E-703.
2. STAKE MOUNTED FLOOD LIGHT, AIM UP TO ILLUMINATE TREE CANOPY. ORIENT 45 DEGREE GLARE SHIELD TO PREVENT GLARE AT ROADWAYS AND PEDESTRIAN AREAS.
3. EXISTING LIGHTING TO REMAIN, PROTECT IN PLACE.
4. NOT USED.
5. BOLLARD MOUNTED AT WALKWAY OR PLANTING AREA. SEE DETAIL 2/E-703.
6. PROVIDE WITH POLE MOUNTED OCCUPANCY SENSOR TO TOGGLE BETWEEN LOW AND HIGH OUTPUT FOR SECURITY.
7. SEE LANDSCAPE DRAWINGS AND SPECIFICATIONS FOR CONSTRUCTIONS REQUIREMENTS WITHIN ROOT ZONE OF LARGE TREE.
8. PROVIDE AND INSTALL 1-1/4" C.O. HOMERUN TO BUILDING 'BDF' FOR P.O.E. SECURITY CAMERA AND CAT6A OSP RATED CABLING. CAMERA AND CABLING BY OTHERS.
9. POLE SHALL BE PROVIDED WITH STANDARD HANDHOLE AT BASE, AND AN ADDITIONAL HAND HOLE UP HIGH, FOR PTZ SECURITY CAMERA. THE HEIGHT OF EACH HANDHOLE SHALL BE VERIFIED WITH THE SECURITY VENDOR PRIOR TO RELEASE OF THE POLE SUBMITTAL.
10. SAW CUT EXISTING PAVEMENT, PATCH AND REPAIR AFTER INSTALLING CONDUIT.

AGENCY APPROVAL STAMP:

IDENTIFICATION STAMP
DIV. OF THE STATE ARCHITECT
APP: 01-120890 INC:
REVIEWED FOR
SS ☑ FLS ☑ ACS ☑
DATE: 10/25/2023

TLCDARCHITECTURE
520 Third St. #250
Santa Rosa, CA 95401
o: 707.525.5600
f: 707.525.5616
tlcd.com

CONSULTANT:

O'MAHONY & MYER
ELECTRICAL ENGINEERING & LIGHTING DESIGN
4340 REDWOOD HWY., SUITE 245
SAN RAFAEL, CALIFORNIA 94903
(415) 492-0420/FAX (415) 479-9662

STAMP:

REGISTERED PROFESSIONAL ENGINEER
PETER A. COLEMAN JAMES
No.E14738
Exp. 6/25
ELECTRICAL
STATE OF CALIFORNIA

REVISIONS:

Number	Date	Description

NAPA VALLEY COLLEGE WINE EDUCATION CENTER

2277 NAPA VALLEJO HWY
NAPA, CA 94558

NAPA VALLEY COLLEGE

DSA APPLICATION NUMBER:
01-120890

TLCD PROJECT NUMBER:
21062.00

DATE:
AUGUST 30, 2023

SITE PLAN - LIGHTING

E-104

© THESE DRAWINGS ARE INSTRUMENTS OF SERVICE AND ARE THE SOLE PROPERTY OF TLCD ARCHITECTURE. ANY USE WITHOUT WRITTEN CONSENT IS PROHIBITED

30 x 42"
10/17/2023 1:06:31 PM

NAPA VALLEY COLLEGE WINE EDUCATION CENTER - 222020 R23

NUMBERED SHEET NOTES

1 AIRCRAFT CABLE SUSPENDED AT 18" BELOW A.C.T. CEILING TO TOP OF LUMINAIRE. SEE 6/E-703 AND 7/E-703.
2 AIRCRAFT CABLE SUSPENDED AT 32" BELOW SLAT CEILING TO TOP OF LUMINAIRE. SEE 1/E-704.
3 WALL MOUNTED ABOVE MIRRORS/STALLS. PROVIDE BLOCING AS REQUIRED AT ALL MOUNTING POINTS.
4 PROVIDE AND INSTALL WEATHERPROOF J-BOX FOR ILLUMINATED SIGNAGE BY OTHERS. CONNECT COMPLETE VIA RELAY IN LIGHTING CONTROL PANEL 'LCPA'. COORDINATE EXACT LOCATION OF J-BOX WITH ARCHITECT PRIOR TO ROUGH-IN.
6 PROVIDE AN EMERGENCY LIGHTING CONTROL MODULE FOR ALL SWITCHED LIGHT FIXTURES ON EMERGENCY INVERTER. THIS INCLUDES EMERGENCY FIXTURES CONTROLLED BY OCCUPANCY SENSORS. SEE RELAY SCHEDULES AND DETAILS ON E-505. CONNECT EMERGENCY LUMINAIRES TO NON SWITCHED NORMAL CIRCUIT AHEAD OF ROOM CONTROLLER OR RELAY FOR NORMAL POWER SENSING. MOUNT CONTROL MODULE/TEST SWITCH 7'-6" A.F.F. AND ALIGN WITH LIGHTS SWITCH BELOW WHEREVER POSSIBLE.
7 WALL MOUNTED AT 10'-0" A.F.F. TO BOTTOM OF LUMINAIRE. WHERE MOUNTED TO BOARD AND BATTEN WALL, CENTER BETWEEN BATTENS.
8 LABEL SWITCH 'ROOF LIGHTS'. SEE E-303 FOR LUMINAIRES CONTROLLED.
10 RECESS MOUNTED AT A.C.T CEILING. SEE DETAIL 3/E-703.
11 MOUNTED TO UNDERSIDE OF UPPER CABINET. SEE DETAIL 4/E-703. COORDINATE WITH G.C. FOR PROVISION OF CONCEALING FASCIA.
12 PROVIDE AND INSTALL DIMMER SWITCH(ES), OCCUPANCY SENSOR(S), PHOTOSENSOR(S), ROOM CONTROLLERS, PLUG CONTROLLERS, ISOLATED RELAYS FOR HVAC INTERFACE AND NETWORK BRIDGES WHERE SHOWN. SEE DETAILS ON SHEET E-505. MOUNT ROOM AND PLUG CONTROLLERS ABOVE ACCESSIBLE CEILING WHEREVER POSSIBLE.
13 EXTERIOR LIGHTING CONTROL OVERRIDE SWITCHES. LABEL BUTTONS AS FOLLOWS:

S1: POLE LIGHTS
S2: BOLLARDS
S3: BOLLARDS
S4: GROUND FLOOD
S5: ED CENTER
S6: ED CENTER
S12: SIGN

14 PROGRAM THIS SWITCH OR DIMMER TO TURN LIGHTS 'ON' ONLY.
15 MOUNT NETWORK CABINET WITH NB-ROUTER ABOVE 'LCPA'.

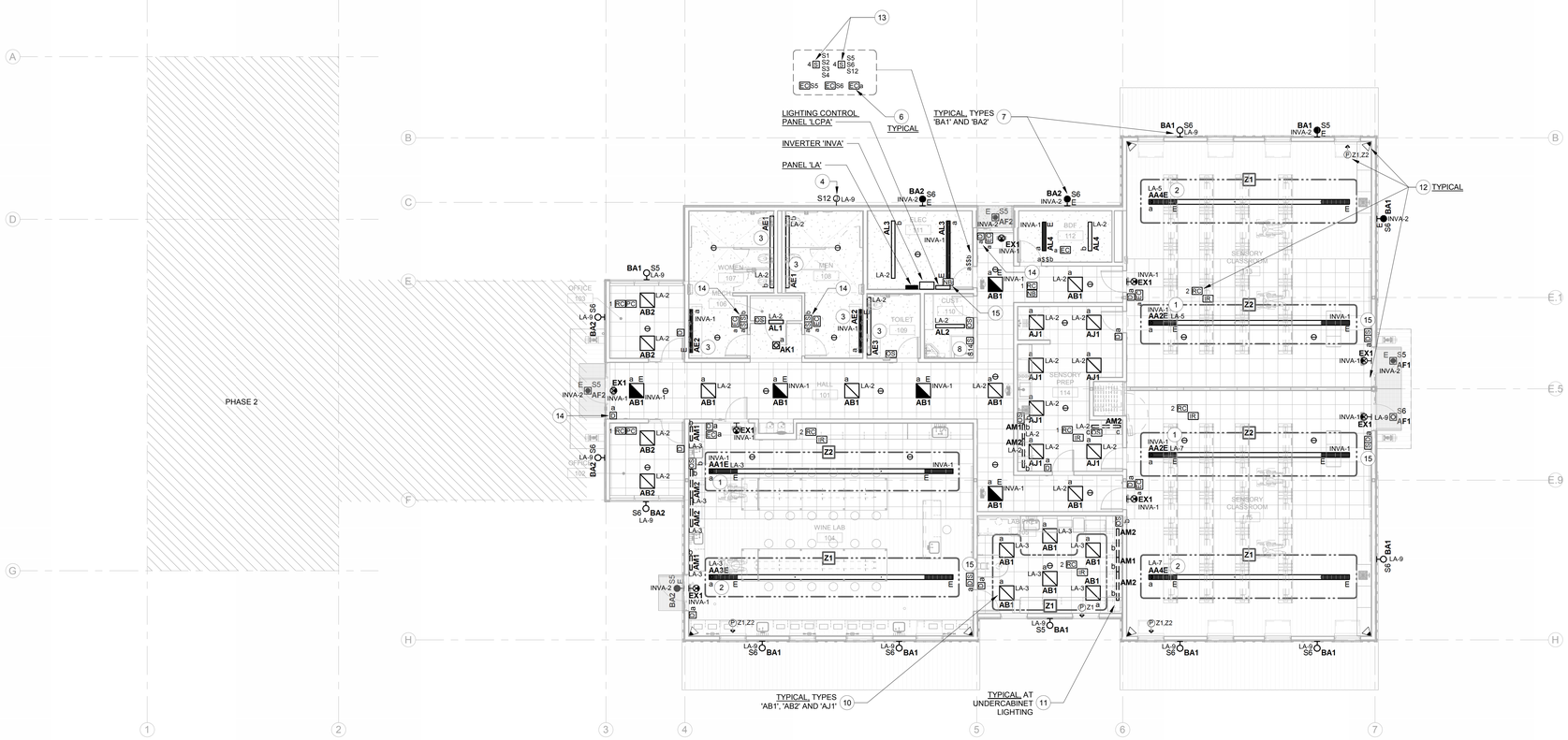

1 LIGHTING PLAN - PHASE 1
1/8" = 1'-0"

30 x 42"
10/17/2023 1:06:37 PM

AGENCY APPROVAL STAMP:

IDENTIFICATION STAMP
DIV. OF THE STATE ARCHITECT
APP: 01-120890 INC:
REVIEWED FOR
SS ☑ FLS ☑ ACS ☑
DATE: 10/25/2023

TLCDARCHITECTURE
520 Third St. #250
Santa Rosa, CA 95401
o: 707.525.5600
f: 707.525.5616
tlcd.com

CONSULTANT:

O'MAHONY & MYER
ELECTRICAL ENGINEERING & LIGHTING DESIGN
4340 REDWOOD HWY., SUITE 245
SAN RAFAEL, CALIFORNIA 94903
(415) 492-0420/FAX (415) 479-9662

STAMP:

REGISTERED PROFESSIONAL ENGINEER
PETER A. COLENBRANDER
No.E14738
Exp. 6/25
ELECTRICAL
STATE OF CALIFORNIA

REVISIONS:

Number	Date	Description

NAPA VALLEY COLLEGE WINE EDUCATION CENTER

2277 NAPA VALLEJO HWY
NAPA, CA 94558

NAPA VALLEY COLLEGE

DSA APPLICATION NUMBER:
01-120890

TLCD PROJECT NUMBER:
21062.00

DATE:
AUGUST 30, 2023

FLOOR PLAN LIGHTING - PHASE 1

E-201

© THESE DRAWINGS ARE INSTRUMENTS OF SERVICE AND ARE THE SOLE PROPERTY OF TLCD ARCHITECTURE. ANY USE WITHOUT WRITTEN CONSENT IS PROHIBITED.

NAPA VALLEY COLLEGE WINE EDUCATION CENTER - 222020 R23

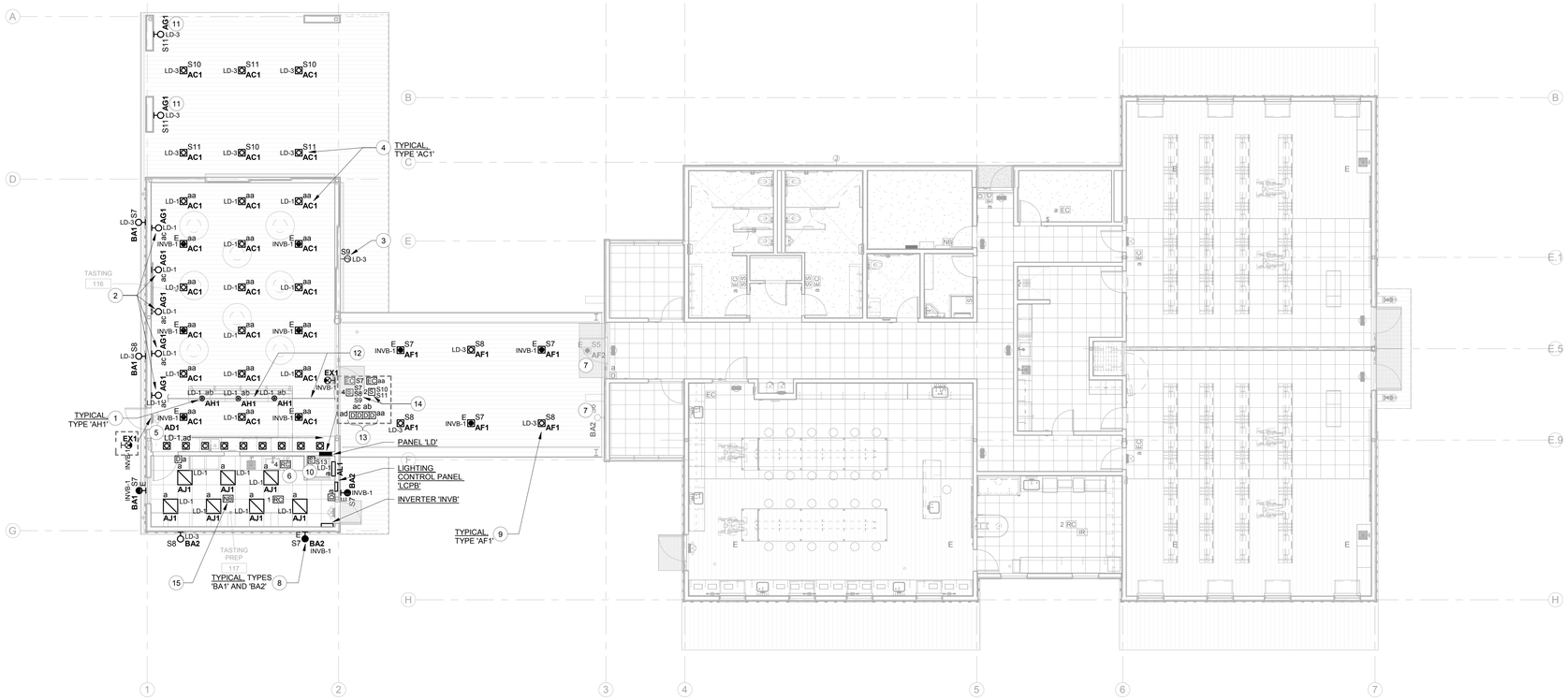

1 LIGHTING PLAN - PHASE 2
1/8" = 1'-0"

NUMBERED SHEET NOTES

1. PENDANT MOUNTED FROM SLAT CEILING AT 7'-0" A.F.F. TO BOTTOM OF LUMINAIRE.
2. WALL MOUNTED AT 10'-0" A.F.F. TO BOTTOM OF LUMINAIRE. MOUNT LUMINAIRE FACING UP TO LIGHT THE CEILING. CENTER LUMINAIRE ON SEAM BETWEEN BOARD SLATS.
3. PROVIDE AND INSTALL WEATHERPROOF J-BOX FOR ILLUMINATED SIGN BY OTHERS. CONNECT COMPLETE VIA RELAY IN LIGHITNG CONTROL PANEL 'LCPB'. COORDINATE EXACT LOCATION OF J-BOX WITH ARCHITECT PRIOR TO ROUGH-IN.
4. RECESS MOUNTED AT SLOPED CEILING. LUMINAIRE IS ADJUSTABLE, AIM STRAIGHT DOWN. CENTER ON SEAM BETWEEN BOARD SLATS.
5. RECESS MOUNTED AT SOFFIT. COORDINATE SOFFIT FRAMING WITH G.C.
6. LIGHTING CONTROL EQUIPMENT FOR TASTING ROOM 101.
7. DEMO EXTERIOR LUMINAIRE INSTALLED IN PHASE 1 AT INDICATED LOCATION. REMOVE ALL CONDUCTORS BACK TO NERAEST OUTLET TO REMAIN. WHERE AN UNCOVERED JUNCTION BOX REMAINS, PROVIDE AND INSTALL BLANK WEATHERPROOF COVERPLATE, PAINTED TO MATCH WALL. .
8. WALL MOUNTED AT 10'-0" A.F.F. TO BOTTOM OF LUMINAIRE. WHERE MOUNTED TO BOARD AND BATTEN WALL, CENTER BETWEEN BATTENS.
9. RECESS MOUNTED, CENTER ON SEAM BETWEEN BOARD SLATS.
10. SWITCH FOR ROOF MOUNTED LIGHTING. SEE E-304 FOR LUMINAIRES CONTROLLED VIA 'LCPB'. LABEL 'ROOF LT'.
11. WALL MOUNTED AT 10'-0" A.F.F. TO BOTTOM OF LUMINAIRE. MOUNT LUMINAIRE FACING UP TO LIGHT THE CEILING. SEE DETAIL 5/E-703.
12. HORIZONTAL BRACING CABLE, FROM WALL TO WALL, ATTACHED TO EACH LUMINAIRE. SUSPENSION CABLE, TO PREVENT SWAY. SEE DETAIL 4/E-704. MOUNT AT 9'-6" A.F.F.
13. LABEL DIMMERS AS FOLLOWS:

    aa: DOWNLIGHTS
    ab: PENDANTS
    ac: WALL SCONCE
    ad: COUNTER
14. EXTERIOR LIGHTING CONTROL OVERRIDE SWITCHES. LABEL BUTTONS AS FOLLOWS:

    S7: CANOPY
    S8: CANOPY
    S9: SIGN
    S10: PATIO DNLTS
    S11: PATIO WALL
15. NETWORK CABINET WITH NB-ROUTER MOUNTED ABOVE ACCESSIBLE CEILING. ADD A MECHANICALLY ATTACHED LAMINATED LABEL ON THE CEILING TILE THAT SAYS "LIGHTING CONTROL EQUIPMENT ABOVE THIS TILE."

AGENCY APPROVAL STAMP:

IDENTIFICATION STAMP
DIV. OF THE STATE ARCHITECT
APP: 01-120890 INC:
REVIEWED FOR
SS ☑ FLS ☑ ACS ☑
DATE: 10/25/2023

TLCDARCHITECTURE
520 Third St. #250
Santa Rosa, CA 95401
o: 707.525.5600
f: 707.525.5616
tlcd.com

CONSULTANT:

O'MAHONY & MYER
ELECTRICAL ENGINEERING & LIGHTING DESIGN
4340 REDWOOD HWY., SUITE 245
SAN RAFAEL, CALIFORNIA 94903
(415) 492-0420/FAX (415) 479-9662

STAMP:

REGISTERED PROFESSIONAL ENGINEER
PETER J. COLENBRANDER
No.E14738
Exp. 6/25
ELECTRICAL
STATE OF CALIFORNIA

REVISIONS:

Number	Date	Description

NAPA VALLEY COLLEGE WINE EDUCATION CENTER

2277 NAPA VALLEJO HWY
NAPA, CA 94558

NAPA VALLEY COLLEGE

DSA APPLICATION NUMBER:
01-120890

TLCD PROJECT NUMBER:
21062.00

DATE:
AUGUST 30, 2023

FLOOR PLAN LIGHTING - PHASE 2

E-202

© THESE DRAWINGS ARE INSTRUMENTS OF SERVICE AND ARE THE SOLE PROPERTY OF TLCD ARCHITECTURE. ANY USE WITHOUT WRITTEN CONSENT IS PROHIBITED.

30 x 42"
10/17/2023 1:06:43 PM

NAPA VALLEY COLLEGE WINE EDUCATION CENTER - 222020 R23

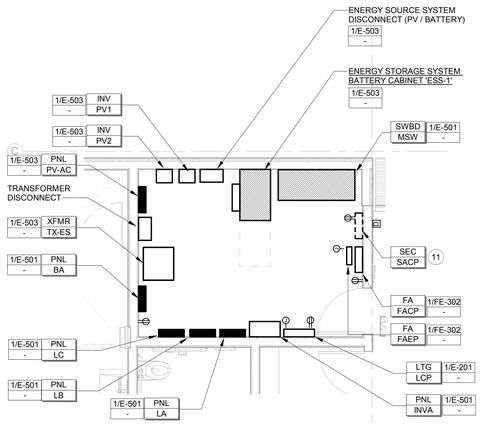

2 PARTIAL PLAN - ELECTRICAL ROOM
1/4" = 1'-0"

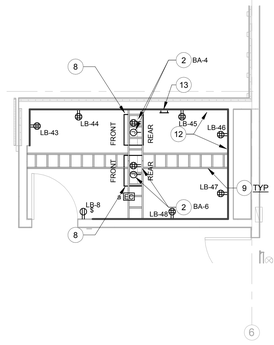

3 PARTIAL PLAN - BDF ROOM
1/4" = 1'-0"

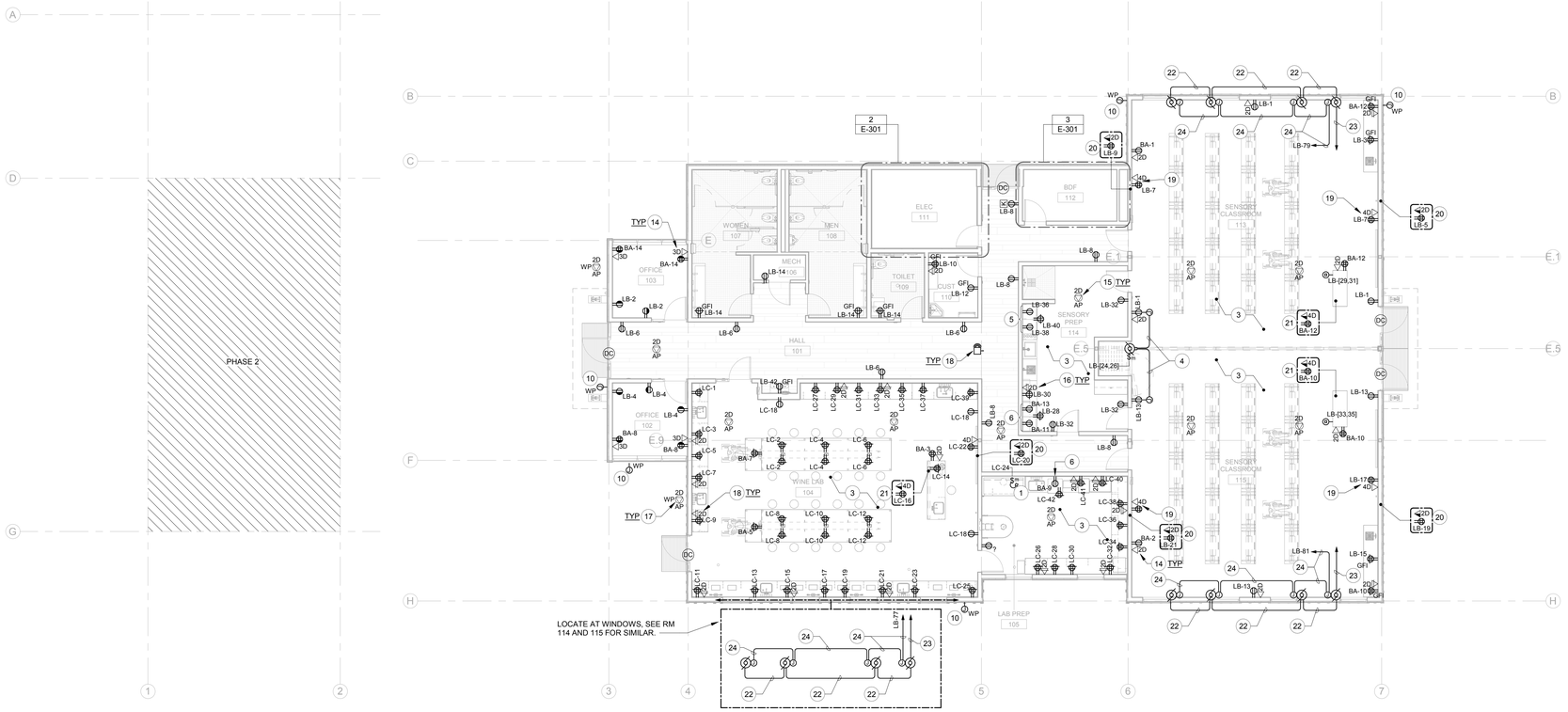

1 FLOOR PLAN - POWER & SIGNAL - PHASE 1
1/8" = 1'-0"

NUMBERED SHEET NOTES

1. CONNECT COMPLETE TO FUME HOOD INTEGRAL RECEPTACLE AND LIGHTING CIRCUITS. SEE MECH/PLUM EQPT CONNECTION PLAN FOR EXHAUST FAN CONNECTIONS.
2. PROVIDE DEDICATED QUAD RECEPTACLE AND J-BOX WITH #2AWG G. TO NEAREST BUILDING ELECTRODE. LOCATE EQUIPMENT WITHIN IDF CABINET (OR RACK).
3. ALL POWER RECEPTACLES IN THIS ROOM SHALL BE GFI TYPE.
4. CONNECT COMPLETE TO PARTITION MOTOR ASSEMBLY. ALSO PROVIDE AND INSTALL 3/4" RACEWAY FOR CONTROL WIRING.
5. DISHWASHER RECEPTACLE(S) - CONNECT COMPLETE. COORDINATE WITH VENDOR SHOP DRAWINGS PRIOR TO ROUGH-IN.
6. UNDERCOUNTER REFRIGERATOR RECEPTACLE(S) - CONNECT COMPLETE. COORDINATE WITH VENDOR SHOP DRAWINGS PRIOR TO ROUGH-IN.
7. NOT USED.
8. PROVIDE AND INSTALL 19"W X 7' HIGH TELECOM RACK (CPI 46353-703) WITH 4" VERTICAL CABLE MANAGERS (CPI 12096-704) ON BOTH SIDES OF EACH RACK. SEE DETAILS 8 & 9 / E-702.
9. PROVIDE AND INSTALL 12" WIDE LADDER RACK (CPI 10250-712) AT 7'-6" A.F.F. SEE DETAILS 7 & 10 / E-702.
10. PROVIDE AND INSTALL J-BOX WITH 1" C.O. HOMERUN TO BDF ROOM, FOR POE SECURITY SYSTEM CAMERA. EXACT HEIGHT TO BE VERIFIED WITH DISTRICT VENDOR PRIOR TO ROUGH-IN. DESIGN MOUNTING HEIGHT IS 12'-0" A.F.F.
11. PROVIDE AND INSTALL SECURITY SYSTEM RACEWAY COMPLETE FROM EACH DEVICE SHOWN TO SECURITY PANEL AT ELECTRICAL ROOM; U.O.N.. PANEL, DEVICES, AND WIRING SHALL BE BY CAMPUS VENDOR.
12. PROVIDE AND INSTALL 4 FOOT WIDE BY 8 FOOT HIGH BY THREE-QUARTER INCH FIRE RATED PLYWOOD AT 6 INCHES A. F. F. PAINT PLYWOOD. SEE DETAIL 4/E7.02.
13. GROUND BUS BAR. GROUND LADDER RACK AND EQUIPMENT RACKS PER RACK MANUFACTURER'S REQUIREMENTS. SEE ELECTRICAL DRAWINGS.
14. PROVIDE AND INSTALL STANDARD OUTLET WITH CAT 6A CABLE/JACKS THAT 18 INCHES AFF. NUMBER REPRESENTS NUMBER OF CAT6A CABLE/JACKS.
15. PROVIDE AND INSTALL (TWO) CAT 6A CABLES COMPLETE WITH JACKS AND WIRELESS ACCESS POINTS (WAP). TERMINATE CABLE AND JACK IN BOX IN CEILING AREA.
16. PROVIDE AND INSTALL STANDARD OUTLET WITH SIX A CABLE/JACKS ABOVE COUNTER ADJACENT TO POWER RECEPTACLE. NUMBER REPRESENTS NUMBER OF CAT SIX A CABLE/JACKS.
17. PROVIDE AND INSTALL (2) CAT SIX A CABLES COMPLETE WITH JACKS AND WIRELESS ACCESS POINTS (WAP) IN WEATHERPROOF OBERON BOX AT 120 INCHES A.F.F. ON BUILDING EXTERIOR WERE SHOWN.
18. CELL PHONE EXTENDERS TO PROVIDE SIGNAL COVERAGE THROUGHOUT BUILDING FOR 3G, 4G, AND 5G. TYPICAL THROUGHOUT BUILDING. LOCATED ABOVE CORRIDOR CEILING; U.O.N.
19. LOCATE ADJACENT AV DEVICE (AV DEVICE BOX BY AV CONTRACTOR) AT 18" A.F.F. TO TOP OF BOX. CONTRACTOR SHALL FULLY COORDINATE LOCATIONS WITH AV ROUGH-IN SCOPE OF WORK, SEE AV 'TA' SERIES PLANS.
20. LOCATE IN BOX (BOX BY AV CONTRACTOR) BEHIND DISPLAY. CONTRACTOR SHALL FULLY COORDINATE LOCATIONS WITH AV ROUGH-IN SCOPE OF WORK, SEE AV 'TA' SERIES PLANS.
21. LOCATE IN BOX (BOX BY AV CONTRACTOR) WITHIN TEACHING CABINET. CONTRACTOR SHALL FULLY COORDINATE LOCATIONS WITH AV ROUGH-IN SCOPE OF WORK, SEE AV 'TA' SERIES PLANS.
22. PROVIDE AND INSTALL 1/2" RACEWAY FOR LOW VOLTAGE SHADE CABLING. CABLING BY VENDOR. COORDINATE WITH VENDOR SHOP DRAWINGS PRIOR TO ROUGH-IN. INSTALLATION SHALL BE CONCEALED THROUGH-OUT.
23. CONTINUE LOW VOLTAGE RACEWAY HOMERUN TO WALL CONTROL LOCATION AT TEACHERS DESK. SEE LIGHTING PLANS.
24. PROVIDE AND INSTALL 120V BRANCH CIRCUIT FOR MOTORIZED SHADE SYSTEM. (2) #12 + (1) #12G. IN 3/4" C.. COORDINATE WITH VENDOR SHOP DRAWINGS PRIOR TO ROUGH-IN. INSTALLATION SHALL BE CONCEALED THROUGH-OUT.

AGENCY APPROVAL STAMP:

IDENTIFICATION STAMP
DIV. OF THE STATE ARCHITECT
APP: 01-120890 INC:
REVIEWED FOR
SS ☑ FLS ☑ ACS ☑
DATE: 10/25/2023

TLCDARCHITECTURE
520 Third St. #250
Santa Rosa, CA 95401
o: 707.525.5600
f: 707.525.5616
tlcd.com

CONSULTANT:

O'MAHONY & MYER
ELECTRICAL ENGINEERING & LIGHTING DESIGN
4340 REDWOOD HWY., SUITE 245
SAN RAFAEL, CALIFORNIA 94903
(415) 492-0420/FAX (415) 479-9662

STAMP:

REGISTERED PROFESSIONAL ENGINEER
PETER A. COLEMAN JR.
No.E14738
Exp. 6/25
ELECTRICAL
STATE OF CALIFORNIA

REVISIONS:

Number	Date	Description

NAPA VALLEY COLLEGE WINE EDUCATION CENTER

2277 NAPA VALLEJO HWY
NAPA, CA 94558

NAPA VALLEY COLLEGE

DSA APPLICATION NUMBER:
01-120890

TLCD PROJECT NUMBER:
21062.00

DATE:
AUGUST 30, 2023

FLOOR PLAN POWER & SIGNAL - PHASE 1

E-301

© THESE DRAWINGS AND INSTRUMENTS OF SERVICE ARE THE SOLE PROPERTY OF TLCD ARCHITECTURE. ANY USE WITHOUT WRITTEN CONSENT IS PROHIBITED.

30 X 42"
10/17/2023 1:06:48 PM

NAPA VALLEY COLLEGE WINE EDUCATION CENTER - 222020 R23

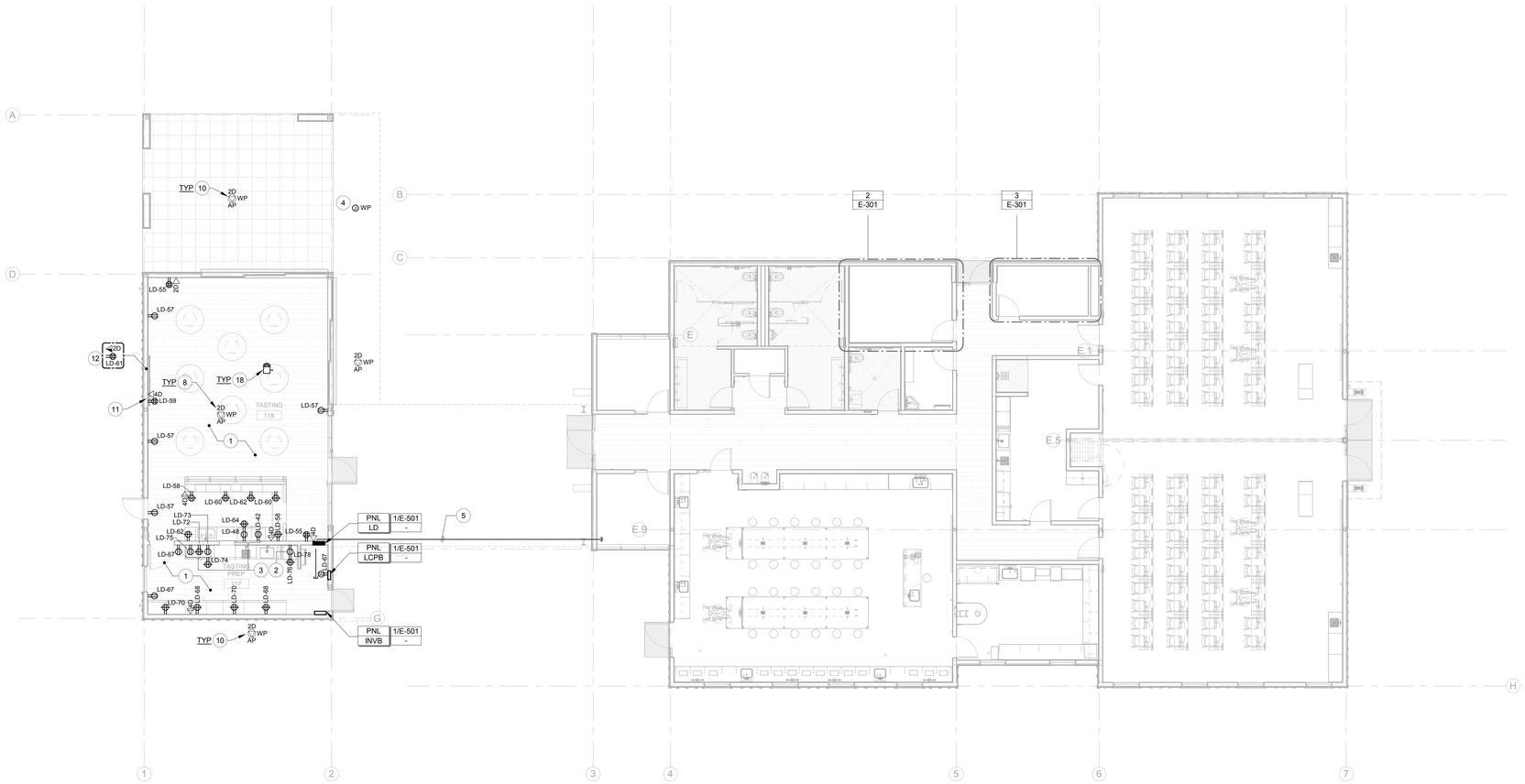

1 FLOOR PLAN - POWER & SIGNAL - PHASE 2
1/8" = 1'-0"

NUMBERED SHEET NOTES

1. ALL POWER RECEPTACLES IN THIS ROOM SHALL BE GFI TYPE.
2. DISHWASHER RECEPTACLE(S) - CONNECT COMPLETE. COORDINATE WITH VENDOR SHOP DRAWINGS PRIOR TO ROUGH-IN.
3. UNDERCOUNTER REFRIGERATOR RECEPTACLE(S) - CONNECT COMPLETE. COORDINATE WITH VENDOR SHOP DRAWINGS PRIOR TO ROUGH-IN.
4. PROVIDE AND INSTALL J-BOX WITH 1" C.O. HOMERUN TO BDF ROOM, FOR POE SECURITY SYSTEM CAMERA.
5. PROVIDE AND INSTALL THE FOLLOWING CONDUIT SYSTEMS IN CONCEALED CHASE ACROSS EXTERIOR CANOPY SYSTEM. COORDINATE EXACT ROUTE PRIOR TO ROUGH-IN:
   (1) 3" C. – DATA CABLING
   (1) 1-1/2" C. – FIRE ALARM
   (1) 1-1/2" C. – SECURITY / EMS
   (2) 2" C. – SPARE
6. PROVIDE AND INSTALL STANDARD OUTLET WITH CAT 6A CABLE/JACKS THAT 18 INCHES AFF. NUMBER REPRESENTS NUMBER OF CAT6A CABLE/JACKS.
7. PROVIDE AND INSTALL (TWO) CAT 6A CABLES COMPLETE WITH JACKS AND WIRELESS ACCESS POINTS (WAP). TERMINATE CABLE AND JACK IN BOX IN CEILING AREA.
8. PROVIDE AND INSTALL STANDARD OUTLET WITH CAT 6A CABLE/JACKS ABOVE COUNTER ADJACENT TO POWER RECEPTACLE. NUMBER REPRESENTS NUMBER OF CAT 6A CABLE/JACKS.
9. PROVIDE AND INSTALL (2) CAT 6A CABLES COMPLETE WITH JACKS AND WIRELESS ACCESS POINTS (WAP) IN WEATHERPROOF OBERON BOX AT 120 INCHES A.F.F. ON BUILDING EXTERIOR WERE SHOWN.
10. CELL PHONE EXTENDERS TO PROVIDE SIGNAL COVERAGE THROUGHOUT BUILDING FOR 3G, 4G, AND 5G. TYPICAL THROUGHOUT BUILDING. LOCATED ABOVE CORRIDOR CEILING; U.O.N.
11. LOCATE ADJACENT AV DEVICE (AV DEVICE BOX BY AV CONTRACTOR) AT 18" A.F.F. TO TOP OF BOX. CONTRACTOR SHALL FULLY COORDINATE LOCATIONS WITH AV ROUGH-IN SCOPE OF WORK, SEE AV 'TA' SERIES PLANS.
12. LOCATE IN BOX (BOX BY AV CONTRACTOR) BEHIND DISPLAY. CONTRACTOR SHALL FULLY COORDINATE LOCATIONS WITH AV ROUGH-IN SCOPE OF WORK, SEE AV 'TA' SERIES PLANS.

AGENCY APPROVAL STAMP:

IDENTIFICATION STAMP
DIV. OF THE STATE ARCHITECT
APP: 01-120890 INC:
REVIEWED FOR
SS ☑ FLS ☑ ACS ☑
DATE: 10/25/2023

TLCDARCHITECTURE
520 Third St. #250
Santa Rosa, CA 95401
o: 707.525.5600
f: 707.525.5616
tlcd.com

CONSULTANT:

O'MAHONY & MYER
ELECTRICAL ENGINEERING & LIGHTING DESIGN
4340 REDWOOD HWY., SUITE 245
SAN RAFAEL, CALIFORNIA 94903
(415) 492-0420/FAX (415) 479-9662

STAMP:

REGISTERED PROFESSIONAL ENGINEER
PETER J. COLENBRANDER
No.E14738
Exp. 6/25
ELECTRICAL
STATE OF CALIFORNIA

REVISIONS:

Number	Date	Description

NAPA VALLEY COLLEGE WINE EDUCATION CENTER

2277 NAPA VALLEJO HWY
NAPA, CA 94558

NAPA VALLEY COLLEGE

DSA APPLICATION NUMBER:
01-120890

TLCD PROJECT NUMBER:
21062.00

DATE:
AUGUST 30, 2023

FLOOR PLAN POWER & SIGNAL - PHASE 2

E-302

© THESE DRAWINGS ARE INSTRUMENTS OF SERVICE AND ARE THE SOLE PROPERTY OF TLCD ARCHITECTURE. ANY USE WITHOUT WRITTEN CONSENT IS PROHIBITED.

30 x 42"
10/17/2023 1:06:58 PM

NAPA VALLEY COLLEGE WINE EDUCATION CENTER - 222020 R23

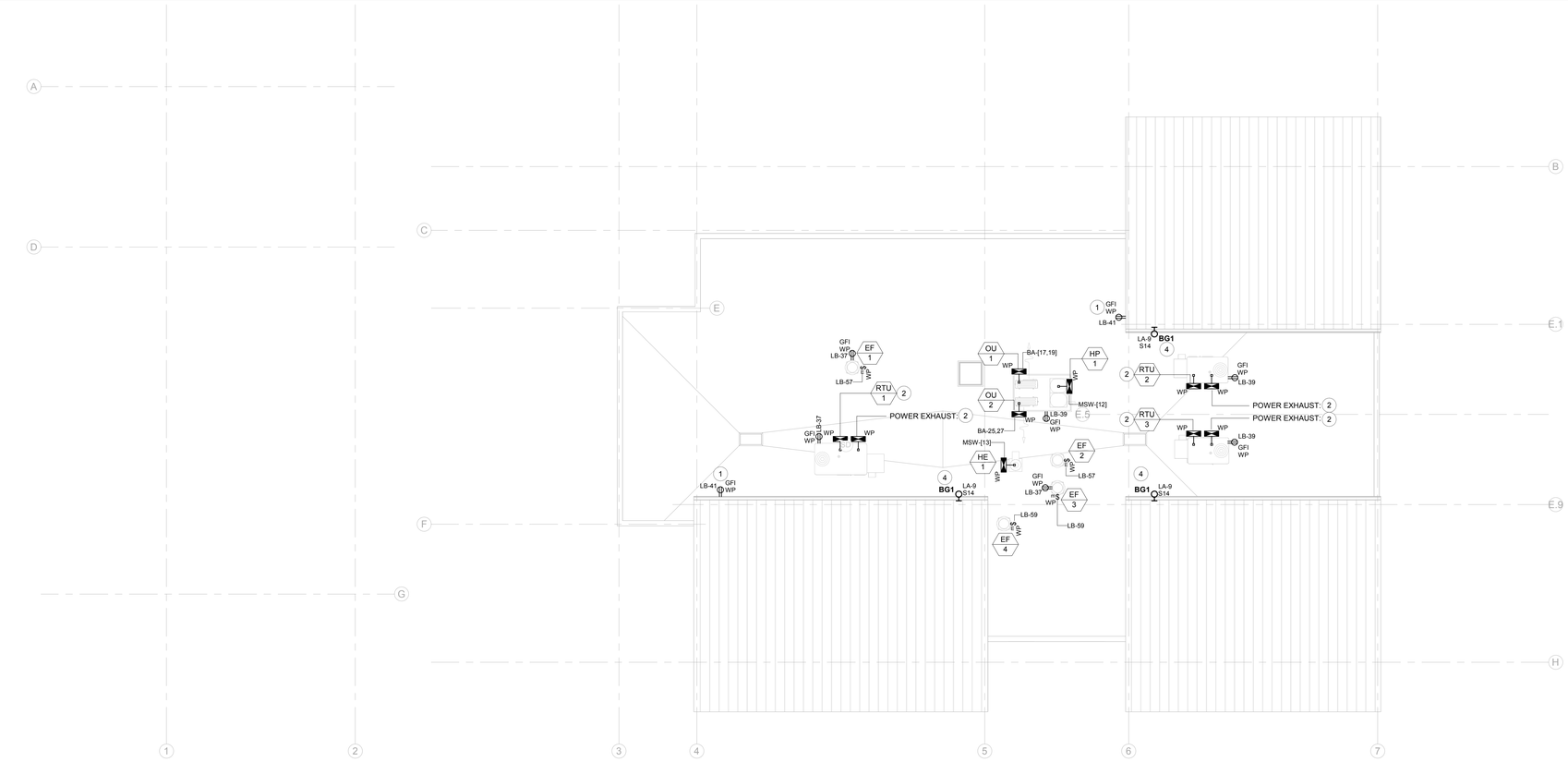

2 ROOF PLAN - MECH/PLUM CONNECTIONS - PHASE 1
1/8" = 1'-0"

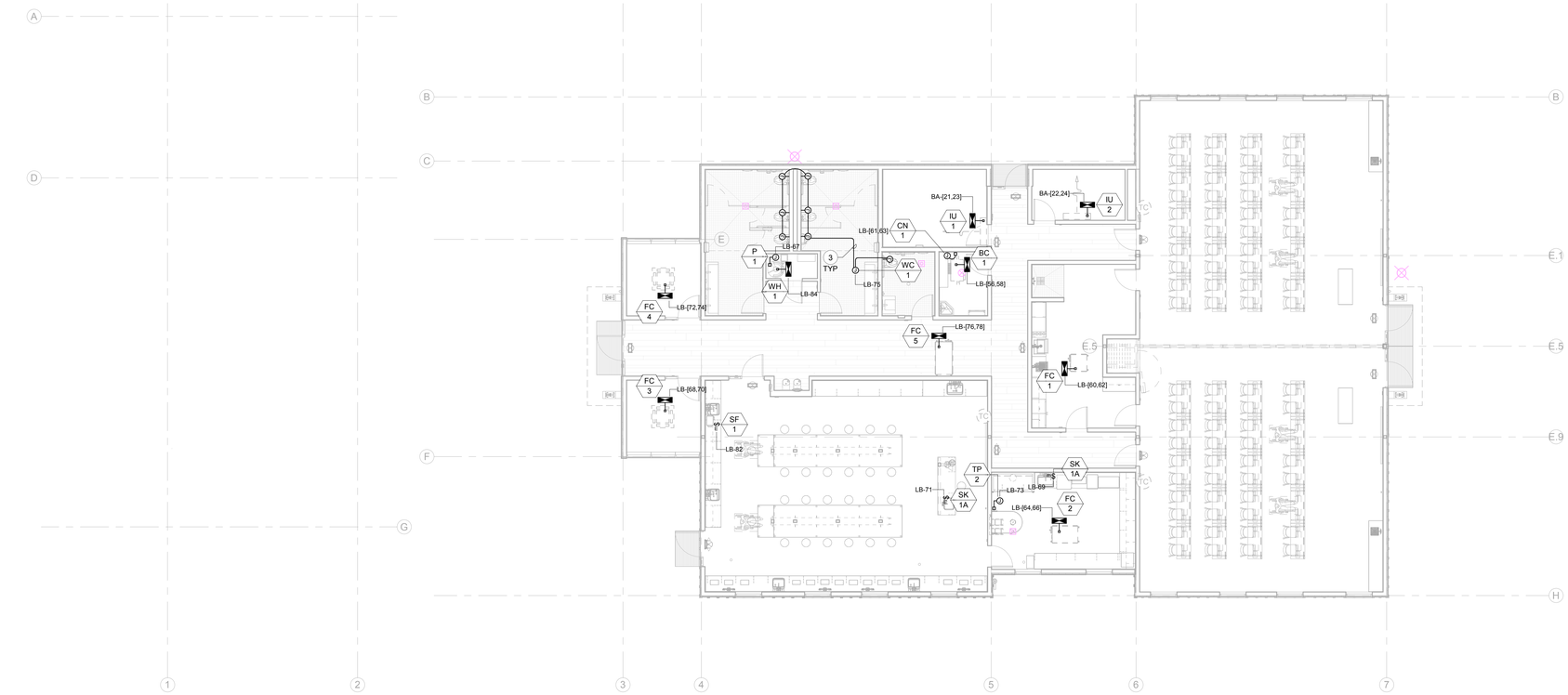

1 FLOOR PLAN - MECH/PLUM CONNECTIONS - PHASE 1
1/8" = 1'-0"

NUMBERED SHEET NOTES

1. CO-LOCATE RECEPTACLE TO BE 6' FROM NEARBY HOSE BIB.
2. REFER TO E-501 SINGLE LINE DIAGRAM FOR WIRING AND CONDUIT TO SWITCHBOARD 'MSW'.
3. CONNECT COMPLETE TO ALL FLUSH VALVE ASSEMBLIES. PROVIDE (2) #12 + (1) #12G. IN 1/2" C. THROUGH-OUT.
4. WALL PACK MOUNTED AS HIGH AS POSSIBLE TO LOW WALL. SEE SHEET E-201 FOR SWITCH LOCATION.

MECHANICAL EQUIPMENT FEEDER SCHEDULE

UNIT TYPE	UNIT #	VOLTAGE	FLA	POLES	kVA	WIRE & CONDUIT	PANEL	CKT #
BC	1	208 V	1 A	2	0.21 kVA	(2) #12 + (1) #12G. IN 1/2" C.	LB	56,58
CN	1	208 V	2 A	2	0.42 kVA	(2) #12 + (1) #12G. IN 1/2" C.	LB	61,63
EF	1	120 V	5.8 A	1	0.70 kVA	(2) #10 + (1) #10G. IN 3/4" C.	LB	57
EF	2	120 V	5.8 A	1	0.70 kVA	(2) #10 + (1) #10G. IN 3/4" C.	LB	57
EF	3	120 V	5.8 A	1	0.70 kVA	(2) #10 + (1) #10G. IN 3/4" C.	LB	59
EF	4	120 V	5.8 A	1	0.70 kVA	(2) #10 + (1) #10G. IN 3/4" C.	LB	59
EF	5	120 V	2 A	1	0.24 kVA	(2) #12 + (1) #12G. IN 1/2" C.	LD	39
FC	1	208 V	2.13 A	2	0.44 kVA	(2) #10 + (1) #10G. IN 3/4" C.	LB	60,62
FC	2	208 V	2.88 A	2	0.60 kVA	(2) #10 + (1) #10G. IN 3/4" C.	LB	64,66
FC	3	208 V	1 A	2	0.21 kVA	(2) #10 + (1) #10G. IN 3/4" C.	LB	68,70
FC	4	208 V	1 A	2	0.21 kVA	(2) #10 + (1) #10G. IN 3/4" C.	LB	72,74
FC	5	208 V	3.4 A	2	0.71 kVA	(2) #10 + (1) #10G. IN 3/4" C.	LB	76,78
HE	1	208 V	15 A	3	5.40 kVA	(3) #10 + (1) #10G. IN 3/4" C.	MSW	13
HP	1	208 V	31 A	3	11.17 kVA	(3) #8 + (1) #10G. IN 1" C.	MSW	12
HTR	-	208 V	33.3 A	3	12.00 kVA	(3) #6 + (1) #10G. IN 1" C.	LD	20,22,24
IU	1	208 V	1 A	2	0.21 kVA	(2) #10 + (1) #10G. IN 3/4" C.	BA	21,23
IU	2	208 V	1 A	2	0.21 kVA	(2) #10 + (1) #10G. IN 3/4" C.	BA	22,24
OU	1	208 V	19 A	2	3.95 kVA	(2) #10 + (1) #10G. IN 3/4" C.	BA	17,19
OU	2	208 V	19 A	2	3.95 kVA	(2) #10 + (1) #10G. IN 3/4" C.	BA	25,27
P	1	120 V	5 A	1	0.60 kVA	(2) #12 + (1) #12G. IN 1/2" C.	LB	67
P	2	120 V	5 A	1	0.60 kVA	(2) #12 + (1) #12G. IN 1/2" C.	LD	40
RTU	1	208 V	71.2 A	3	25.65 kVA	SEE SINGLE LINE DIAGRAM	MSW	6
RTU	2	208 V	50.4 A	3	18.16 kVA	SEE SINGLE LINE DIAGRAM	MSW	10
RTU	3	208 V	50.4 A	3	18.16 kVA	SEE SINGLE LINE DIAGRAM	MSW	8
RTU	4	208 V	50.4 A	3	18.16 kVA	(3) #6 + (1) #10G. IN 1" C.	LD	31,33,35
RTU PE	4	208 V	9.1 A	3	3.28 kVA	SEE SINGLE LINE DIAGRAM	LD	32,34,36
RTU PE	1	208 V	9.1 A	3	3.28 kVA	SEE SINGLE LINE DIAGRAM	MSW	7
RTU PE	2	208 V	9.1 A	3	3.28 kVA	SEE SINGLE LINE DIAGRAM	MSW	11
RTU PE	3	208 V	9.1 A	3	3.28 kVA	SEE SINGLE LINE DIAGRAM	MSW	9
SF	1	120 V	0.5 A	1	0.06 kVA	(2) #10 + (1) #10G. IN 3/4" C.	LB	82
SK	1A	120 V	7.8 A	1	0.94 kVA	(2) #12 + (1) #12G. IN 1/2" C.	LB	69
SK	1A	120 V	7.8 A	1	0.94 kVA	(2) #12 + (1) #12G. IN 1/2" C.	LB	71
TP	2	120 V	5 A	1	0.60 kVA	(2) #12 + (1) #12G. IN 1/2" C.	LB	73
WC	1	120 V	2 A	1	0.24 kVA	(2) #12 + (1) #12G. IN 1/2" C.	LB	75
WH	1	120 V	7 A	1	0.84 kVA	(2) #10 + (1) #10G. IN 3/4" C.	LB	84
WH	2	208 V	28 A	3	10.09 kVA	(3) #8 + (1) #10G. IN 1" C.	LD	43,45,47

AGENCY APPROVAL STAMP:

IDENTIFICATION STAMP
DIV. OF THE STATE ARCHITECT
APP: 01-120890 INC:
REVIEWED FOR
SS ☑ FLS ☑ ACS ☑
DATE: 10/25/2023

TLCDARCHITECTURE
520 Third St. #250
Santa Rosa, CA 95401
o: 707.525.5600
f: 707.525.5616
tlcd.com

CONSULTANT:

O'MAHONY & MYER
ELECTRICAL ENGINEERING & LIGHTING DESIGN
4340 REDWOOD HWY., SUITE 245
SAN RAFAEL, CALIFORNIA 94903
(415) 492-0420/FAX (415) 479-9662

STAMP:

REGISTERED PROFESSIONAL ENGINEER
PETER A. COLEMAN JAMES
No.E14738
Exp. 6/25
ELECTRICAL
STATE OF CALIFORNIA

REVISIONS:

Number	Date	Description

NAPA VALLEY COLLEGE WINE EDUCATION CENTER

2277 NAPA VALLEJO HWY
NAPA, CA 94558

NAPA VALLEY COLLEGE

DSA APPLICATION NUMBER:
01-120890

TLCD PROJECT NUMBER:
21062.00

DATE:
AUGUST 30, 2023

FLOOR PLANS MP CONNECTIONS - PHASE 1

E-303

© THESE DRAWINGS ARE INSTRUMENTS OF SERVICE AND ARE THE SOLE PROPERTY OF TLCD ARCHITECTURE. ANY USE WITHOUT WRITTEN CONSENT IS PROHIBITED.

30 x 42"
10/17/2023 1:06:58 PM

NAPA VALLEY COLLEGE WINE EDUCATION CENTER - 222020 R23

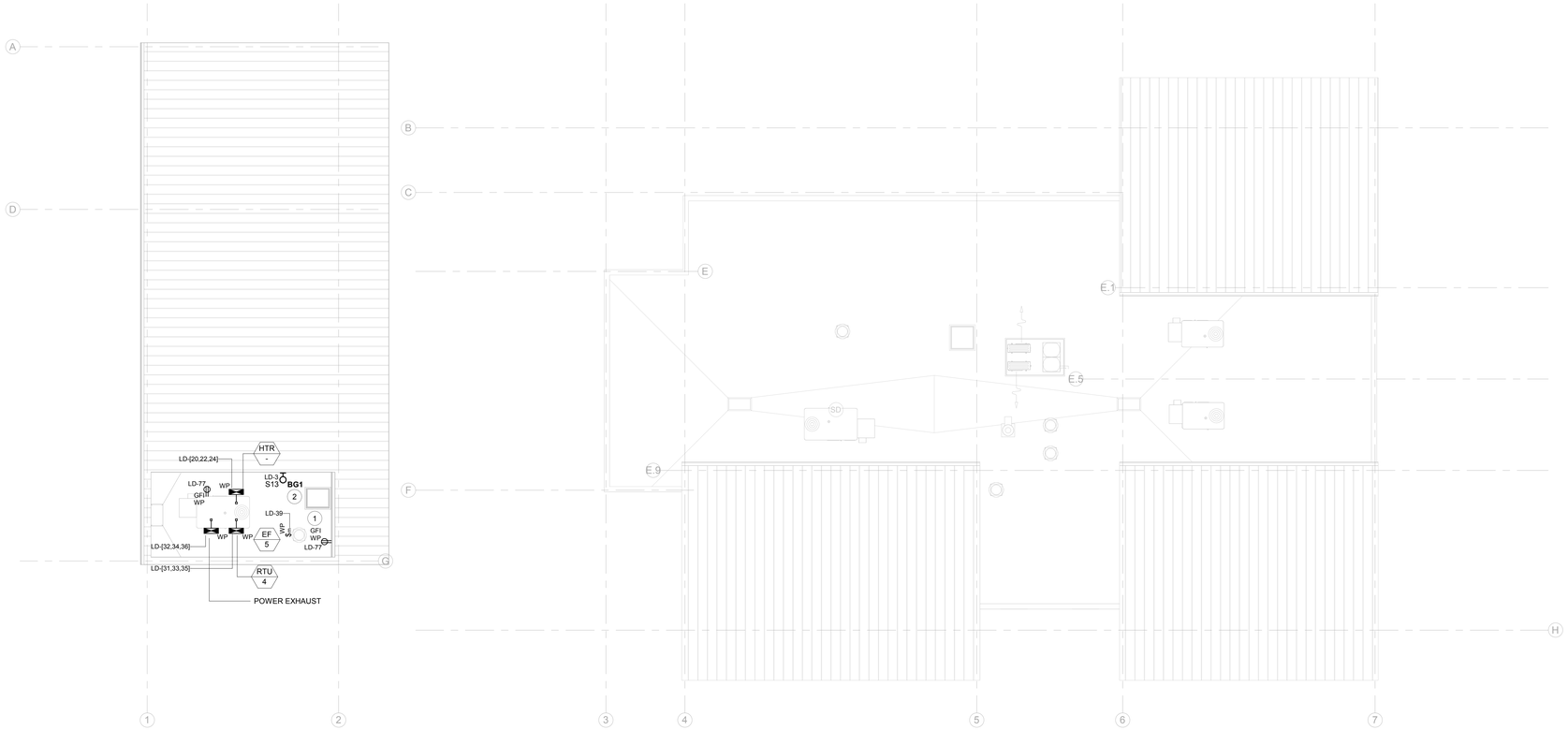

2 ROOF PLAN - ELEC & MP CONNECTIONS - PHASE 2
1/8" = 1'-0"

NUMBERED SHEET NOTES

1. CO-LOCATE RECEPTACLE TO BE 6' FROM NEARBY HOSE BIB.
2. WALL PACK MOUNTED AT 24" ABOVE FINISHED ROOF TO LOW WALL. SEE SHEET E-202 FOR SWITCH LOCATION.
3. HEAT TRACE CONTROL PANEL: PROVIDE AND INSTALL (2) #8 + (1) #10G. IN 3/4" C. AND CONNECT COMPLETE TO EQUIPMENT. COORDINATE ALL CONNECTION REQUIREMENTS WITH EQUIPMENT VENDOR PRIOR TO ROUGH-IN.
4. EXTEND (2) #12 + (1) #10G. IN 1/2" C. TO HEAT TRACE PIPE CONNECTION LOCATION. COORDINATE ALL CONNECTION REQUIREMENTS WITH EQUIPMENT VENDOR PRIOR TO ROUGH-IN.

MECHANICAL EQUIPMENT FEEDER SCHEDULE

UNIT TYPE	UNIT #	VOLTAGE	FLA	POLES	kVA	WIRE & CONDUIT	PANEL	CKT #
BC	1	208 V	1 A	2	0.21 kVA	(2) #12 + (1) #12G. IN 1/2" C.	LB	56,58
CN	1	208 V	2 A	2	0.42 kVA	(2) #12 + (1) #12G. IN 1/2" C.	LB	61,63
EF	1	120 V	5.8 A	1	0.70 kVA	(2) #10 + (1) #10G. IN 3/4" C.	LB	57
EF	2	120 V	5.8 A	1	0.70 kVA	(2) #10 + (1) #10G. IN 3/4" C.	LB	57
EF	3	120 V	5.8 A	1	0.70 kVA	(2) #10 + (1) #10G. IN 3/4" C.	LB	59
EF	4	120 V	5.8 A	1	0.70 kVA	(2) #10 + (1) #10G. IN 3/4" C.	LB	59
EF	5	120 V	2 A	1	0.24 kVA	(2) #12 + (1) #12G. IN 1/2" C.	LD	39
FC	1	208 V	2.13 A	2	0.44 kVA	(2) #10 + (1) #10G. IN 3/4" C.	LB	60,62
FC	2	208 V	2.88 A	2	0.60 kVA	(2) #10 + (1) #10G. IN 3/4" C.	LB	64,66
FC	3	208 V	1 A	2	0.21 kVA	(2) #10 + (1) #10G. IN 3/4" C.	LB	68,70
FC	4	208 V	1 A	2	0.21 kVA	(2) #10 + (1) #10G. IN 3/4" C.	LB	72,74
FC	5	208 V	3.4 A	2	0.71 kVA	(2) #10 + (1) #10G. IN 3/4" C.	LB	76,78
HE	1	208 V	15 A	3	5.40 kVA	(3) #10 + (1) #10G. IN 3/4" C.	MSW	13
HP	1	208 V	31 A	3	11.17 kVA	(3) #8 + (1) #10G. IN 1" C.	MSW	12
HTR	-	208 V	33.3 A	3	12.00 kVA	(3) #6 + (1) #10G. IN 1" C.	LD	20,22,24
IU	1	208 V	1 A	2	0.21 kVA	(2) #10 + (1) #10G. IN 3/4" C.	BA	21,23
IU	2	208 V	1 A	2	0.21 kVA	(2) #10 + (1) #10G. IN 3/4" C.	BA	22,24
OU	1	208 V	19 A	2	3.95 kVA	(2) #10 + (1) #10G. IN 3/4" C.	BA	17,19
OU	2	208 V	19 A	2	3.95 kVA	(2) #10 + (1) #10G. IN 3/4" C.	BA	25,27
P	1	120 V	5 A	1	0.60 kVA	(2) #12 + (1) #12G. IN 1/2" C.	LB	67
P	2	120 V	5 A	1	0.60 kVA	(2) #12 + (1) #12G. IN 1/2" C.	LD	40
RTU	1	208 V	71.2 A	3	25.65 kVA	SEE SINGLE LINE DIAGRAM	MSW	6
RTU	2	208 V	50.4 A	3	18.16 kVA	SEE SINGLE LINE DIAGRAM	MSW	10
RTU	3	208 V	50.4 A	3	18.16 kVA	SEE SINGLE LINE DIAGRAM	MSW	8
RTU	4	208 V	50.4 A	3	18.16 kVA	(3) #6 + (1) #10G. IN 1" C.	LD	31,33,35
RTU PE	4	208 V	9.1 A	3	3.28 kVA	SEE SINGLE LINE DIAGRAM	LD	32,34,36
RTU PE	1	208 V	9.1 A	3	3.28 kVA	SEE SINGLE LINE DIAGRAM	MSW	7
RTU PE	2	208 V	9.1 A	3	3.28 kVA	SEE SINGLE LINE DIAGRAM	MSW	11
RTU PE	3	208 V	9.1 A	3	3.28 kVA	SEE SINGLE LINE DIAGRAM	MSW	9
SF	1	120 V	0.5 A	1	0.06 kVA	(2) #10 + (1) #10G. IN 3/4" C.	LB	82
SK	1A	120 V	7.8 A	1	0.94 kVA	(2) #12 + (1) #12G. IN 1/2" C.	LB	69
SK	1A	120 V	7.8 A	1	0.94 kVA	(2) #12 + (1) #12G. IN 1/2" C.	LB	71
TP	2	120 V	5 A	1	0.60 kVA	(2) #12 + (1) #12G. IN 1/2" C.	LB	73
WC	1	120 V	2 A	1	0.24 kVA	(2) #12 + (1) #12G. IN 1/2" C.	LB	75
WH	1	120 V	7 A	1	0.84 kVA	(2) #10 + (1) #10G. IN 3/4" C.	LB	84
WH	2	208 V	28 A	3	10.09 kVA	(3) #8 + (1) #10G. IN 1" C.	LD	43,45,47

1 FLOOR PLAN - MECH/PLUM CONNECTIONS - PHASE 2
1/8" = 1'-0"

AGENCY APPROVAL STAMP:

IDENTIFICATION STAMP
DIV. OF THE STATE ARCHITECT
APP: 01-120890 INC:
REVIEWED FOR
SS ☑ FLS ☑ ACS ☑
DATE: 10/25/2023

TLCDARCHITECTURE
520 Third St. #250
Santa Rosa, CA 95401
o: 707.525.5600
f: 707.525.5616
tlcd.com

CONSULTANT:

O'MAHONY & MYER
ELECTRICAL ENGINEERING & LIGHTING DESIGN
4340 REDWOOD HWY., SUITE 245
SAN RAFAEL, CALIFORNIA 94903
(415) 492-0420/FAX (415) 479-9662

STAMP:

REGISTERED PROFESSIONAL ENGINEER
PETER A. COLEMAN JAMES
No.E14738
Exp. 6/25
ELECTRICAL
STATE OF CALIFORNIA

REVISIONS:

Number	Date	Description

NAPA VALLEY COLLEGE WINE EDUCATION CENTER

2277 NAPA VALLEJO HWY
NAPA, CA 94558

NAPA VALLEY COLLEGE

DSA APPLICATION NUMBER:
01-120890

TLCD PROJECT NUMBER:
21062.00

DATE:
AUGUST 30, 2023

FLOOR PLANS MP CONNECTIONS - PHASE 2

E-304

© THESE DRAWINGS ARE INSTRUMENTS OF SERVICE AND ARE THE SOLE PROPERTY OF TLCD ARCHITECTURE. ANY USE WITHOUT WRITTEN CONSENT IS PROHIBITED.

30 x 42"
10/17/2023 1:07:03 PM

NAPA VALLEY COLLEGE WINE EDUCATION CENTER - 222020 R23

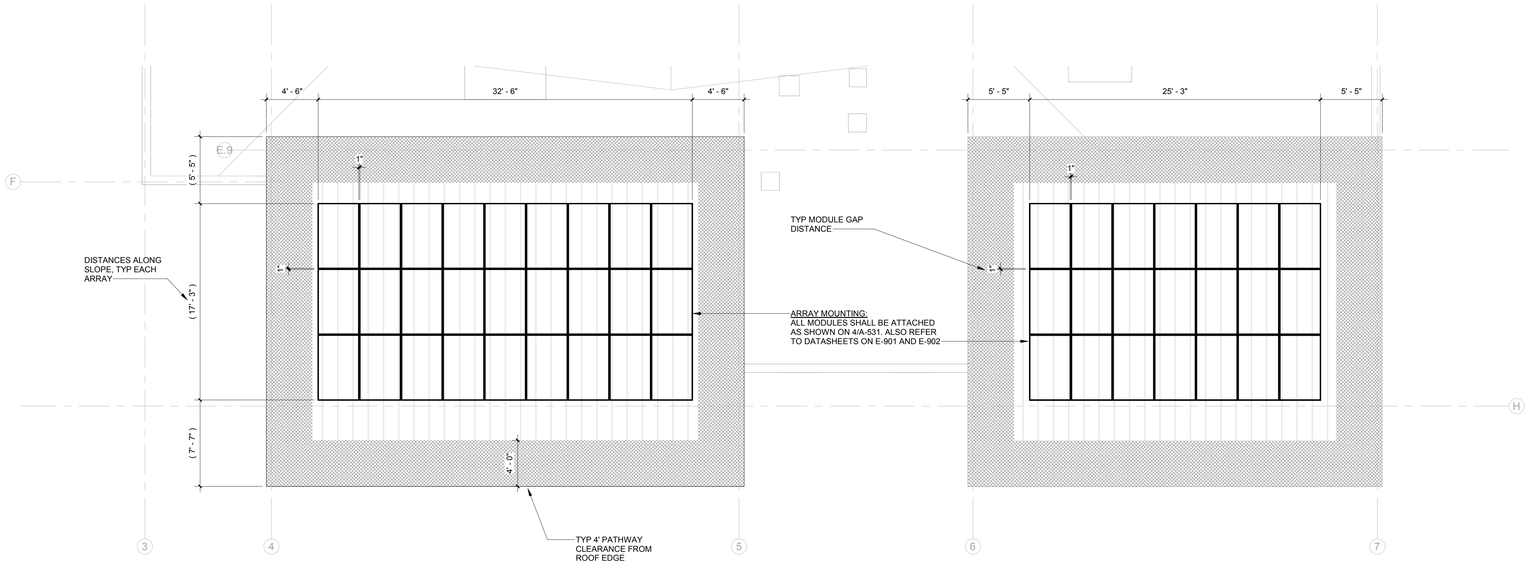

2 ENLARGED ROOF PLAN - PHOTOVOLTAIC
3/16" = 1'-0"

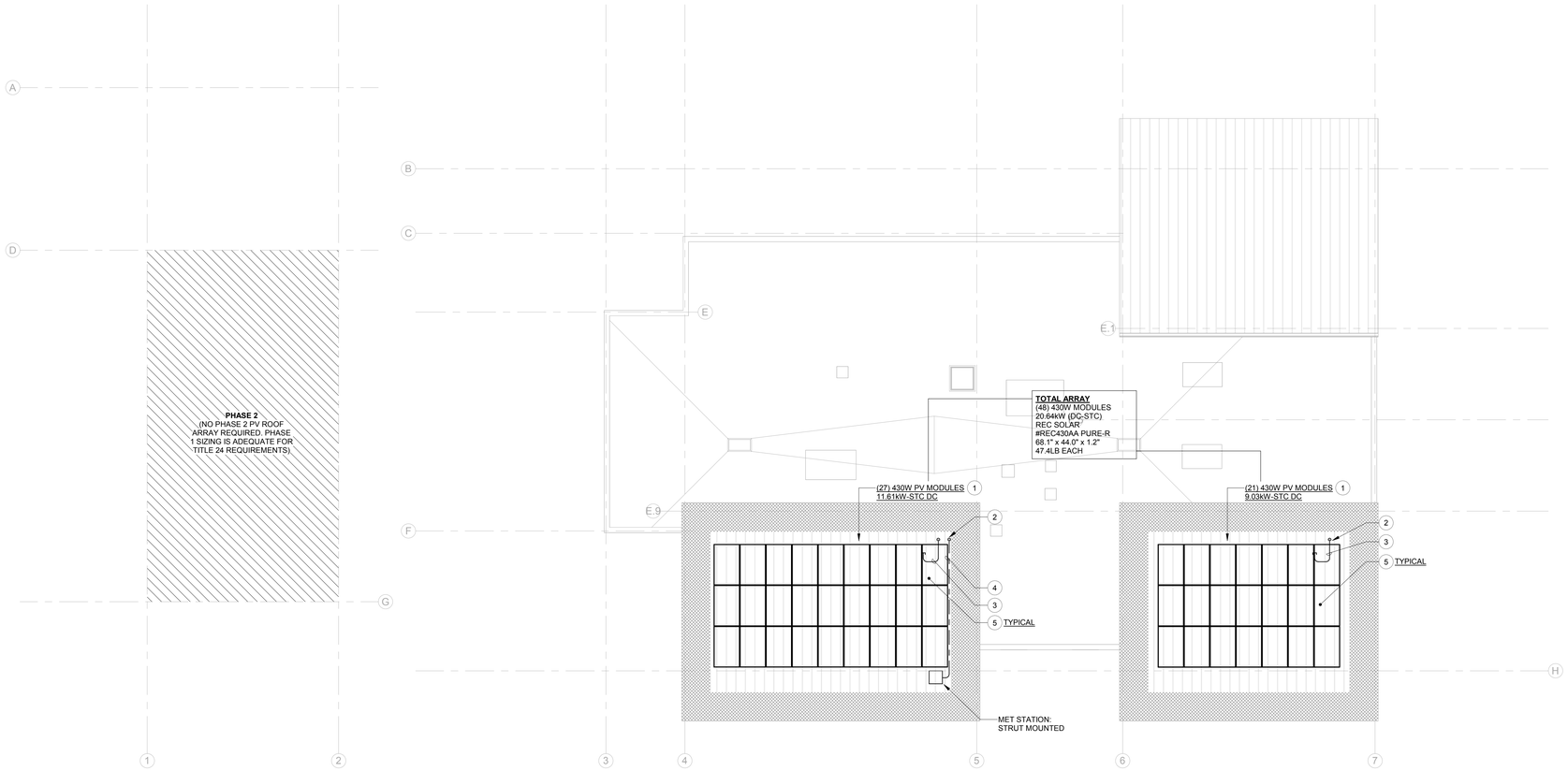

1 ROOF PLAN - PHOTOVOLTAIC - PHASE 1
1/8" = 1'-0"

NUMBERED SHEET NOTES

1. PROVIDE AND INSTALL ROOF CONDUIT PENETRATION LOCATED ADJACENT SOLAR ARRAY, WITH CONDUIT STUB TO UNDERSIDE OF PV MODULES. CONDUIT SHALL BE ROUTED SUCH THAT THE OPENING IS IN LINE WITH THE DOWNWARD SLOPE.
2. MOUNT PV MODULES TO STANDING SEAM ROOF WITH APPROVED ATTACHMENTS, PER ARCHITECTURAL AND STRUCTURAL DRAWINGS.
3. PROVIDE AND INSTALL STRING WIRING HOMERUN TO INVERTERS IN ELECTRICAL ROOM.
4. PROVIDE AND INSTALL 3/4" C. WITH RS495 WIRING FROM DAS SYSTEM TO MET STATION.
5. TYPICAL - ALL STRING WIRING SHALL BE NEATLY ARRANGED BELOW MODULES, AND SECURED AT MAXIMUM 10' INCREMENTS.

DSA IR 16-8 FIELD TESTS

5.1.3 Field Installation Quality Control Testing
All testing shall be performed by a DSA accepted Laboratory Evaluation Acceptance (LEA) laboratory approved by the Architect or Structural Engineer of Record (SEOR) and DSA for the project. The Project Inspector or designated Special Inspector shall observe the installation of all connecting devices to the seams. The approved plans shall clearly indicate the testing requirements. The load rate shall be per ICC-ES AC428 Section 3.2.5. The solar field test report shall include the number of tests performed at each building in each wind zone, any failures during testing, and any noticeable deformation after testing.

5.1.3.1 On New Roof
Field tests are required to verify proper installation of the seam connecting device. After all the connecting devices have been installed, test a minimum of 20 consecutive devices to twice the maximum allowable stress design (ASD) wind uplift load tributary to the connecting device based on the wind pressure at areas of discontinuity such as roof edges and ridges. If there is no failure in 20 consecutive tests, test 10 percent of the remaining installed connecting devices. If failure occurs before 20 consecutive successful tests are completed, then additional tests shall be performed until 20 consecutive successful tests are completed, then continue at a rate of 10 percent on the remaining installed devices. Test to 200 LB (ASD), see detail 4/A-531.

AGENCY APPROVAL STAMP:

IDENTIFICATION STAMP
DIV. OF THE STATE ARCHITECT
APP: 01-120890 INC:
REVIEWED FOR
SS ☑ FLS ☑ ACS ☑
DATE: 10/25/2023

TLCDARCHITECTURE
520 Third St. #250
Santa Rosa, CA 95401
o: 707.525.5600
f: 707.525.5616
tlcd.com

CONSULTANT:

O'MAHONY & MYER
ELECTRICAL ENGINEERING & LIGHTING DESIGN
4340 REDWOOD HWY., SUITE 245
SAN RAFAEL, CALIFORNIA 94903
(415) 492-0420/FAX (415) 479-9662

STAMP:

REGISTERED PROFESSIONAL ENGINEER
PETER A. COLEMAN JAMES
No.E14738
Exp. 6/25
ELECTRICAL
STATE OF CALIFORNIA

REVISIONS:

Number	Date	Description

NAPA VALLEY COLLEGE WINE EDUCATION CENTER

2277 NAPA VALLEJO HWY
NAPA, CA 94558

NAPA VALLEY COLLEGE

DSA APPLICATION NUMBER:
01-120890

TLCD PROJECT NUMBER:
21062.00

DATE:
AUGUST 30, 2023

ROOF PLAN PV - PHASE 1

E-305

© THESE DRAWINGS ARE INSTRUMENTS OF SERVICE AND ARE THE SOLE PROPERTY OF TLCD ARCHITECTURE. ANY USE WITHOUT WRITTEN CONSENT IS PROHIBITED.

30 x 42"
10/17/2023 1:07:07 PM

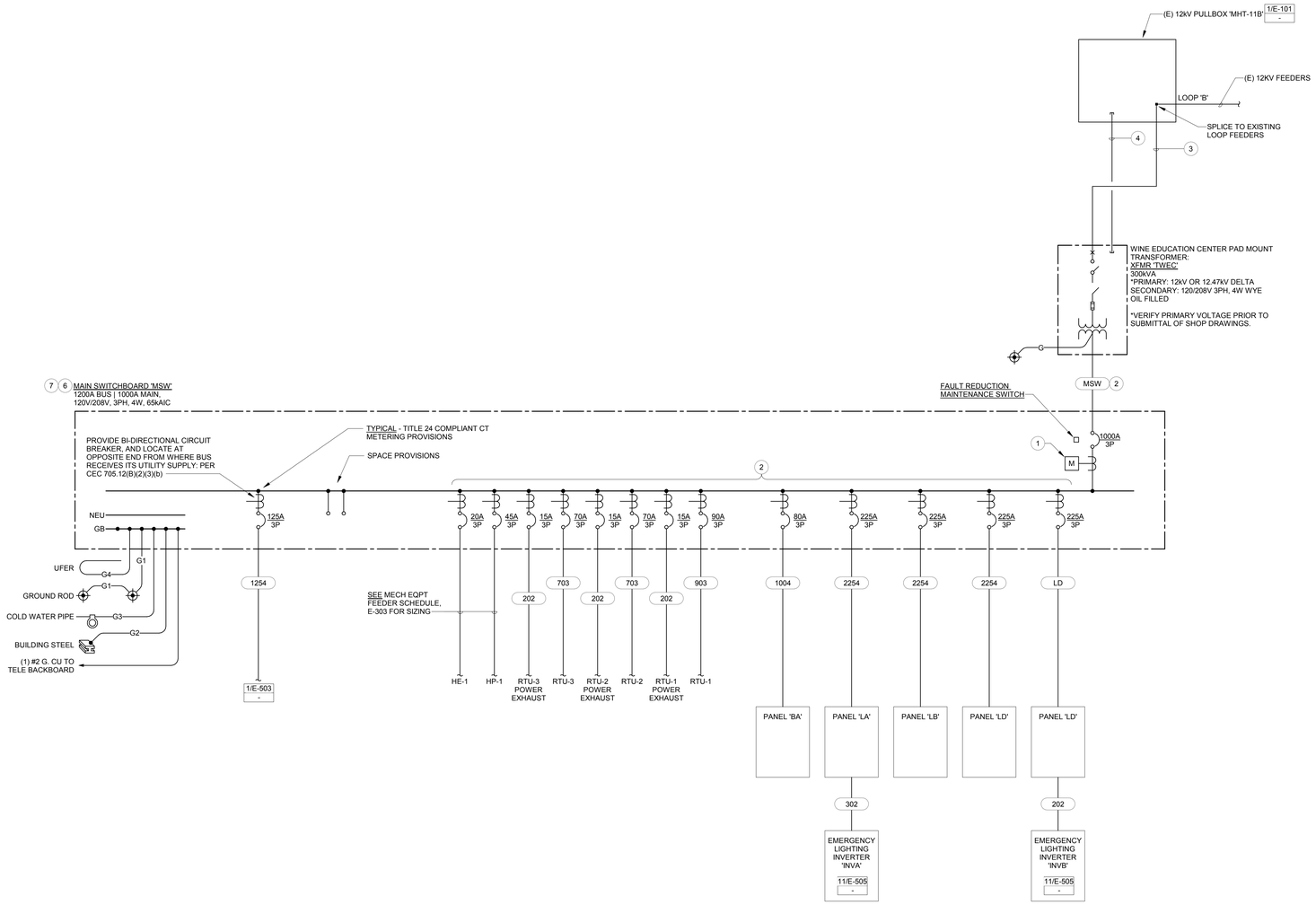

1 SINGLE LINE DIAGRAM - POWER
NO SCALE

NUMBERED SHEET NOTES

1. PROVIDE AND INSTALL SUB-METERING AND CTS (KW, KVA, & KWH).
2. PROVIDE AND INSTALL NEW SECONDARY FEEDERS.
3. PROVIDE AND INSTALL NEW 12KV PRIMARY FEEDERS: (3) #4/0 COPPER MV-105 IN 4" CONDUIT (CONCRETE ENCASED). SEE 1/E-101.
4. PROVIDE AND INSTALL 4" CONCRETE ENCASED SPARE CONDUIT.
5. PROVIDE GROUPED METERING PROVISIONS FOR HVAC LOADS CONENCTED TO THIS SWITCHBOARD.
6. ALL PV SYSTEM INTERCONNECTIONS WITH THE DISTRIBUTION SYSTEM SHALL COMPLY WITH CEC ARTICLE 690. PROVIDE AND INSTALL ALL GROUNDING AS REQUIRED BY NEC ARTICLE 250, 690, 705 AND SYSTEM MANUFACTURER.
7. PROVIDE PV SYSTEM PLACARDS AS REQUIRED BY LOCAL UTILITY COMPANY.

GENERAL NOTES

1. PER CEC 110.06, PROVIDE AND INSTALL ELECTRICAL ARC FLASH WARNING SIGNS ON ALL SWITCHBOARDS, PANELBOARDS, CONTROL PANELS, METER SOCKET ENCLOSURES, AND MOTOR CONTROLS.
2. UNDERGROUND SERVICE CONDUITS SHALL BE SEALED PER CEC 230.8.
3. BOND ALL COLD WATER PIPING SYSTEMS, GAS PIPING SYSTEMS, AND SPRINKLER PIPING SYSTEMS TO THE BUILDING GROUNDING ELECTRODE WITH (1) #4CU IN 3/4" CONDUIT. BOND WHEREVER THERE IS A BREAK IN THE CONTINUITY OF THESE SYSTEMS THROUGH-OUT THE PROJECT.

COPPER FEEDER SCHEDULE

ID	CONDUIT	CONDUCTORS
MSW	(4) 3"	(4) SETS: (4) 350 MCM & (1)#3/0 G.
LD	(1) 3"	(4) #4/0 & (1)#4 G.
4004	(1) 4"	(4) 500 MCM & (1)#1/0 G.
2254	(1) 3"	(4) #4/0 & (1)#4 G.
1254	(1) 2"	(4) #1 & (1)#6 G.
1004	(1) 2"	(4) #1 & (1)#6 G.
903	(1) 1 1/4"	(3) #2 & (1)#6 G.
703	(1) 1"	(3) #4 & (1)#8 G.
603	(1) 1"	(3) #6 & (1)#10 G.
403	(1) 3/4"	(4) #8 & (1)#10 G.
302	(1) 3/4"	(2) #8 & (1)#10 G.
202	(1) 3/4"	(2) #10 & (1)#10 G.

FEEDER TAG KEY

IG 400 4 N
- INDICATES DOUBLE NEUTRAL
- WIRE QUANTITY
- FEEDER AMPACITY
- INDICATES ISOLATED GROUND (IG)

PNL ID
- EQUIPMENT SPECIFIC FEEDER TAG

GEC SCHEDULE

G1	(1) #4/0 BARE CU TO GROUND ROD, SEE SPECS.
G2	(1) #4/0 BARE CU IN 1" C. TO BLDG STEEL, SEE SPECS.
G3	(1) #4/0 BARE CU IN 1" C. METALLIC COLD WATER SERVICE ENTRANCE, SEE SPECS.
G4	(1) #4/0 BARE CU UFER GROUND, SEE SPECS.

AGENCY APPROVAL STAMP:

IDENTIFICATION STAMP
DIV. OF THE STATE ARCHITECT
APP: 01-120890 INC:
REVIEWED FOR
SS ☑ FLS ☑ ACS ☑
DATE: 10/25/2023

TLCDARCHITECTURE
520 Third St. #250
Santa Rosa, CA 95401
o: 707.525.5600
f: 707.525.5616
tlcd.com

CONSULTANT:

O'MAHONY & MYER
ELECTRICAL ENGINEERING & LIGHTING DESIGN
4340 REDWOOD HWY., SUITE 245
SAN RAFAEL, CALIFORNIA 94903
(415) 492-0420/FAX (415) 479-9662

STAMP:

REGISTERED PROFESSIONAL ENGINEER
PETER A. COLEMAN JR.
No.E14738
Exp. 6/25
ELECTRICAL
STATE OF CALIFORNIA

REVISIONS:

Number	Date	Description

NAPA VALLEY COLLEGE WINE EDUCATION CENTER

2277 NAPA VALLEJO HWY
NAPA, CA 94558

NAPA VALLEY COLLEGE

DSA APPLICATION NUMBER:
01-120890

TLCD PROJECT NUMBER:
21062.00

DATE:
AUGUST 30, 2023

SINGLE LINE DIAGRAMS

E-501

© THESE DRAWINGS ARE INSTRUMENTS OF SERVICE AND ARE THE SOLE PROPERTY OF TLCD ARCHITECTURE. ANY USE WITHOUT WRITTEN CONSENT IS PROHIBITED.

30 x 42"
10/17/2023 1:07:11 PM

NAPA VALLEY COLLEGE WINE EDUCATION CENTER - 222020 R23

ALL EQUIPMENT SHOWN, AND AS REQUIRED FOR COMPLETE SYSTEM IS TO BE PROVIDED AND INSTALLED BY CONTRACTOR UNLESS OTHERWISE NOTED.

RACK ELEVATIONS ARE PROVIDED AS CONCEPTUAL CONFIGURATIONS. COORDINATE WITH DISTRICT FOR EXACT ARRANGEMENT.

ALL CONDUIT IS TO BE FILLED TO NO MORE THAN 35% FILL.

COMMUNICATIONS EQUIPMENT LIST

1	4" HIGH x 18" WIDE CABLE LADDER - SEE SHEET E7.1 FOR SPECIFIC REQUIREMENTS.
2	24 PORT 110 TO RJ45 PATCH PANEL FOR TERMINATION OF OSP COPPER FROM MDF BUILDING. CONNECT TO COPPER AT VAULT ON ROY PATRICK STREET. SEE E1.01.
3	2RU HORIZONTAL CABLE MANAGEMENT.
4	7'-0"H x 19" CPI 2 POST COMMUNICATIONS EQUIPMENT RACK, SEE DETAILS 8 & 9/E702.
5	4 RU HORIZONTAL CABLE MANAGEMENT.
6	110 ENTRANCE PROTECTOR BLOCKS FOR 25-PAIR COPPER BETWEEN MDF AND IDF'S.
7	SUPPORT TRAPEZE FOR CABLE LADDER CONNECTED TO STRUCTURE ABOVE WITH 3 WAY STRUT BRACING - SEE DETAIL 7 & 10/E702.
8	ANGLE SEISMIC SUPPORT BRACE FOR CABLE TRAY - SEE DETAIL 7/E702.
9	3/4" THICK PLYWOOD FROM 6" A.F.F. FLOOR TO 8'-6" A.F.F. ALONG WALLS AS SHOWN ON PLANS - SEE DETAIL 4/E702.
10	POE PATCH PANEL BY COLLEGE.
11	4" CONDUIT BETWEEN BDF AND VAULT IN ROY PATRICK STREET FOR CONNECTION BACK TO CAMPUS MDF. SEE SHEET E101
12	CAT6 CABLE BETWEEN TELECOM ROOM AND STATION DROPS. CABLE IS TO BE HOMERUN FROM STATION DROP LOCATION TO ABOVE CEILING IN 1-1/4" CONDUIT BACK TO THE BUILDING BDF RACK UTILIZING J-HOOKS. RUN CABLE IN CONDUIT ACROSS INACCESSIBLE AREAS.
13	TELECOM GROUND BUS BAR ADJACENT TO RACKS. SEE 3/E301 FOR LOCATIONS.
14	12 PORT SC TYPE FIBER TERMINATION FOR FIBER CABLING BETWEEN CAMPUS MDF & BUILDING BDF.
15	SWITCH AND/OR SERVER BY COLLEGE.
16	.4" WIDE VERTICAL WIRE MANAGERS
17	48 PORT RJ45 PATCH PANEL FOR PHASE 1 BUILDING STATION CABLES.
18	96 PORT RJ45 PATCH PANEL FOR PHASE 1 BUILDING STATION CABLES.
19	48 PORT RJ-45 PATCH PANEL FOR PHASE 2 BUILDING STATION CABLES.
20	AREA FOR LOW VOLTAGE PANELS INCLUDING 110 BLOCKS WITH ENTRANCE PROTECTION.
21	UPS BY COLLEGE.
22	48 PORT RJ-45 POE PANEL FOR CLOCK/SPEAKER SYSTEM BY COLLEGE.

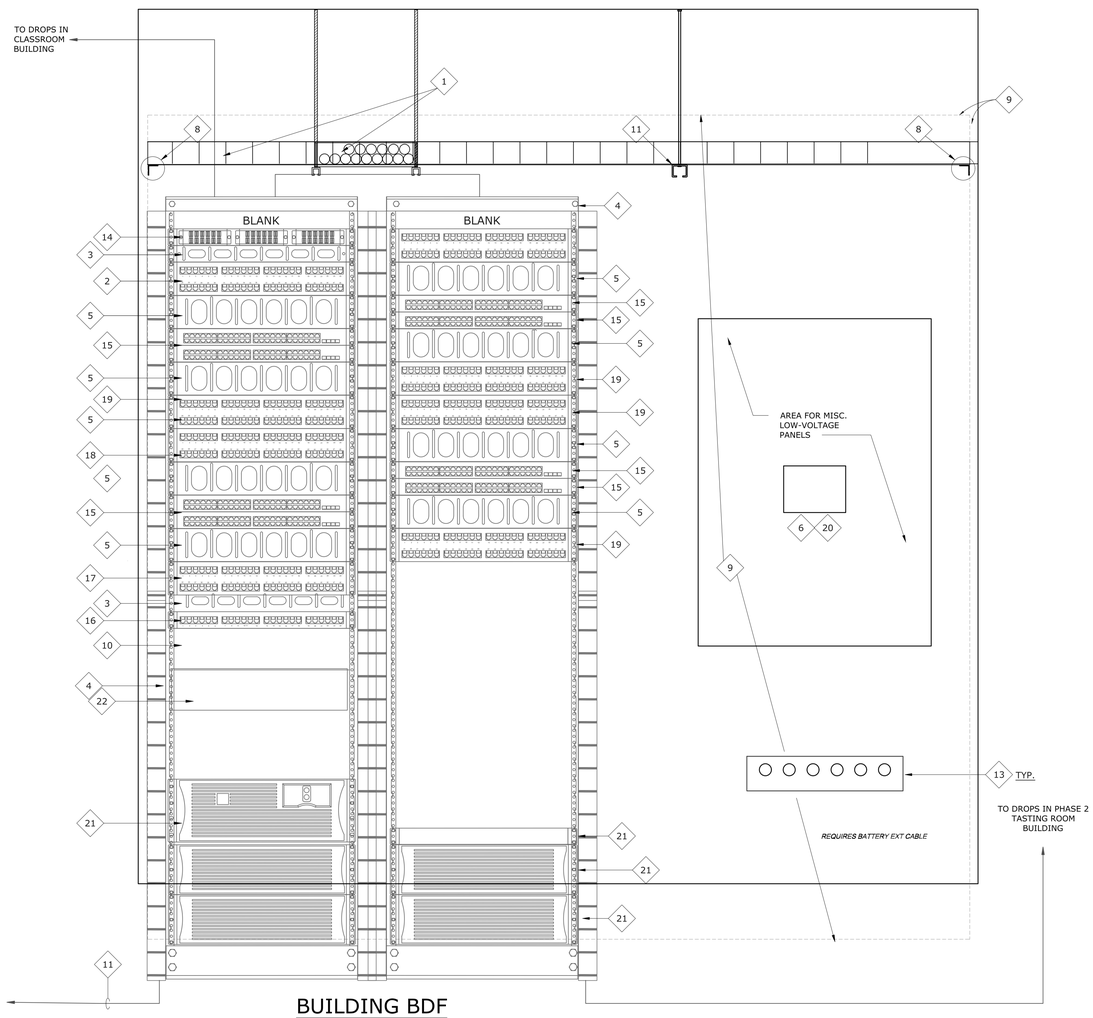

BUILDING BDF
ROOM 112

BDF RACK ELEVATION
SCALE: 1" = 1'-0"

1 / E-502

AGENCY APPROVAL STAMP:

IDENTIFICATION STAMP
DIV. OF THE STATE ARCHITECT
APP: 01-120890 INC:
REVIEWED FOR
SS ☑ FLS ☑ ACS ☑
DATE: 10/25/2023

TLCDARCHITECTURE
520 Third St. #250
Santa Rosa, CA 95401
o: 707.525.5600
f: 707.525.5616
tlcd.com

CONSULTANT:

O'MAHONY & MYER
ELECTRICAL ENGINEERING & LIGHTING DESIGN
4340 REDWOOD HWY., SUITE 245
SAN RAFAEL, CALIFORNIA 94903
(415) 492-0420/FAX (415) 479-9662

STAMP:

REGISTERED PROFESSIONAL ENGINEER
PETER A. COLEMAN JR.
No.E14738
Exp. 6/25
ELECTRICAL
STATE OF CALIFORNIA

REVISIONS:

Number	Date	Description

NAPA VALLEY COLLEGE WINE EDUCATION CENTER
2277 NAPA VALLEJO HWY
NAPA, CA 94558

NAPA VALLEY COLLEGE

DSA APPLICATION NUMBER:
01-120890

TLCD PROJECT NUMBER:
21062.00

DATE:
AUGUST 30, 2023

SINGLE LINE DIAGRAMS

E-502

© THESE DRAWINGS ARE INSTRUMENTS OF SERVICE AND ARE THE SOLE PROPERTY OF TLCD ARCHITECTURE. ANY USE WITHOUT WRITTEN CONSENT IS PROHIBITED.

30 x 42"
10/17/2023 10:17 PM

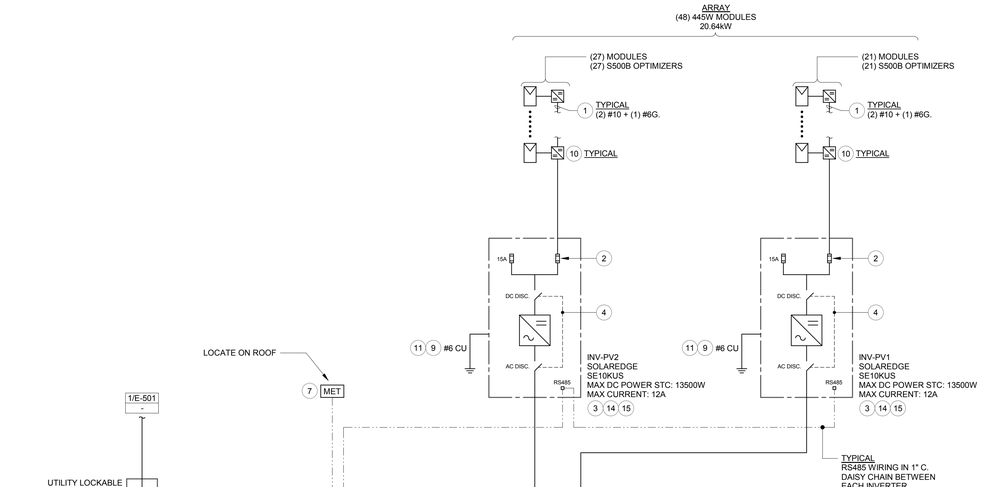

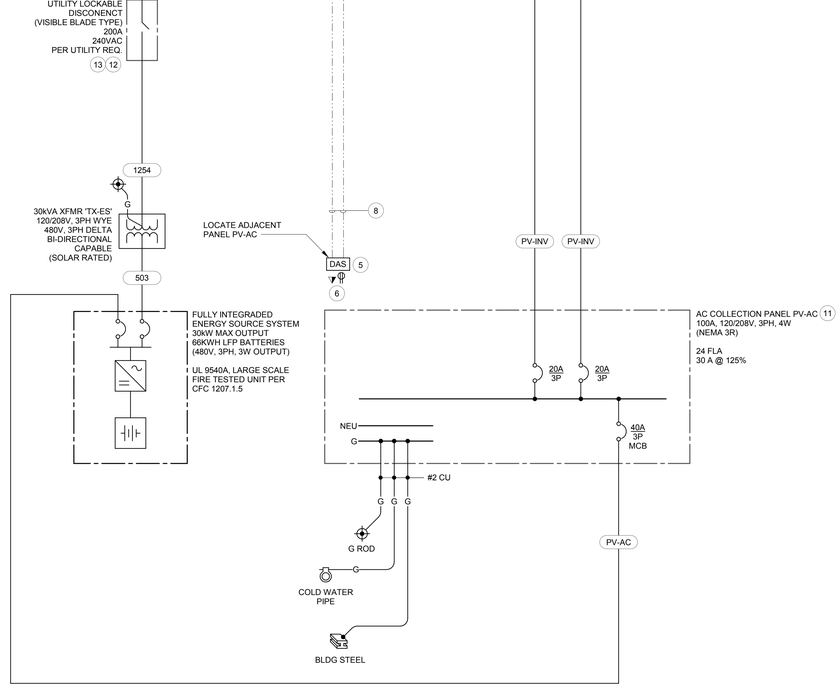

1 SINGLE LINE DIAGRAM - ENERGY STORAGE
NO SCALE

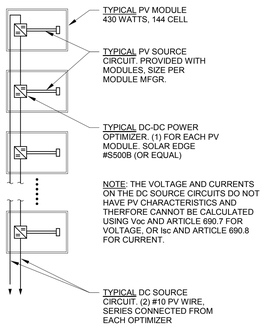

2 DC-DC OPTIMIZER DETAIL (SINGLE)
NO SCALE

NUMBERED SHEET NOTES

1. DC OUTPUT CIRCUIT FROM DC-DC OPTIMIZER TO INVERTER DC INPUT CONNECTIONS, SEE DETAIL 2, THIS SHEET. TYPICAL (2) #6 + (1)#6G. ALSO SEE GENERAL NOTES ONN SHEET E9.01 FOR WIRING MANAGMENT AND REQUIREMENTS.
2. DC INTERFACE - 1000V DC, NEMA 3R, UL 1741. PROVIDE WITH 15A FUSES IN DIN RAIL MOUNTED FUSE HOLDERS. FUSE BOX SHALL BE LOCATED ON THE ROOF ADJACENT PV INVERTER FOR DC STRING INPUT ONTO INVERTER DC BUS.
3. INVERTERS TO BE CERTIFIED WITH THE CALIFORNIA ENERGY COMMISSION AND UL1741 LISTED. INVERTER ASSEMBLY TO INCLUDE INTEGRAL AC AND DC DISCONNECTS (NOT SHOWN).
4. INVERTERS SHALL BE PROVIDED WITH A COMBINED DC AND AC DISCONNECTION MEANS. ASSEMBLY SHALL INCLUDE DC FUSES AND FUSE HOLDERS IN QUANTITIES REQUIRED.
5. PROVIDE A COMPLETE PHOTOVOLTAIC DATA ACQUISITION SYSTEM ("DAS") TO ALLOW OWNER TO REMOTELY VIEW REAL-TIME VISUAL METERS OF SYSTEM PERFORMANCE, HISTORICAL GRAPHS, LOCAL WEATHER DATA AND CUSTOM PROJECT DETAILS TO CLIENT SATISFACTION. THIS INCLUDES ALL HEAD END EQUIPMENT, SOFTWARE AND LICENSING FEES. THIS SHALL ALSO INCLUDE INSTALLATION OF ANY METROLOGICAL EQUIPMENT REQUIRED AT THE ROOF FOR WEATHER MONITORING. UTILIZE DECK MONITORING SOFTWARE OR EQUAL.
6. PROVIDE AND INSTALL FULLY TERMINATED CAT. 6 NETWORK JACK/CABLE AT DAS EQUIPMENT & 120V DUPLEX RECEPTACLE. DAS EQUIPMENT LOCATION BY SOLAR INTEGRATOR. CONFIRM EXACT LOCATION PRIOR TO ROUGH-IN.
7. PROVIDE COMPACT METEOROLOGICAL WEATHER STATION (MET) AT ROOF. COLUMBIA WEATHER SYSTEMS OR EQUAL. MET STATION SHALL BE FULLY COMPATIBLE WITH DAS EQUIPMENT, CONFIRM COMPATIBILITY PRIOR TO ROUGH-IN.
8. PROVIDE 1" RACEWAY WITH RS-485 WIRING FOR MONITORING EQUIPMENT COMMUNICATIONS. CONFIRM EXACT WIRING TYPE AND QUANTITY WITH DAS AND MET SYSTEMS SUPPLIERS PRIOR TO ROUGH-IN.
9. PROVIDE GROUNDING CONNECTION FROM INVERTER ASSEMBLY TO MAIN SWITCHBOARD GROUND BUS PER CEC 690.47 AND MANUFACTURERS INSTRUCTIONS.
10. PV SYSTEM SINGLE MODULE OPTIMIZER. OPTIMIZERS SHALL BE PROVIDED WITH INTERNAL CURRENT LIMITING FUNCTIONS AS DESCRIBED IN 690.8(B)(2) EXCEPTION 1.
11. ALL PV SYSTEM INTERCONNECTIONS WITH THE DISTRIBUTION SYSTEM SHALL COMPLY WITH CEC ARTICLE 690. PROVIDE AND INSTALL ALL GROUNDING AS REQUIRED BY NEC ARTICLE 250, 690, 705 AND SYSTEM MANUFACTURER.
12. KNIFE TYPE DISCONNECT TO BE CLEARLY LABELED "ENERGY STORAGE SYSTEM DISCONNECT" AND LOCATED WITHIN SIGHT OF THE MAIN SERVICE METER PER UTILITY COMPANY REGULATIONS. EXACT DISCONNECT TYPE SHALL BE A UTILITY CO. APPROVED PHOTOVOLTAIC DISCONNECT. COORDINATE EXACT TYPE WITH PG&E PRIOR TO ROUGH-IN.
13. PROVIDE PV SYSTEM PLACARDS AS REQUIRED BY LOCAL UTILITY COMPANY.
14. PHOTOVOLTAIC SYSTEM INVERTER, RAPID SHUT-DOWN COMPLIANT, WITH MODULE LEVEL OPTIMIZED STRING CONFIGURATIONS.

COPPER FEEDER SCHEDULE ESS

ID	CONDUIT	CONDUCTORS
PV-INV	(1) 1"	(4) #10 & (1)#10 G.
PV-AC	(1) 1"	(4) #8 & (1)#10 G.
1254	(1) 2"	(4) #1 & (1)#6 G.
503	(1) 3/4"	(3) #8 & (1)#10 G.

FEEDER TAG KEY

IG 400 4 N
- INDICATES DOUBLE NEUTRAL
- WIRE QUANTITY
- FEEDER AMPACITY
- INDICATES ISOLATED GROUND (IG)

PNL ID
- EQUIPMENT SPECIFIC FEEDER TAG

AGENCY APPROVAL STAMP:

IDENTIFICATION STAMP
DIV. OF THE STATE ARCHITECT
APP: 01-120890 INC:
REVIEWED FOR
SS ☑ FLS ☑ ACS ☑
DATE: 10/25/2023

TLCDARCHITECTURE
520 Third St. #250
Santa Rosa, CA 95401
o: 707.525.5600
f: 707.525.5616
tlcd.com

CONSULTANT:

O'MAHONY & MYER
ELECTRICAL ENGINEERING & LIGHTING DESIGN
4340 REDWOOD HWY., SUITE 245
SAN RAFAEL, CALIFORNIA 94903
(415) 492-0420/FAX (415) 479-9662

STAMP:

REGISTERED PROFESSIONAL ENGINEER
PETER A. COLEMAN JAMES
No.E14738
Exp. 6/25
ELECTRICAL
STATE OF CALIFORNIA

REVISIONS:

Number	Date	Description

NAPA VALLEY COLLEGE WINE EDUCATION CENTER

2277 NAPA VALLEJO HWY
NAPA, CA 94558

NAPA VALLEY COLLEGE

DSA APPLICATION NUMBER:
01-120890

TLCD PROJECT NUMBER:
21062.00

DATE:
AUGUST 30, 2023

SINGLE LINE DIAGRAMS- ENERGY STORAGE

E-503

© THESE DRAWINGS ARE INSTRUMENTS OF SERVICE AND ARE THE SOLE PROPERTY OF TLCD ARCHITECTURE. ANY USE WITHOUT WRITTEN CONSENT IS PROHIBITED.

30 x 42"
10/17/2023 1:07:20 PM

BATTERY (LFP) STORAGE SYSTEM

Indoor C&I Energy Storage Systems — L3066, L3077, L30143

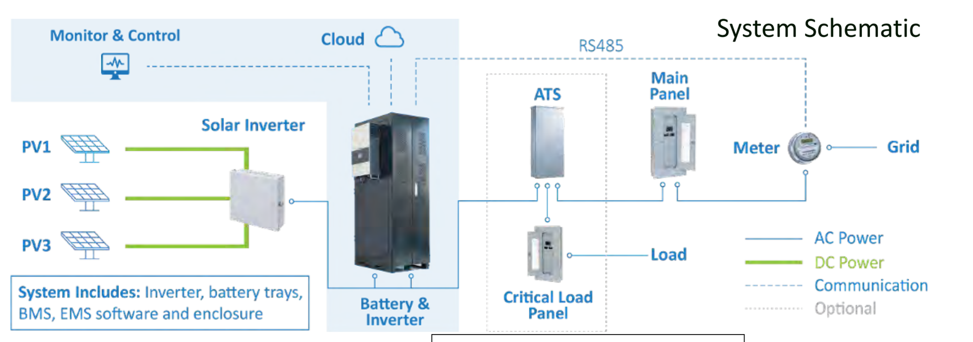

CFC 1207.5 MAX QUANTITES OF ESS
LITHIUM-ION: 600kWh

Supported Applications

Resiliency. The system provides backup power during grid outages and prevents losses.
Solar Integration. The system stores excess solar energy produced during the day for use at another time.
Time of Use. The batteries charge during times of low-cost pricing, and discharge during high-cost times.
Demand Charge Management. The system will intelligently charge and discharge to reduce peak loads.

SYSTEM DATA	L3066	L3077	L30132	L30143
AC Voltage – 3 Phase*	480V/60Hz	480V/60Hz	480V/60Hz	480V/60Hz
Continuous Power Rating (kW AC)*	30	30	30	30
Peak Power (1 min)	36	36	36	36
Usable Battery Capacity (kWh DC)	66	77	132	143
Nominal Duration of Discharge (Hours)*	2	2	4	4
Nominal Battery Voltage (Vdc)	307.2	358.4	614.4	665.6
System Round-Trip Efficiency (RTE%)**	92% @ 0.5C / 93% @0.25C			
Dimension with Inverter (D x W x H, In.)	40"x 24"x 80"		40"x 48"x 80"	
Dimension with Inverter (D x W x H, mm)	600 x 1000 x 2000		1200 x 1000 x 2000	
Weight with Inverter (lbs.)	1,945	2,154	3,741	3,951
Weight with Inverter (kg)	882	977	1,697	1,792

For All configurations	
Recommended Operating Temperature	25 °C (77 °F) +/- 5°
Operating Temperature (>45 °C operation will reduce cell life)	Charging: 0 - 55 °C (32 - 131 °F) Discharging: -20 - 55 °C (-4 - 131 °F)
Cycle Life	6000 @25°C, 0.5C, 70% EOL
Warranty	5 year standard, 10 year extended
Certification	UL1973, UL1741-SA, UL9540, UL9540A
EMS Controller	Included. Cloud-based monitoring.
Installation Location	Indoor, floor -standing
Communication Interface / Standard	Modbus TCP per Sunpec MESA

SCALABLE SOLUTIONS

The L3077 and L30143 line of Indoor C&I Energy Storage Systems are modular and scalable so that energy and power can be custom tailored. Multiple units can be paralleled to form larger systems. Example configurations:

	Units	kW	kWh
L3077	2	60	154
L3077	6	180	462
L30143	2	60	286
L30143	3	90	429

* Alternate configurations available ** AC to battery to AC @ BOL

Energport — We make energy efficient
48660 Kato Rd, Fremont, CA 94538 (510) 279-3183 Email: info@energport.com
Copyright 2021 ENERGPORT All Rights Reserved

PV MODULE OPTIMIZERS

Power Optimizer
For Residential Installations
S440 / S500 / S500B / S650B

	S440	S500	S500B	S650B	UNIT
INPUT					
Rated Input DC Power(1)	440	500		650	W
Absolute Maximum Input Voltage (Voc)	60		125	85	Vdc
MPPT Operating Range	8 – 60		12.5 – 105	12.5 - 85	Vdc
Maximum Short Circuit Current (Isc) of Connected PV Module	14.5	15			Adc
Maximum Efficiency	99.5				%
Weighted Efficiency	98.6				%
Overvoltage Category	II				
OUTPUT DURING OPERTION					
Maximum Output Current	15				Adc
Maximum Output Voltage	60		80		Vdc
OUTPUT DURING STANDBY (POWER OPTIMIZER DISCONNECTED FROM INVERTER OR INVERTER OFF)					
Safety Output Voltage per Power Optimizer	1 ± 0.1				Vdc
STANDARD COMPLIANCE(2)					
EMC	FCC Part 15 Class B, IEC61000-6-2, IEC61000-6-3, CISPR11, EN-55011				
Safety	IEC62109-1 (class II safety), UL1741				
Material	UL94 V-0, UV Resistant				
RoHS	Yes				
Fire Safety	VDE-AR-E 2100-712:2018-12				
INSTALLATION SPECIFICATIONS					
Maximum Allowed System Voltage	1000				Vdc
Dimensions (W x L x H)	129 x 155 x 30		129 x 165 x 45		mm
Weight	720		790		gr
Input Connector	MC4(3)				
Input Wire Length	0.1				m
Output Connector	MC4				
Output Wire Length	(+) 2.3, (-) 0.10				m
Operating Temperature Range(4)	-40 to +85				˚C
Protection Rating	IP68				
Relative Humidity	0 – 100				%

(1) Rated power of the module at STC will not exceed the Power Optimizer Rated Input DC Power. Modules with up to +5% power tolerance are allowed.
(2) For details about CE compliance, see Declaration of Conformity – CE.
(3) For other connector types please contact SolarEdge.
(4) Power de-rating is applied for ambient temperatures above +85°C for S440 and S500, and for ambient temperatures above +75°C for S500B. Refer to the Power Optimizers Temperature De-Rating Technical Note for details.

PV System Design Using a SolarEdge Inverter(5)		SolarEdge Home Wave Inverter Single Phase	SolarEdge Home Short String Inverter Three Phase	Three Phase for 230/400V Grid	Three Phase for 277/480V Grid	
Minimum String Length (Power Optimizers)	S440, S500	8	9	16	18	
	S500B, S650B	6	8	14		
Maximum String Length (Power Optimizers)		25	20	50		
Maximum Continuous Power per String		5700	5625	11,250	12,750	W
Maximum Allowed Connected Power per String(6) (In multiple string designs, the maximum is permitted only when the difference in connected power between strings is 2,000W or less)		6800(7)	See(6)	13,500	15,000	W
Parallel Strings of Different Lengths or Orientations		Yes				

(5) It is not allowed to mix S-series and P-series Power Optimizers in new installations in the same string.
(6) If the inverter's rated AC power ≤ maximum continuous power per string, then the maximum connected power per string will be able to reach up to the inverters maximum input DC power. Refer to the Single String Design Guidelines application note.
(7) For inverters with a rated AC power ≥ 7600W that are connected to at least two strings.

S440, S500 (Flat Bracket) — S500B, S650B (Bent Bracket)

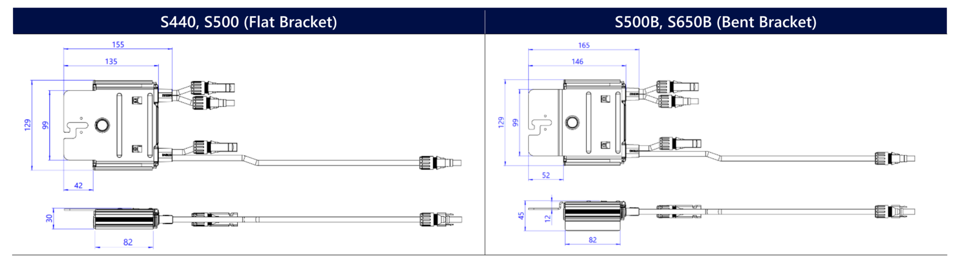

© SolarEdge Technologies, Ltd. All rights reserved. SOLAREDGE, the SolarEdge logo, OPTIMIZED BY SOLAREDGE are trademarks or registered trademarks of SolarEdge Technologies, Inc. All other trademarks mentioned herein are trademarks of their respective owners. Date: August 14, 2023 DS-000091-ENG. Subject to change without notice.
CE RoHS

PV MODULES

REC ALPHA PURE-R SERIES
PRODUCT SPECIFICATIONS
REC SOLAR'S MOST TRUSTED

GENERAL DATA	
Cell type:	80 half-cut REC bifacial, heterojunction cells with lead-free, gapless technology
Glass:	0.13 in (3.2 mm) solar glass with anti-reflective surface treatment in accordance with EN 12150
Backsheet:	Highly resistant polymer (black)
Frame:	Anodized aluminum (black)
Junction box:	4-part, 4 bypass diodes, lead-free IP68 rated, in accordance with IEC 62790
Connectors:	Stäubli MC4 PV-KBT4/KST4 (12 AWG) in accordance with IEC 62852, IP68 only when connected
Cable:	12 AWG (4 mm²) PV wire, 67 + 67 in (1.7 + 1.7 m) in accordance with EN 50618
Dimensions:	68.1 x 44.0 x 1.2 in (20.77 ft²) / 1730 x 1118 x 30 mm (1.93 m²)
Weight:	47.4 lbs (21.5 kg)
Origin:	Made in Singapore

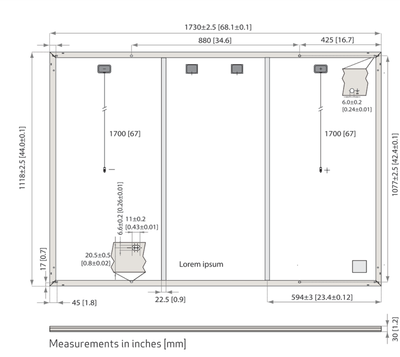

ELECTRICAL DATA		Product Code*: RECxxxAA PURE-R			
STC	Power Output - P_{MAX} (Wp)	400	410	420	430
	Watt Class Sorting - (W)	0/+10	0/+10	0/+10	0/+10
	Nominal Power Voltage - V_{MPP} (V)	48.8	49.4	50.0	50.5
	Nominal Power Current - I_{MPP} (A)	8.20	8.30	8.40	8.52
	Open Circuit Voltage - V_{OC} (V)	58.9	59.2	59.4	59.7
	Short Circuit Current - I_{SC} (A)	8.80	8.86	8.91	8.97
	Power Density (W/ft²)	19.26	19.74	20.22	20.70
	Panel Efficiency (%)	20.7	21.2	21.8	22.3
NMOT	Power Output - P_{MAX} (Wp)	305	312	320	327
	Nominal Power Voltage - V_{MPP} (V)	46.0	46.6	47.1	47.6
	Nominal Power Current - I_{MPP} (A)	6.64	6.70	6.80	6.88
	Open Circuit Voltage - V_{OC} (V)	55.5	55.8	56.0	56.3
	Short Circuit Current - I_{SC} (A)	7.11	7.16	7.20	7.24

Values at standard test conditions (STC: air mass AM 1.5, irradiance 10.75 W/sq ft (1000 W/m²), temperature 77°F (25°C), based on a production spread with a tolerance of P_{MAX}, V_{OC} & I_{SC} ±3% within one watt class. Nominal module operating temperature (NMOT: air mass AM 1.5, irradiance 800 W/m², temperature 68°F (20°C), windspeed 3.3 ft/s (1 m/s). * Where xxx indicates the nominal power class (P_{MAX}) at STC above.

CERTIFICATIONS	
IEC 61215:2016, IEC 61730:2016, UL 61730	
IEC 62804	PID
IEC 61701	Salt Mist
IEC 62716	Ammonia Resistance
UL 61730	Fire Type Class 2
IEC 62782	Dynamic Mechanical Load
IEC 61215-2:2016	Hailstone (35mm)
IEC 62321	Lead-free acc. to RoHS EU 863/2015
ISO 14001, ISO 9001, IEC 45001, IEC 62941	

TEMPERATURE RATINGS*	
Nominal Module Operating Temperature:	44°C (±2°C)
Temperature coefficient of P_{MAX}:	-0.24 %/°C
Temperature coefficient of V_{OC}:	-0.24 %/°C
Temperature coefficient of I_{SC}:	0.04 %/°C

*The temperature coefficients stated are linear values

MAXIMUM RATINGS	
Operational temperature:	-40 ... +85°C
System voltage:	1000 V
Test load (front):	+ 7000 Pa (146 lbs/ft²)*
Test load (rear):	- 4000 Pa (83.5 lbs/ft²)*
Series fuse rating:	25 A
Reverse current:	25 A

*See installation manual for mounting instructions. Design load = Test load / 1.5 (safety factor)

WARRANTY	Standard	REC ProTrust	
Installed by an REC Certified Solar Professional	No	Yes	Yes
System Size	All	≤25 kW	25-500 kW
Product Warranty (yrs)	20	25	25
Power Warranty (yrs)	25	25	25
Labor Warranty (yrs)	0	25	10
Power in Year 1	98%	98%	98%
Annual Degradation	0.25%	0.25%	0.25%
Power in Year 25	92%	92%	92%

The REC ProTrust Warranty is only available on panels purchased through an REC Certified Solar Professional installer. Warranty conditions apply. See www.recgroup.com for more details.

DELIVERY INFORMATION	
Panels per pallet:	33
Panels per 40 ft GP/high cube container:	858 (26 pallets)
Panels per 53 ft truck:	858 (26 pallets)

LOW LIGHT BEHAVIOUR
Typical low irradiance performance of module at STC:

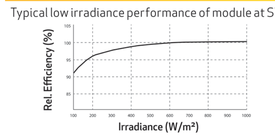

Specifications subject to change without notice.
Ref: PD-DS-AAPR Rev 3 02.23

Available from:

Founded in 1996, REC Group is an international pioneering solar energy company dedicated to empowering consumers with clean, affordable solar power. As Solar's Most Trusted, REC is committed to high quality, innovation, and a low carbon footprint in the solar materials and solar panels it manufactures. Headquartered in Norway with operational headquarters in Singapore, REC also has regional hubs in North America, Europe, and Asia-Pacific.

REC Solar PTE. LTD.
20 Tuas South Ave. 14
Singapore 637312
post@recgroup.com
www.recgroup.com

PV INVERTERS

Three Phase Inverters
For the 277/480V Grid(1) for North America
SE10KUS / SE20KUS / SE30KUS / SE33.3KUS

	SE10KUS	SE20KUS	SE30KUS	SE33.3KUS	
OUTPUT					
Rated AC Power Output	10000	20000	30000	33300	VA
Maximum AC Power Output	10000	20000	30000	33300	VA
AC Output Line Connections	4-wire WYE (L1-L2-L3-N) plus PE				
AC Output Voltage Minimum-Nominal-Maximum(2) (L-N)	244-277-305				Vac
AC Output Voltage Minimum-Nominal-Maximum(2) (L-L)	422.5-480-529				Vac
AC Frequency Min-Nom-Max(2)	59.3 - 60 - 60.5				Hz
Max. Continuous Output Current (per Phase)	12	24	36.5	40	A
GFDI Threshold	1				A
Utility Monitoring, Islanding Protection, Country Configurable Set Points	Yes				
INPUT					
Maximum DC Power (Module STC)	13500	27000	40500	45000	W
Transformer-less, Ungrounded	Yes				
Maximum Input Voltage DC to Gnd	490				Vdc
Maximum Input Voltage DC+ to DC-	980				Vdc
Nominal Input Voltage DC to Gnd	420				Vdc
Nominal Input Voltage DC+ to DC-	840				Vdc
Maximum Input Current	13.5	26.5	39	40	Adc
Maximum Input Short Circuit Current	45				Adc
Reverse-Polarity Protection	Yes				
Ground-Fault Isolation Detection	1MΩ Sensitivity		350kΩ Sensitivity(3)		
CEC Weighted Efficiency	98		98.5		%
Night-time Power Consumption	< 3		< 4		W
ADDITIONAL FEATURES					
Supported Communication Interfaces	RS485, Ethernet, ZigBee (optional)				
Rapid Shutdown – NEC 2014 and 2017 690.12	Automatic Rapid Shutdown upon AC Grid Disconnect				
RS485 Surge Protection	Supplied with the inverter				
STANDARD COMPLIANCE					
Safety	UL1741, UL1741 SA, UL1699B, CSA C22.2, Canadian AFCI according to T.I.L. M-07				
Grid Connection Standards	IEEE1547, Rule 21, Rule 14 (HI)				
Emissions	FCC part15 class B				
INSTALLATION SPECIFICATIONS					
AC output conduit size / AWG range	3/4" minimum / 12-6 AWG		3/4" minimum / 8-4 AWG		
DC input conduit size / AWG range	3/4" minimum / 12-6 AWG				
Number of DC inputs	2 pairs		3 pairs(4)		
Dimensions (H x W x D)	21 x 12.5 x 10.5 / 540 x 315 x 260				in / mm
Dimensions with Safety Switch (H x W x D)	30.5 x 12.5 x 10.5 / 775 x 315 x 260				in / mm
Weight	73.2 / 33.2		99.5 / 45		lb / kg
Weight with Safety Switch	79.7 / 36.2		106 / 48		lb / kg
Cooling	Fans (user replaceable)				
Noise	< 50		< 55		dBA
Operating Temperature Range	-40 to +140 / -40 to +60(5)				˚F / ˚C
Protection Rating	NEMA 3R				

(1) For 208V inverters refer to: http://www.solaredge.com/files/pdfs/products/inverters/se-three-phase-us-inverter-208V-datasheet.pdf
(2) For other regional settings please contact SolarEdge support
(3) Where permitted by local regulations
(4) Field replacement kit for 1 pair of inputs P/N: DCD-3PH-1TBK; Field replacement kit for 3 pairs of fuses and holders P/N: DCD-3PH-6FHK-S1
(5) For power de-rating information refer to: https://www.solaredge.com/sites/default/files/se-temperature-derating-note-na.pdf

© SolarEdge Technologies, Inc. All rights reserved. SOLAREDGE, the SolarEdge logo, OPTIMIZED BY SOLAREDGE are trademarks or registered trademarks of SolarEdge Technologies, Inc. All other trademarks mentioned herein are trademarks of their respective owners. Date: 12/2018/V01/ENG NAM. Subject to change without notice.
CE RoHS

REQUIRED PLACARDS

7 1/2" x 1 1/8"

**PHOTOVOLTAIC CIRCUITS ONLY
NO ADDITIONAL CIRCUITS ALLOWED**

NOTES:
1. LOCATE AT ALL PHOTOVOLTAIC AC COLLECTION PANELS.
2. RED BACKGROUND, REFLECTIVE WHITE LETTERING (MIN. 3/8" TEXT)
3. LABELS SHALL BE UV SUN RESISTANT, WITH ADHESIVE SUITABLE FOR OUTDOOR ENVIRONMENT.

4" x 1 1/2"

CC-01

NOTES:
1. LOCATE AT ALL CHARGE CONTROLLERS OR BATTERIES.
2. BLACK BACKGROUND, REFLECTIVE WHITE LETTERING (MIN. 3/4" TEXT)
3. LABELS SHALL BE UV SUN RESISTANT, WITH ADHESIVE SUITABLE FOR OUTDOOR ENVIRONMENT.
4. APPLY EQUIPMENT ID SHOWN ON PLANS TO EACH INVERTER LABEL.

6 1/4" x 1 1/8"

**CAUTION: ENERGY STORAGE
SYSTEM CONNECTED**

NOTES:
1. LOCATE AT ALL TENANT METER/MAIN DISCONNECTS.
2. RED BACKGROUND, REFLECTIVE WHITE LETTERING (MIN. 3/8" TEXT)
3. LABELS SHALL BE UV SUN RESISTANT, WITH ADHESIVE SUITABLE FOR OUTDOOR ENVIRONMENT.

4" x 1"

**PV SYSTEM
DISCONNECT**

NOTES:
1. LOCATE AT ALL CHARGE CONTROLLER DISCONNECTS.
2. RED BACKGROUND, REFLECTIVE WHITE LETTERING (MIN. 1/4" TEXT)
3. LABELS SHALL BE UV SUN RESISTANT, WITH PERMANENT ADHESIVE BOND SUITABLE FOR SURFACE MATERIAL APPLICATION.
4. REFERENCE: CEC 690.15

5 3/4" x 1 1/8"

WARNING: BATTERY CIRCUIT

NOTES:
1. LOCATE AT 10' INCREMENTS ALONG ALL EXPOSED BATTERY SYSTEM CONDUIT RUNS.
2. LOCATE AT ALL COVERS, ENCLOSURES, J-BOXES AND CONDUIT BODIES.
3. RED BACKGROUND, REFLECTIVE WHITE LETTERING (MIN. 3/8" TEXT)
4. LABELS SHALL BE UV SUN RESISTANT, WITH PERMANENT ADHESIVE BOND SUITABLE FOR SURFACE MATERIAL APPLICATION.

4" x 1"

**ENERGY STORAGE
SYSTEM DISCONNECT**

NOTES:
1. LOCATE AT EACH CIRCUIT BREAKER CONNECTION TO TENANT PANEL.
2. RED BACKGROUND, REFLECTIVE WHITE LETTERING (MIN. 1/4" TEXT)
3. LABELS SHALL BE UV SUN RESISTANT, WITH ADHESIVE SUITABLE FOR OUTDOOR ENVIRONMENT.
4. REFERENCE: CEC 706.15(C)

4" x 3 1/8"

**DIRECT CURRENT
PHOTOVOLTAIC
POWER SOURCE**

MAXIMUM VOLTAGE:
1000 VDC

MAXIMUM CIRCUIT CURRENT:
17 AMPS

NOTES:
1. LOCATE AT ALL INVERTERS.
2. RED BACKGROUND, REFLECTIVE WHITE LETTERING (MIN. 1/4" & 1/8" TEXT)
3. LABELS SHALL BE UV SUN RESISTANT, WITH ADHESIVE SUITABLE FOR OUTDOOR ENVIRONMENT.
4. REFERENCE: CEC 690.53

5 3/4" x 1 1/8"

**WARNING: PHOTOVOLTAIC
POWER SOURCE**

NOTES:
1. LOCATE AT 10' INCREMENTS ALONG ALL EXPOSED PHOTOVOLTAIC SYSTEM CONDUIT RUNS.
2. LOCATE AT ALL COVERS, ENCLOSURES, J-BOXES AND CONDUIT BODIES.
3. RED BACKGROUND, REFLECTIVE WHITE LETTERING (MIN. 3/8" TEXT)
4. LABELS SHALL BE UV SUN RESISTANT, WITH PERMANENT ADHESIVE BOND SUITABLE FOR SURFACE MATERIAL APPLICATION.
5. REFERENCE: CEC 690.31(G)

6" x 1"

**RAPID SHUTDOWN SWITCH FOR
SOLAR PV SYSTEM**

NOTES:
1. LOCATE WITHIN 3' OF RAPID SHUTDOWN SWITCH.
2. RED BACKGROUND, REFLECTIVE WHITE LETTERING (MIN. 1/4" TEXT)
3. LABELS SHALL BE UV SUN RESISTANT, WITH ADHESIVE SUITABLE FOR OUTDOOR ENVIRONMENT.
4. REFERENCE: CEC 690.56(C)(3)

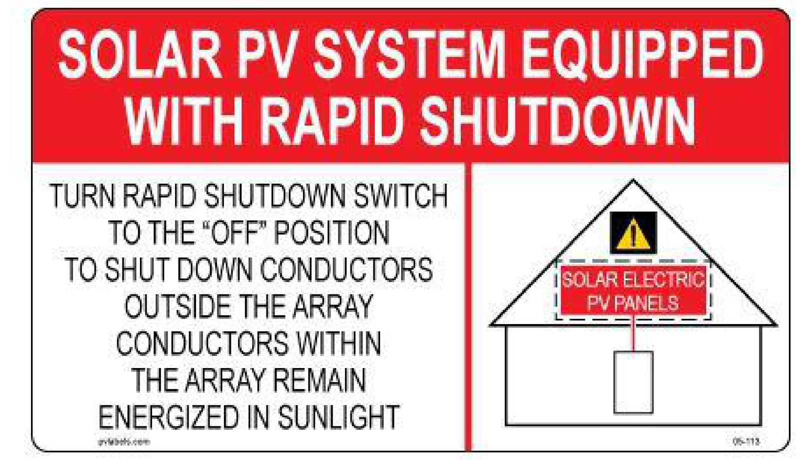

NOTES:
1. LOCATE NOT MORE THAN 3' FROM THE SERVICE DISCONNECTING MEANS.
2. RED BACKGROUND, REFLECTIVE WHITE LETTERING (MIN. 3/8" & 3/16" TEXT)
3. LABELS SHALL BE UV SUN RESISTANT, WITH PERMANENT ADHESIVE BOND SUITABLE FOR SURFACE MATERIAL APPLICATION.
4. REFERENCE: CEC 690.56(C)(1)

1 REQUIRED PLACARDS
12" = 1'-0"

30 x 42" 10/17/2023 1:07:25 PM

AGENCY APPROVAL STAMP:
IDENTIFICATION STAMP
DIV. OF THE STATE ARCHITECT
APP: 01-120890 INC:
REVIEWED FOR
SS ☑ FLS ☑ ACS ☑
DATE: 10/25/2023

TLCDARCHITECTURE
520 Third St. #250
Santa Rosa, CA 95401
o: 707.525.5600
f: 707.525.5616
tlcd.com

CONSULTANT:
O'MAHONY & MYER
ELECTRICAL ENGINEERING & LIGHTING DESIGN
4340 REDWOOD HWY., SUITE 245
SAN RAFAEL, CALIFORNIA 94903
(415) 492-0420/FAX (415) 479-9662

STAMP:
REGISTERED PROFESSIONAL ENGINEER PIETER J. COLENBRANDER No.E14738 Exp. 6/25 ELECTRICAL STATE OF CALIFORNIA

REVISIONS:

Number	Date	Description

NAPA VALLEY COLLEGE WINE EDUCATION CENTER
**2277 NAPA VALLEJO HWY
NAPA, CA 94558**

NAPA VALLEY COLLEGE

DSA APPLICATION NUMBER: 01-120890
TLCD PROJECT NUMBER: 21062.00
DATE: AUGUST 30, 2023

PLACARDS & DATASHEETS

E-504

© THESE DRAWINGS ARE INSTRUMENTS OF SERVICE AND ARE THE SOLE PROPERTY OF TLCD ARCHITECTURE; ANY USE WITHOUT WRITTEN CONSENT IS PROHIBITED.

NAPA VALLEY COLLEGE WINE EDUCATION CENTER - 222020 R23

INVERTER UNIT SPECIFICATIONS

1. ALL EMERGENCY SOURCE CIRCUITS SHALL BE INSTALLED IN SEPARATE RACEWAYS (FROM NORMAL POWER), PER 2017 NEC 700.10(B), OR APPLICABLE CODE AT THE TIME OF PERMITTING.
2. REFER ALSO TO SPECIFICATIONS SECTION 265101. UNITS SHALL BE MYERS ILLUMINATOR SERIES LV OR APPROVED EQUAL.
   A. PHASE 1 'INVA': LV-5-R-1-B2002-2-S
   B. PHASE 2 'INV2': LV-3-R-1-B2002-2-S
3. UNITS SHALL BE 120/208V 1PH 2W INPUT, 120V OUTPUT WITH 20AMP OUTPUT CIRCUIT BREAKER, RATED AS FOLLOWS:
   A. PHASE 1 'INVA': 1.1kVA
   B. PHASE 1 'INVB': 0.55kVA
4. INPUT SHALL BE EQUIPPED WITH ANSI 62.41 SURGE PROTECTION AND 1HZ NOMINAL SYNCHRONIZING SLEW RATE.
5. OUTPUT VOLTAGE STATIC REGULATION SHALL BE +/- 5% FOR 100% RESISTIVE LOAD.
6. OUTPUT DISTORTION SHALL BE 5% THD MAXIMUM.
7. OVERLOAD RATING: 150% MOMENTARY; 120% FOR 5 MINUTES.
8. TRANSFER TIME: NO BREAK.
9. BATTERY SHALL BE SEALED LEAD CALCIUM, 10 YEAR LIFE, 90 MINUTE RUN TIME, WITH AUTO-DISCONNECT FOR LOW BATTERY VOLTAGE.
10. PROVIDE RS232 PORT FOR EXTERNAL COMMUNICATIONS.
11. INVERTER SHALL BE PWM TYPE.
12. PROVIDE INTERNAL MAINTENANCE BYPASS.
13. PROVIDE IN NEMA 1 ENCLOSURE, FRONT ACCESS ONLY.
14. PROVIDE FACTORY STARTUP AND TEST OF UNIT TO THE SATISFACTION OF BUILDING INSPECTION AUTHORITIES AND WITH MAXIMUM 4 HOURS OF PERSONNEL TRAINING FOLLOWING STARTUP.
15. AUTO SELF TESTING.
16. PROVIDE (4) OUTPUT CIRCUIT BREAKERS RATED 20AMPS EACH WITH DEDICATED CIRCUITS FOR EACH OF THE EMERGENCY LIGHTING LOADS:
    A. 'INVA': 2 OUTPUT BREAKERS
    B. 'INVB': 2 OUTPUT BREAKERS
17. CBC 2019 SPECIAL SEISMIC CERTIFICATION.
18. REMOTE STATUS PANEL.
19. SUBMIT FOR REVIEW AND APPROVAL.

LOW VOLTAGE RELAY LIGHTING CONTROL PANEL LCPA

ZONE/SWITCH DESIGNATION	RELAY NO.	LINE VOLTAGE CIRCUIT	LOAD VA	ROOM NAME / FIXTURE TYPE	MASTER SWITCH ZONE GROUP	NOTES	PROGRAM CHANNEL
S1	1	LA-9	210	POLE AREA LIGHT		2	
S2	2	LA-9	72	BOLLARD		2	
S3	3	LA-9	72	BOLLARD		1	
S4	4	LA-9	123	STAKE FLOOD LIGHT		1	
S5*	5	LA-9	60	EXTERIOR BUILDING LIGHT PHASE 1		2,3	
S6*	6	LA-9	284	EXTERIOR BUILDING LIGHT PHASE 1		1,3	
S12	7	LA-9	100	ILLUMINATED SIGN PHASE 1		2	
S14	8	LA-9	33	ROOF LIGHT			
	9			SPARE			

NOTES:
1 PROVIDE AN ASTRO-DIAL MASTER CHANNEL; ASTRO-ON, TIMECLOCK-OFF.
RELAYS NOTED SHALL BE AUTOMATICALLY CONTROLLED BY THE RESPECTIVE ASTRO CHANNEL FOR EXTERIOR CONTROL.
2 PROVIDE AN ASTRO-DIAL MASTER CHANNEL; ASTRO-ON, ASTRO-OFF.
RELAYS NOTED SHALL BE AUTOMATICALLY CONTROLLED BY THE RESPECTIVE ASTRO CHANNEL FOR EXTERIOR CONTROL.
*3 PROVIDE (1) EMERGENCY LIGHTING CONTROL MODULE FOR EACH RELAY INDICATED WITH AN ASTERISK.
SEE TYPICAL SWITCHED EMERGENCY LIGHT FIXTURE CONNECTION DETAIL ON E-505.

LOW VOLTAGE RELAY LIGHTING CONTROL PANEL LCPB

ZONE/SWITCH DESIGNATION	RELAY NO.	LINE VOLTAGE CIRCUIT	LOAD VA	ROOM NAME / FIXTURE TYPE	MASTER SWITCH ZONE GROUP	NOTES	PROGRAM CHANNEL
S7*	1	LD-3	90	EXTERIOR BUILDING LIGHT PHASE 2		2,3	
S8	2	LD-3	102	EXTERIOR BUILDING LIGHT PHASE 2		1	
S9	3	LD-3	100	ILLUMINATED SIGN		2	
S10	4	LD-3	87	CANOPY LIGHTS		1	
S11	5	LD-3	179	CANOPY LIGHTS		1	
S13	6	LD-3	11	ROOF LIGHT		1	
	7			SPARE			
	8			SPARE			
aa*	9	LD-1	348	TASTING DOWNLIGHTS			
ab	10	LD-1	57	TASTING DECORATIVE			
ac	11	LD-1	230	TASTING WALL SCONCE			
ad	12	LD-1	99	TASTING COUNTER			
	13			SPARE			
	14			SPARE			
	15			SPARE			
	16			SPARE			
	17			SPARE			
	18			SPARE			
	19			SPARE			
	20			SPARE			
	21			SPARE			
	22			SPARE			
	23			SPARE			
	24			SPARE			

NOTES:
1 PROVIDE AN ASTRO-DIAL MASTER CHANNEL; ASTRO-ON, TIMECLOCK-OFF.
RELAYS NOTED SHALL BE AUTOMATICALLY CONTROLLED BY THE RESPECTIVE ASTRO CHANNEL FOR EXTERIOR CONTROL.
2 PROVIDE AN ASTRO-DIAL MASTER CHANNEL; ASTRO-ON, ASTRO-OFF.
RELAYS NOTED SHALL BE AUTOMATICALLY CONTROLLED BY THE RESPECTIVE ASTRO CHANNEL FOR EXTERIOR CONTROL.
*3 PROVIDE (1) EMERGENCY LIGHTING CONTROL MODULE FOR EACH RELAY INDICATED WITH AN ASTERISK.
SEE TYPICAL SWITCHED EMERGENCY LIGHT FIXTURE CONNECTION DETAIL ON E-505.

ROOM TYPE	OCC SENSOR: AUTO ON[1]	MANUAL ON[2]	AUTO OFF[1]	PARTIAL OFF AT NORMAL HOURS	AUTO OFF AFTER HOURS (MAX 20MIN)	PHOTOCELL: AUTO OFF @ TARGET FC	AUTO DIM @ TARGET FC	SET LEVEL TO 50 FC	DIMMING: CONTINUOUS[3]	STEP[3]	MULTI ZONE[4]	TIME CLOCK: TIME ON[5]	TIME OFF[5]	ASTRONOMICAL TIME CLOCK	SWITCHES: WALL SWITCH	DIMMER SWITCH	½ SCENE CONTROL	SYSTEM: PLUG LOAD	NETWORK	STAND-ALONE	CURRENT MONITORING[6]	AUXILIARY RELAY	REMOTE SIGNAL CONTROL	DEMAND RESPONSE
NAPA VALLEY COLLEGE WINE EDUCATION CENTER																								
Classroom / Lab		●	20 min					●	●		●					●				●				
Office		●	20 min						●							●		●		●				
Prep		●	20 min					●	●							●				●				
Electrical Room / BDF															●									
Corridor, Stairwell	100%			50% 20 min	20 min				●							●				●				
Restroom	100%		20 min												●					●				
Restroom Single Stall	100%		20 min												●					●				
Custodian	100%		20 min												●					●				
Tasting									●		●	10 AM	10 PM			●				●				
Exterior Building Zones S1, S2, S5, S7												Dusk	Dawn	●	●				●					
Exteneior Building Zone S3, S6, S8												Dusk	12:00 AM	●	●				●					
Tree Uplights Zone S4												Dusk	12:00 AM	●	●				●					
Sign Zones S9, S12												Dusk	Dawn	●	●				●					
Patio S10, S11												Dusk	10:00 PM	●	●				●					
Roof S13, S14													10:00 PM	●	●									

VERIFY EXACT SCHEDULES WITH OWNER PRIOR TO

SEQUENCE OF OPERATIONS

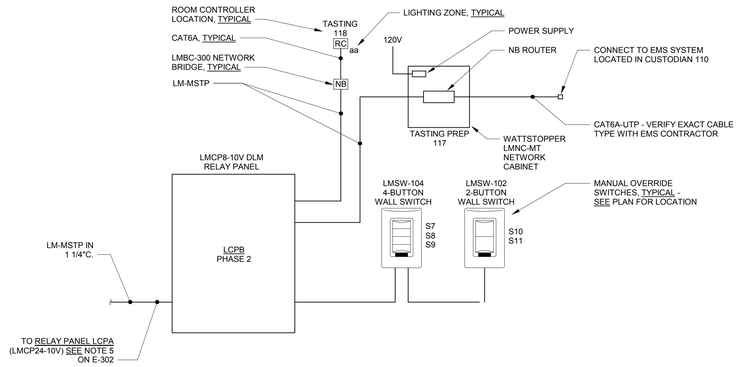

3B LLCWO08C - RELAY PANEL LCPB & ROOM CONTROLLER WIRING DIAGRAM
12" = 1'-0"

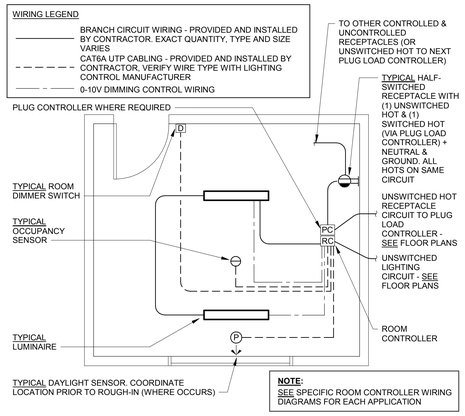

1 TYPICAL ROOM CONTROL DIAGRAM
NOT TO SCALE

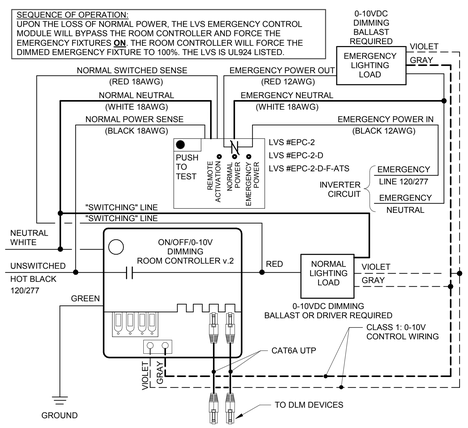

4 EMERGENCY LIGHING CONTROL MODULE WIRING DIAGRAM FOR DIMMED EMERGENCY FIXTURES CONTROLLED BY 0-10V DIMMING ROOM CONTROLLER
NOT TO SCALE

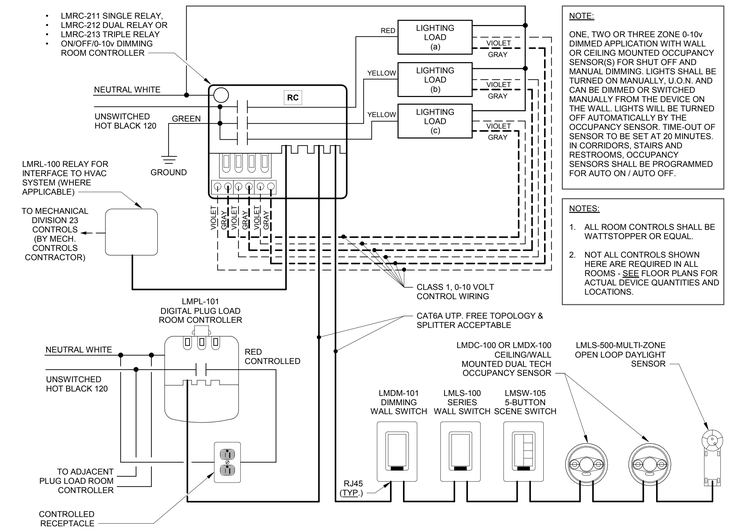

NOTE:
ONE, TWO OR THREE ZONE 0-10v DIMMED APPLICATION WITH WALL OR CEILING MOUNTED OCCUPANCY SENSOR(S) FOR SHUT OFF AND MANUAL DIMMING. LIGHTS SHALL BE TURNED ON MANUALLY, U.O.N. AND CAN BE DIMMED OR SWITCHED MANUALLY FROM THE DEVICE ON THE WALL. LIGHTS WILL BE TURNED OFF AUTOMATICALLY BY THE OCCUPANCY SENSOR. TIME-OUT OF SENSOR TO BE SET AT 20 MINUTES. IN CORRIDORS, STAIRS AND RESTROOMS, OCCUPANCY SENSORS SHALL BE PROGRAMMED FOR AUTO ON / AUTO OFF.

NOTES:
1. ALL ROOM CONTROLS SHALL BE WATTSTOPPER OR EQUAL.
2. NOT ALL CONTROLS SHOWN HERE ARE REQUIRED IN ALL ROOMS - SEE FLOOR PLANS FOR ACTUAL DEVICE QUANTITIES AND LOCATIONS.

2 LLCWO11 - ONE, TWO, OR THREE ZONE ROOM & PLUG CONTROLLER
12" = 1'-0"

EXTERIOR LIGHTING:
1. EXTERIOR LIGHTING CONTROLS (ZONES S1-S12) TO BE PROVIDED BY 2 WATTSTOPPER LMCP RELAY PANELS WITH AN NB-ROUTER INTERFACE. THIS WILL PROVIDE A NATIVE BACNET/IP INTEGRATION BETWEEN THE LIGHTING CONTROL LMCP RELAY PANELS AND THE COLLEGE EMS SYSTEM. ALL EMS PROGRAMMING TO BE PROVIDED BY THE BAS SYSTEM CONTRACTOR.
2. ALL PROGRAMMING, LABELING, AND TRAINING FOR EXTERIOR LIGHTING CONTROLS TO BE PROVIDED BY THE BAS SYSTEM CONTRACTOR.
3. HALL 101 NORMAL HOURS/AFTER HOURS MOTION SENSOR SCHEDULING TO BE VIA LMCP 'LCPA' TIMECLOCK.

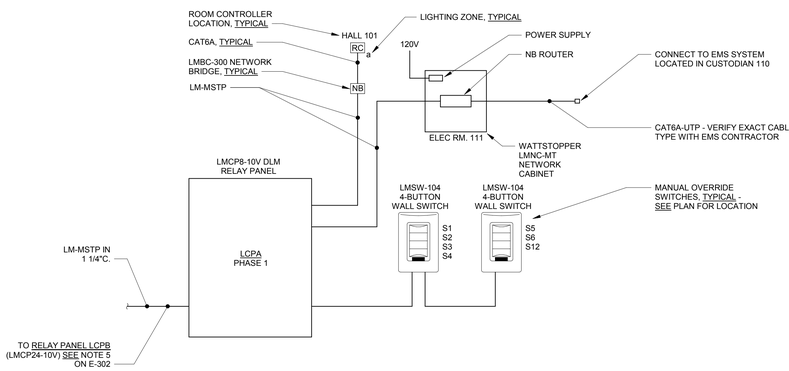

3A LLCWO08C - RELAY PANEL LCPA & ROOM CONTROLLER WIRING DIAGRAM
12" = 1'-0"

30 x 42"
10/17/2023 1:07:30 PM

AGENCY APPROVAL STAMP:

IDENTIFICATION STAMP
DIV. OF THE STATE ARCHITECT
APP: 01-120890 INC:
REVIEWED FOR
SS ☑ FLS ☑ ACS ☑
DATE: 10/25/2023

TLCDARCHITECTURE
520 Third St. #250
Santa Rosa, CA 95401
o: 707.525.5600
f: 707.525.5616
tlcd.com

CONSULTANT:

O'MAHONY & MYER
ELECTRICAL ENGINEERING & LIGHTING DESIGN
4340 REDWOOD HWY., SUITE 245
SAN RAFAEL, CALIFORNIA 94903
(415) 492-0420/FAX (415) 479-9662

STAMP:

REGISTERED PROFESSIONAL ENGINEER
PETER A. COLENBRANDER
No.E14738
Exp. 6/30
ELECTRICAL
STATE OF CALIFORNIA

REVISIONS:

Number	Date	Description

NAPA VALLEY COLLEGE WINE EDUCATION CENTER

2277 NAPA VALLEJO HWY
NAPA, CA 94558

NAPA VALLEY COLLEGE

DSA APPLICATION NUMBER:
01-120890

TLCD PROJECT NUMBER:
21062.00

DATE:
AUGUST 30, 2023

SINGLE LINE DIAGRAMS

E-505

© THESE DRAWINGS ARE INSTRUMENTS OF SERVICE AND ARE THE SOLE PROPERTY OF TLCD ARCHITECTURE. ANY USE WITHOUT WRITTEN CONSENT IS PROHIBITED.

NAPA VALLEY COLLEGE WINE EDUCATION CENTER - 222020 R23

LOAD CALCULATION: MSW

Volts: 120/208V 3PH, 4W **A.I.C. Rating:** 65kAIC
Phases: 3 **MCB Rating:** 1000 A
Wires: 4 **Enclosure Rating:** NEMA 1

Notes:
PROVIDE WITH GROUPED METERING PROVISIONS AS SHOWN ON DIAGRAM. PROVIDE CIRCUIT BREAKERS WITHIN FULLY BUSSED SECTIONS.

Circuit Description	Trip	Poles	Load	Remarks
LA	225	3	4.81	
LB	225	3	38.85	
LC	225	3	23.90	
LD	225	3	60.30	
BA	80	3	17.62	
RTU 1	90	3	25.65	
RTU 1 (PE)	15	3	3.28	
RTU 3	70	3	18.16	
RTU 3 (PE)	15	3	3.28	
RTU 2	70	3	18.16	
RTU 2 (PE)	15	3	3.28	
HP-1	45	3	11.17	
HE 1	20	3	5.40	
S P A C E	--	3	--	
SPARE	225	3	0.00	
SPARE	225	3	0.00	
SPARE	225	3	0.00	
SPARE	225	3	0.00	
S P A C E	--	1	--	
S P A C E	--	1	--	
S P A C E	--	1	--	
S P A C E	--	1	--	
S P A C E	--	1	--	
ENERGY STORAGE INTERCONNECTION	125	3	0.00	
			233.85	

Panel Totals	
TOTAL kVA:	233.85 kVA
MAX AMPS:	649.1 A

Notes:

LC

Location: ELEC 111 **Volts:** 120/208V 3PH, 4W **A.I.C. Rating:** 65kAIC
Supply From: MSW **Phases:** 3 **Mains Type:** MCB
Mounting: **Wires:** 4 **Mains Rating:** 225 A
Enclosure: **MCB Rating:** 225 A
Notes:
PROVIDE 84 POLE PANELBOARD IN SINGLE 20" WIDE SECTION.

CKT	Circuit Description	Type	Trip	Poles	A	B	C	A	B	C	Poles	Trip	Type	Circuit Description	CKT
1	REC - WINE LAB 104 S...	R	20 A	1	0.50			1.00			1	20 A	R	REC - WINE LAB 104 TABLES	2
3	REC - WINE LAB 104 S...	R	20 A	1		0.50			1.00		1	20 A	R	REC - WINE LAB 104 TABLES	4
5	REC - WINE LAB 104 S...	R	20 A	1			0.50			1.00	1	20 A	R	REC - WINE LAB 104 TABLES	6
7	REC - WINE LAB 104 S...	R	20 A	1	0.50			1.00			1	20 A	R	REC - WINE LAB 104 TABLES	8
9	REC - WINE LAB 104 S...	R	20 A	1		0.50			1.00		1	20 A	R	REC - WINE LAB 104 TABLES	10
11	REC - WINE LAB 104 E...	R	20 A	1			0.50			1.00	1	20 A	R	REC - WINE LAB 104 TABLES	12
13	REC - WINE LAB 104 E...	R	20 A	1	0.50			0.50			1	20 A	R	REC - WINE LAB 104 PODIUM	14
15	REC - WINE LAB 104 E...	R	20 A	1		0.50			0.50		1	20 A	M	REC - WINE LAB 104 PODIUM	16
17	REC - WINE LAB 104 E...	R	20 A	1			0.50			0.54	1	20 A	R	REC - WINE LAB 104	18
19	REC - WINE LAB 104 E...	R	20 A	1	0.50			0.50			1	20 A	M	WINE LAB 104 - SMART BOARD	20
21	REC - WINE LAB 104 E...	R	20 A	1		0.50			0.36		1	20 A	R	REC - WINE LAB 104 SB INPUTS	22
23	REC - WINE LAB 104 E...	R	20 A	1			0.50			0.50	1	20 A	M	FUME HOOD - LAB 105	24
25	REC - WINE LAB 104 E...	R	20 A	1	0.50			0.50			1	20 A	R	REC - LAB 105 E COUNTER	26
27	REC - WINE LAB 104 N...	R	20 A	1		0.50			0.50		1	20 A	R	REC - LAB 105 E COUNTER	28
29	REC - WINE LAB 104 N...	R	20 A	1			0.50			0.50	1	20 A	R	REC - LAB 105 E COUNTER	30
31	REC - WINE LAB 104 N...	R	20 A	1	0.50			0.50			1	20 A	R	REC - LAB 105 E COUNTER	32
33	REC - WINE LAB 104 N...	R	20 A	1		0.50			0.50		1	20 A	R	REC - LAB 105 N COUNTER	34
35	REC - WINE LAB 104 N...	R	20 A	1			0.50			0.50	1	20 A	R	REC - LAB 105 N COUNTER	36
37	REC - WINE LAB 104 N...	R	20 A	1	0.50			0.50			1	20 A	R	REC - LAB 105 N COUNTER	38
39	REC - WINE LAB 104 N...	R	20 A	1		0.50			0.50		1	20 A	R	REC - LAB 105 W COUNTER	40
41	REC - LAB 105 N COUNTER	R	20 A	1			0.50			0.50	1	20 A	R	REC - LAB 105 N COUNTER	42
43	SPARE	--	20 A	1	0.00			0.00			1	20 A	--	SPARE	44
45	SPARE	--	20 A	1		0.00			0.00		1	20 A	--	SPARE	46
47	SPARE	--	20 A	1			0.00			0.00	1	20 A	--	SPARE	48
49	SPARE	--	20 A	1	0.00			0.00			1	20 A	--	SPARE	50
51	SPARE	--	20 A	1		0.00			0.00		1	20 A	--	SPARE	52
53	SPARE	--	20 A	1			0.00			0.00	1	20 A	--	SPARE	54
55	SPARE	--	20 A	1	0.00			0.00			1	20 A	--	SPARE	56
57	SPARE	--	20 A	1		0.00			0.00		1	20 A	--	SPARE	58
59	SPARE	--	20 A	1			0.00			0.00	1	20 A	--	SPARE	60
61	SPARE	--	20 A	1	0.00			0.00			1	20 A	--	SPARE	62
63	SPARE	--	20 A	1		0.00			0.00		1	20 A	--	SPARE	64
65	SPARE	--	20 A	1			0.00			0.00	1	20 A	--	SPARE	66
67	SPARE	--	20 A	1	0.00			0.00			1	20 A	--	SPARE	68
69	SPARE	--	20 A	1		0.00			0.00		1	20 A	--	SPARE	70
71	SPARE	--	20 A	1			0.00			0.00	1	20 A	--	SPARE	72
73	SPARE	--	20 A	1	0.00			0.00			1	20 A	--	SPARE	74
75	SPARE	--	20 A	1		0.00			0.00		1	20 A	--	SPARE	76
77	SPARE	--	20 A	1			0.00			0.00	1	20 A	--	SPARE	78
79	SPARE	--	20 A	1	0.00			0.00			1	20 A	--	SPARE	80
81	SPARE	--	20 A	1		0.00			0.00		1	20 A	--	SPARE	82
83	SPARE	--	20 A	1			0.00			0.00	1	20 A	--	SPARE	84

DEMAND LOAD SUMMARY	CONNECTED...	DEMAND FACTOR	DEMAND KVA
TYPE "M": NON-CONTINUOUS / MIS...	1.50	100.00%	1.50
TYPE "L": LIGHTING / CONTINUOUS...			
TYPE "R": RECEPTACLES	22.40	72.32%	16.20
TYPE "H" HVAC / MECHANICAL...			
TOTALS:	23.90		17.70

PANEL TOTALS	kVA	AMPS	AMPS AT 125%
PHASE A:	8.00	66.846 A	83.558 A
PHASE B:	7.86	65.5 A	81.875 A
PHASE C:	8.04	67.179 A	83.974 A

LA

Location: ELEC 111 **Volts:** 120/208V 3PH, 4W **A.I.C. Rating:** 65kAIC
Supply From: MSW **Phases:** 3 **Mains Type:** MCB
Mounting: **Wires:** 4 **Mains Rating:** 225 A
Enclosure: **MCB Rating:** 225 A
Notes:

CKT	Circuit Description	Type	Trip	Poles	A	B	C	A	B	C	Poles	Trip	Type	Circuit Description	CKT
1	RESERVED LIGHTING CIRCUITS	--	20 A	1	0.00			0.91			1	20 A	L	L OFFICE 102	2
3	L LAB PREP 105	L	20 A	1		1.04			0.00		1	20 A	--	RESERVED LIGHTING CIRCUITS	4
5	L SENSORY CLASSROOM 113	L	20 A	1			0.95			0.00	1	20 A	--	RESERVED LIGHTING CIRCUITS	6
7	L SENSORY CLASSROOM 115	L	20 A	1	0.95			0.00			1	20 A	--	RESERVED LIGHTING CIRCUITS	8
9	L PH1 EXT	L	20 A	1		0.95			0.00		1	20 A	--	RESERVED LIGHTING CIRCUITS	10
11	RESERVED LIGHTING CIRCUITS	--	20 A	1			0.00			0.00	1	20 A	--	RESERVED LIGHTING CIRCUITS	12
13	SPARE	--	20 A	1	0.00			0.00			1	20 A	--	SPARE	14
15	SPARE	--	20 A	1		0.00			0.00		1	20 A	--	SPARE	16
17	SPARE	--	20 A	1			0.00			0.00	1	20 A	--	SPARE	18
19	SPARE	--	20 A	1	0.00			0.00			1	20 A	--	SPARE	20
21	SPARE	--	20 A	1		0.00			0.00		1	20 A	--	SPARE	22
23	SPARE	--	20 A	1			0.00			0.00	1	20 A	--	SPARE	24
25	S P A C E	--	--	1	--			--			1	--	--	S P A C E	26
27	S P A C E	--	--	1		--			--		1	--	--	S P A C E	28
29	S P A C E	--	--	1			--			--	1	--	--	S P A C E	30
31	S P A C E	--	--	1	--			--			1	--	--	S P A C E	32
33	S P A C E	--	--	1		--			--		1	--	--	S P A C E	34
35	S P A C E	--	--	1			--			--	1	--	--	S P A C E	36
37	S P A C E	--	--	1	--			--			1	--	--	S P A C E	38
39	S P A C E	--	--	1		--			--		1	--	--	S P A C E	40
41	S P A C E	--	--	1			--			--	1	--	--	S P A C E	42

DEMAND LOAD SUMMARY	CONNECTED...	DEMAND FACTOR	DEMAND KVA
TYPE "M": NON-CONTINUOUS / MIS...			
TYPE "L": LIGHTING / CONTINUOUS...	4.81	125.00%	6.02
TYPE "R": RECEPTACLES			
TYPE "H" HVAC / MECHANICAL...			
TOTALS:	4.81		6.02

PANEL TOTALS	kVA	AMPS	AMPS AT 125%
PHASE A:	1.87	16.716 A	20.896 A
PHASE B:	1.99	17.787 A	22.234 A
PHASE C:	0.95	7.945 A	9.931 A

LB

Location: ELEC 111 **Volts:** 120/208V 3PH, 4W **A.I.C. Rating:** 65kAIC
Supply From: MSW **Phases:** 3 **Mains Type:** MCB
Mounting: **Wires:** 4 **Mains Rating:** 225 A
Enclosure: **MCB Rating:** 225 A
Notes:
PROVIDE 84 POLE PANELBOARD IN SINGLE 20" WIDE SECTION.

CKT	Circuit Description	Type	Trip	Poles	A	B	C	A	B	C	Poles	Trip	Type	Circuit Description	CKT
1	REC - RM 113	R	20 A	1	0.54			0.36			1	20 A	R	REC- OFFICE 103	2
3	REC - RM 113 COUNTER	R	20 A	1		0.36			0.54		1	20 A	R	REC - OFFICE 102	4
5	RM 113 - SMART BOARD	M	20 A	1			0.50			0.72	1	20 A	R	REC - HALL 101	6
7	RM 113 - SMART BOARD INPUTS	R	20 A	1	0.72			1.08			1	20 A	R	REC - HALL 101	8
9	RM 113 - SMART BOARD	M	20 A	1		0.50			0.36		1	20 A	R	REC - CUST 110	10
11	SPARE	--	20 A	1			0.00			0.18	1	20 A	R	REC - CUST 110	12
13	REC - RM 115	R	20 A	1	0.54			0.72			1	20 A	R	REC - RESTROOMS & MECH	14
15	REC - RM 115 COUNTER	R	20 A	1		0.36			0.00		1	20 A	--	SPARE	16
17	RM 115 - SMART BOARD INPUTS	R	20 A	1			0.36			0.00	1	20 A	--	SPARE	18
19	RM 115 - SMART BOARD	M	20 A	1	0.50			0.00			1	20 A	--	SPARE	20
21	RM 115 - SMART BOARD	M	20 A	1		0.50			0.00		1	20 A	--	SPARE	22
23	SPARE	--	20 A	1			0.00			0.25	2	20 A	M	MOTORIZED PARTITION	24
25	SPARE	--	20 A	1	0.00			0.25							26
27	SPARE	--	20 A	1		0.00			0.50		1	20 A	R	PREP 114 - COUNTER	28
29	RM 113 - L6-30R	R	30 A	2			2.25			0.50	1	20 A	R	PREP 114 - COUNTER	30
31					2.25			0.54			1	20 A	R	REC - SENSORY PREP 114	32
33	RM 115 - L6-30R	R	30 A	2		2.25			0.00		1	20 A	--	SPARE	34
35							2.25			0.80	1	20 A	M	PREP 114 DISHWASHER	36
37	REC - ROOF MECH UNITS	R	20 A	1	0.54			0.50			1	20 A	M	PREP 114 DISHWASHER	38
39	REC - ROOF MECH UNITS	R	20 A	1		0.54			0.50		1	20 A	R	PREP 114 - COUNTER	40
41	REC - ROOF PARAPET	R	20 A	1			0.36			0.18	1	20 A	R	DRINKING FOUNTAIN	42
43	REC - BDF ROOM	R	20 A	1	0.36			0.36			1	20 A	R	REC - BDF ROOM	44
45	REC - BDF ROOM	R	20 A	1		0.36			0.36		1	20 A	R	REC - BDF ROOM	46
47	REC - BDF ROOM	R	20 A	1			0.36			0.36	1	20 A	R	REC - BDF ROOM	48
49	CT PROVISIONS	--	--	3	--			--			3	--	--	CT PROVISIONS	50
51						--			--						52
53							--			--					54
55	SPARE	--	20 A	1	0.00			0.10			2	20 A	H	BRANCH SELECTOR BC 1	56
57	EFs 1, 2	H	20 A	1		1.39			0.10						58
59	EFs 3, 4	H	20 A	1			1.39			0.22	2	15 A	H	FC 1	60
61	CTRL PANEL CN-1	H	20 A	2	0.21			0.22							62
63						0.21			0.30		2	15 A	H	FC 2	64
65	SPARE	--	20 A	1			0.00			0.30					66
67	CIRC PUMP P1	H	15 A	1	0.60			0.10			2	15 A	H	FC 3	68
69	LAB PREP 105 - SINK	H	15 A	1		0.94			0.10						70
71	WINE LAB 104 - SINK	H	15 A	1			0.94			0.10	2	15 A	H	FC 4	72
73	LAB PREP 105 TRAP PRIMER	H	20 A	1	0.60			0.10							74
75	FLUSH VALVES	M	15 A	1		0.24			0.35		2	15 A	H	FC 5	76
77	RM 104 - SHADE POWER	M	20 A	1			1.20			0.35					78
79	RM 113 - SHADE POWER	M	20 A	1	1.20			0.00			1	20 A	--	SPARE	80
81	RM 115 - SHADE POWER	M	20 A	1		1.20			0.06		1	20 A	H	SUPPLY FAN - WINE LAB	82
83	SPARE	--	20 A	1			0.00			0.84	1	20 A	H	WATER HEATER WH 1	84

DEMAND LOAD SUMMARY	CONNECTED...	DEMAND FACTOR	DEMAND KVA
TYPE "M": NON-CONTINUOUS / MIS...	7.64	100.00%	7.64
TYPE "L": LIGHTING / CONTINUOUS...			
TYPE "R": RECEPTACLES	21.66	73.08%	15.83
TYPE "H" HVAC / MECHANICAL...	9.55	100.00%	9.55
TOTALS:	38.85		33.02

PANEL TOTALS	kVA	AMPS	AMPS AT 125%
PHASE A:	12.40	103.826 A	129.783 A
PHASE B:	12.03	100.226 A	125.283 A
PHASE C:	14.42	120.619 A	150.773 A

LD

Location: TASTING PREP 117 **Volts:** 120/208V 3PH, 4W **A.I.C. Rating:** 65kAIC
Supply From: MSW **Phases:** 3 **Mains Type:** MCB
Mounting: FLUSH **Wires:** 4 **Mains Rating:** 225 A
Enclosure: **MCB Rating:** 225 A
Notes:
PROVIDE QUANTITY OF POLES AND CT SPACES IN A SINGLE 20" WIDE SECTION. SIEMENS P2 SERIES PANELBOARD OR EQUAL.

<-------- UNSHADED AREAS INDICATE PANELBOARD SEPARATIONS, FOR TITLE 24 FUTURE METERING SPACE PROVISIONS -------->

CKT	Circuit Description	Type	Trip	Poles	A	B	C	A	B	C	Poles	Trip	Type	Circuit Description	CKT
1	L TASTING 116	L	20 A	1	0.93			0.00			1	20 A	--	SPARE	2
3	L PATIO EXT 2	L	20 A	1		0.57			0.00		1	20 A	--	SPARE	4
5	SPARE	--	20 A	1			0.00			0.00	1	20 A	--	SPARE	6
7	SPARE	--	20 A	1	0.00			0.00			1	20 A	--	SPARE	8
9	SPARE	--	20 A	1		0.00			0.00		1	20 A	--	SPARE	10
11	SPARE	--	20 A	1			0.00			0.00	1	20 A	--	SPARE	12
13	SPARE	--	20 A	1	0.00			0.00			1	20 A	--	SPARE	14
15	SPARE	--	20 A	1		0.00			0.00		1	20 A	--	SPARE	16
17	SPARE	--	20 A	1			0.00			0.00	1	20 A	--	SPARE	18
19	SPARE	--	20 A	1	0.00			4.00			3	45 A	H	RTU 4 12KW STRIP HEATER	20
21	SPARE	--	20 A	1		0.00			4.00						22
23	SPARE	--	20 A	1			0.00			4.00					24
25	CT PROVISIONS	--	--	3	--			--			3	--	--	CT PROVISIONS	26
27						--			--						28
29							--			--					30
31	HVAC - RTU-4	H	70 A	3	6.05			1.09			3	20 A	H	HVAC - POWER EXHAUST RTU-4	32
33						6.05			1.09						34
35							6.05			1.09					36
37	SPARE	--	20 A	1	0.00			0.00			1	20 A	--	SPARE	38
39	HVAC - EF-5 (ROOF)	H	20 A	1		0.24			0.60		1	15 A	H	CIRC PUMP P2	40
41	HEAT TRACE CONTROL PANEL	M	20 A	1			2.64			0.75	1	20 A	M	UC FRIDGE - TASTING RM	42
43	WATER HEATER (ABOVE CLG)	H	40 A	3	3.36			0.00			1	20 A	--	SPARE	44
45						3.36			0.00		1	20 A	--	SPARE	46
47							3.36			0.75	1	20 A	M	UC FRIDGE - TASTING RM	48
49	CT PROVISIONS	--	--	3	--			--			3	--	--	CT PROVISIONS	50
51						--			--						52
53							--			--					54
55	REC - TASTING RM	R	20 A	1	0.72			0.00			1	20 A	--	SPARE	56
57	R TASTING 116	R	20 A	1		0.72			0.60		1	20 A	R	REC - TASTING RM P.O.S	58
59	AV INPUTS - TASTING RM	R	20 A	1			0.36			1.00	1	20 A	R	REC - TASTING RM COUNTER	60
61	AV BOX - TASTING RM TV	M	20 A	1	0.50			1.00			1	20 A	R	REC - TASTING RM COUNTER	62
63	SPARE	--	20 A	1		0.00			0.50		1	20 A	R	REC - TASTING RM COUNTER	64
65	SPARE	--	20 A	1			0.00			0.00	1	20 A	--	SPARE	66
67	REC - PREP	R	20 A	1	0.54			0.36			1	20 A	R	REC - PREP COUNTERS	68
69	SPARE	--	20 A	1		0.00			1.00		1	20 A	R	REC - PREP COUNTERS	70
71	SPARE	--	20 A	1			0.00			0.50	1	20 A	R	REC - PREP COUNTERS	72
73	FRIDGE - TASTING PREP 117	M	20 A	1	0.50			0.50			1	20 A	R	REC - PREP COUNTERS	74
75	FRIDGE - TASTING PREP 117	M	20 A	1		0.50			0.50		1	20 A	R	REC - PREP COUNTERS	76
77	REC - ROOF CONVENIENCE	R	20 A	1			0.00			0.50	1	20 A	M	DISHWASHER - PREP RM	78

DEMAND LOAD SUMMARY	CONNECTED KVA	DEMAND FACTOR	DEMAND KVA
TYPE "M": NON-CONTINUOUS / MISC....	6.14	100.00%	6.14
TYPE "L": LIGHTING / CONTINUOUS LOADS	1.50	125.00%	1.87
TYPE "R": RECEPTACLES	8.30	100.00%	8.30
TYPE "H" HVAC / MECHANICAL LOADS	44.36	100.00%	44.36
TOTALS:	60.30		60.67

PANEL TOTALS	kVA	AMPS	AMPS AT 125%
PHASE A:	19.56	162.984 A	203.729 A
PHASE B:	19.73	164.657 A	205.822 A
PHASE C:	21.01	175.296 A	219.12 A

BA

Location: ELEC 111 **Volts:** 120/208V 3PH, 4W **A.I.C. Rating:** 65kAIC
Supply From: MSW **Phases:** 3 **Mains Type:** MCB
Mounting: SURFACE **Wires:** 4 **Mains Rating:** 100 A
Enclosure: (NEMA 1) **MCB Rating:** 80 A
Notes:

INTENDED AS CRITICAL LOAD PANEL, BY MANUAL LOAD SHED DURING UTILITY DOWNTIME. PANEL NOT INTENDED FOR EMERGENCY USE.

CKT	Circuit Description	Type	Trip	Poles	A	B	C	A	B	C	Poles	Trip	Type	Circuit Description	CKT
1	REC - SENSORY RM 113	R	20 A	1	0.18			0.18			1	20 A	R	REC - SENSORY RM 115	2
3	REC - WINE LAB 104 PODIUM	R	20 A	1		0.36			1.10		1	20 A	M	BDF RACK	4
5	REC - WINE LAB 104...	R	20 A	1			0.50			1.10	1	20 A	M	BDF RACK	6
7	REC - WINE LAB 104...	R	20 A	1	0.50			0.72			1	20 A	R	REC - OFFICE 102	8
9	UC FRIDGE - LAB PREP 105	M	20 A	1		0.50			1.22		1	20 A	R; M	REC - RM 115 PODIUM /...	10
11	UC FRIDGE - SENSORY PREP...	M	20 A	1			0.50			1.22	1	20 A	R; M	REC - SENSORY RM 113...	12
13	SENSORY PREP - UC FRIDGE	M	20 A	1	0.50			0.72			1	20 A	R	REC - OFFICE 103	14
15	SPARE	--	20 A	1		0.00			0.00		1	20 A	--	SPARE	16
17	OU 1 (ROOF)	H	30 A	2			1.98			0.00	1	20 A	--	SPARE	18
19					1.98			0.00			1	20 A	--	SPARE	20
21	IU 1 (ELEC RM)	H	15 A	2		0.10			0.10		2	20 A	H	IU 2 (BDF ROOM)	22
23							0.10			0.10					24
25	OU 2 (ROOF)	H	30 A	2	1.98			0.00			1	20 A	--	SPARE	26
27						1.98			0.00		1	20 A	--	SPARE	28
29	SPARE	--	20 A	1			0.00			0.00	1	20 A	--	SPARE	30
31	S P A C E	--	--	1	--			--			1	--	--	S P A C E	32
33	S P A C E	--	--	1		--			--		1	--	--	S P A C E	34
35	S P A C E	--	--	1			--			--	1	--	--	S P A C E	36
37	S P A C E	--	--	1	--			--			1	--	--	S P A C E	38
39	S P A C E	--	--	1		--			--		1	--	--	S P A C E	40
41	S P A C E	--	--	1			--			--	1	--	--	S P A C E	42

DEMAND LOAD SUMMARY	CONNECTED...	DEMAND FACTOR	DEMAND KVA
TYPE "M": NON-CONTINUOUS / MIS...	4.70	100.00%	4.70
TYPE "L": LIGHTING / CONTINUOUS...			
TYPE "R": RECEPTACLES	4.60	100.00%	4.60
TYPE "H" HVAC / MECHANICAL...	8.32	100.00%	8.32
TOTALS:	17.62		17.62

PANEL TOTALS	kVA	AMPS	AMPS AT 125%
PHASE A:	6.75	56.446 A	70.558 A
PHASE B:	5.36	44.7 A	55.875 A
PHASE C:	5.50	46.046 A	57.558 A

Napa Valley College WEC Electrical Equipment Chart

Equipment	Manufacturer/Model	Weight	Size (INCHES)	OMM detail number	HCAI OSP
Transformer T-LRC Oil Filled 12.4 kv Pad Mount Transformer	Eaton Transformer Mid-Range Voltage 300KVA, 3PH 4W	3800#	81w x53d x 57h	1/E501, 5 & 6/E704	
Switchgear Main Switch Board MSB	Eaton Pow-R-Line - 1000A, 120/208V 3PH	1500# (2 Sections max total)	60w x 18d x 91.5h	2/E301 & 10/E701	
Transformer (Battery System Output)	Eaton DT3 30 30kVA 480V 3PH	565#	28.3w x 22d x 36h	2/E301 & 14/E701	OSP 008
Transformer Breaker	Sq D CP Wall mount	15#	9"w x 4"d x 12"h	2/E301 & 9/E701	
Wall mounted panel Board Single section	Sq D CP Wall Mount 1 section	275# max	20w x 6d x 54h	2/E301 & 8/E701	OSP 016
Wall mounted panel Board 2 Section	Sq D CP Wall Mount 2 section	480# max	40w x 6d x74h	2/E301 & 8/E701	OSP 016
Lighting Inverter INVA	Myers Illuminator 1100VA	246#	26w x 10.125d x 25.3h	1/E201 & 9/E701	
Lighting Fixture Supports & Bracing	See Luminaire Schedules on E02., E0.3, E0.4	Weights noted on Schedules	Sizes noted on Schedules	SEE DETAILS Sheet E703 & E704	
Lighting Control Panel	LeGrand Watt Stopper	275# Max	24w x 6d x 48h max	1/E201 & 9/E701	
Fire Alarm Panel	Notifier NFS2	60# Max	20w x 4d x 30h	2/E301 & 8/E701	
Energy Storage System Battery	Energport C&I Energy Storage system	1945#	40w x 24d x80h	2/E301 & 7/E701	
Lighting Inverter INVA	Myers Illuminator 550VA	130#	19w x 9.25d x 22h	1/E202 & 9/E701	
Telecom rack	CPI universal to post rack 46353	1500# max	20.25w x 24d x 84h	1/E301, 8 & 9/E702	

AGENCY APPROVAL STAMP:

IDENTIFICATION STAMP
DIV. OF THE STATE ARCHITECT
APP: 01-120890 INC:
REVIEWED FOR
SS ☑ FLS ☑ ACS ☑
DATE: 10/25/2023

TLCDARCHITECTURE
520 Third St. #250
Santa Rosa, CA 95401
o: 707.525.5600
f: 707.525.5616
tlcd.com

CONSULTANT:

O'MAHONY & MYER
ELECTRICAL ENGINEERING & LIGHTING DESIGN
4340 REDWOOD HWY., SUITE 245
SAN RAFAEL, CALIFORNIA 94903
(415) 492-0420/FAX (415) 479-9662

STAMP:

REGISTERED PROFESSIONAL ENGINEER
PIETER J. COLENBRANDER
No.E14738
Exp. 6/25
ELECTRICAL
STATE OF CALIFORNIA

REVISIONS:

Number	Date	Description

NAPA VALLEY COLLEGE WINE EDUCATION CENTER

2277 NAPA VALLEJO HWY
NAPA, CA 94558

NAPA VALLEY COLLEGE

DSA APPLICATION NUMBER:
01-120890

TLCD PROJECT NUMBER:
21062.00

DATE:
AUGUST 30, 2023

© THESE DRAWINGS ARE INSTRUMENTS OF SERVICE AND ARE THE SOLE PROPERTY OF TLCD ARCHITECTURE. ANY USE WITHOUT WRITTEN CONSENT IS PROHIBITED.

SCHEDULES

E-601

30 x 42"
10/17/2023 1:07:33 PM

NAPA VALLEY COLLEGE WINE EDUCATION CENTER - 222020 R23

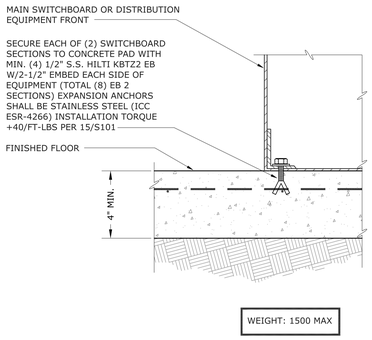

10 SWITCHBOARD AND FLOOR/SLAB MOUNTED DISTRIBUTION PANEL MOUNTING
NO SCALE

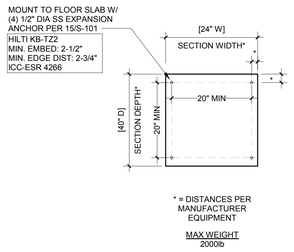

7 'BESS' EQUIPMENT ANCHORAGE
NTS

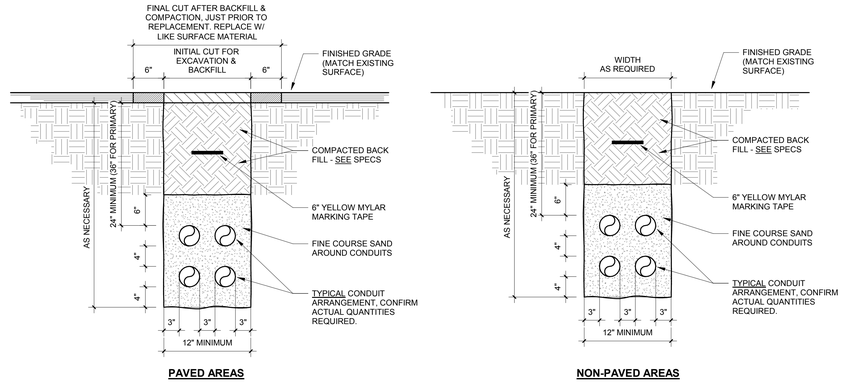

1 TYPICAL TRENCH SECTIONS
1" = 1'-0"

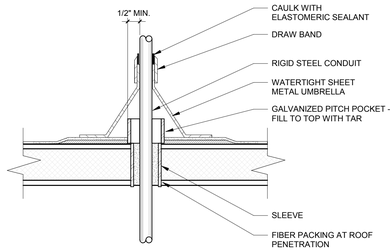

11 ROOF PENETRATION DETAIL
12" = 1'-0"

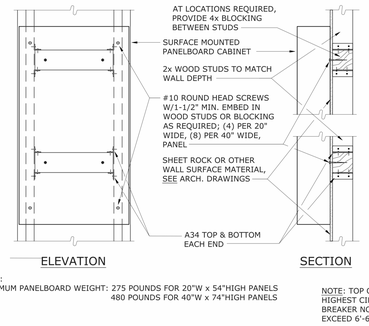

8 SURFACE PANELBOARD MOUNTING
NO SCALE

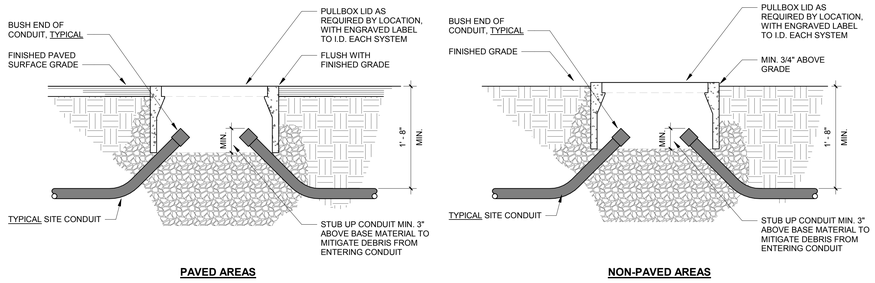

2 TYPICAL PULLBOX SECTION
1" = 1'-0"

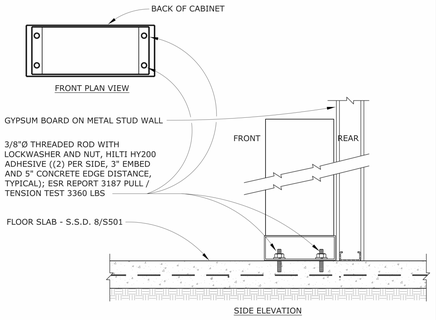

12 INVERTER MOUNTING ON SLAB
NOT TO SCALE

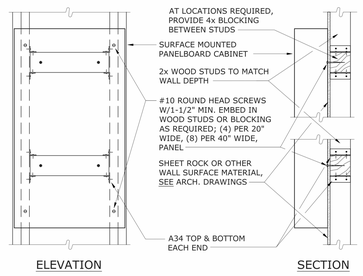

9 MISCELLANEOUS SURFACE MOUNTED EQUIPMENT
NO SCALE

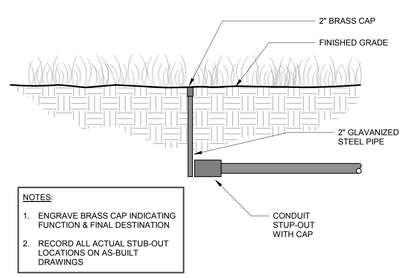

5 CONDUIT STUB-OUT
1" = 1'-0"

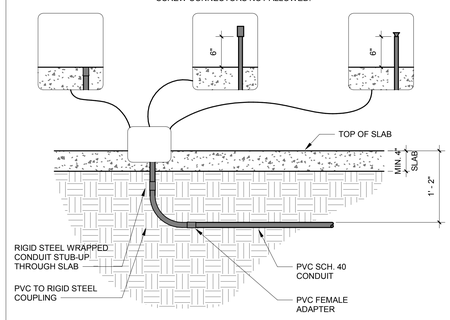

3 CONDUIT STUB-UP
1" = 1'-0"

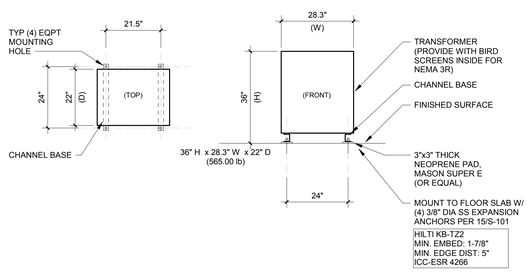

14 TRANSFORMER MOUNTING - FLOOR
1/2" = 1'-0"

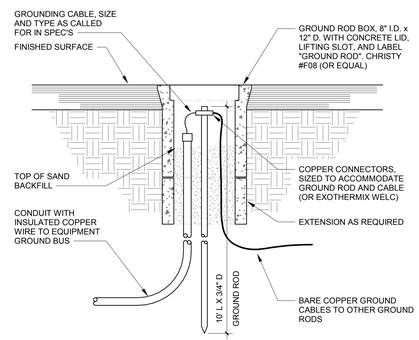

6 GROUND ROD - FINISHED SURFACE
1 1/2" = 1'-0"

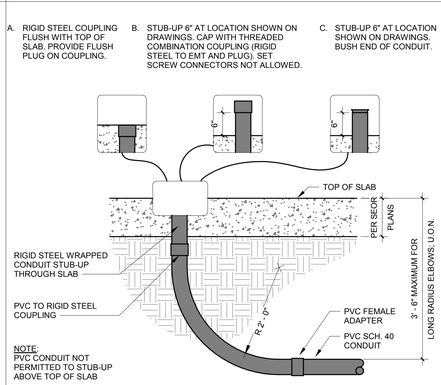

4 CONDUIT STUB-UP - FEEDERS - LONG RADIUS BENDS
3/4" = 1'-0"

30 x 42"
10/17/2023 1:07:37 PM

AGENCY APPROVAL STAMP:

IDENTIFICATION STAMP
DIV. OF THE STATE ARCHITECT
APP: 01-120890 INC:
REVIEWED FOR
SS ☑ FLS ☑ ACS ☑
DATE: 10/25/2023

TLCDARCHITECTURE
520 Third St. #250
Santa Rosa, CA 95401
o: 707.525.5600
f: 707.525.5616
tlcd.com

CONSULTANT:

O'MAHONY & MYER
ELECTRICAL ENGINEERING & LIGHTING DESIGN
4340 REDWOOD HWY., SUITE 245
SAN RAFAEL, CALIFORNIA 94903
(415) 492-0420/FAX (415) 479-9662

STAMP:

REGISTERED PROFESSIONAL ENGINEER
PETER A. COLENBRANDER
No.E14738
Exp. 6/25
ELECTRICAL
STATE OF CALIFORNIA

REVISIONS:

Number	Date	Description

NAPA VALLEY COLLEGE WINE EDUCATION CENTER

2277 NAPA VALLEJO HWY
NAPA, CA 94558

NAPA VALLEY COLLEGE

DSA APPLICATION NUMBER:
01-120890

TLCD PROJECT NUMBER:
21062.00

DATE:
AUGUST 30, 2023

DETAILS

E-701

© THESE DRAWINGS ARE INSTRUMENTS OF SERVICE AND ARE THE SOLE PROPERTY OF TLCD ARCHITECTURE. ANY USE WITHOUT WRITTEN CONSENT IS PROHIBITED.

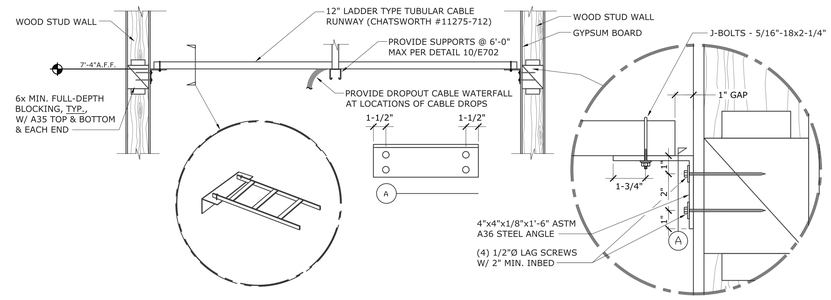

LADDER TYPE CABLE RUNWAY - WOOD STUD WALL (MAX. CABLE WEIGHT 20 PLF)

7 E-702

SCALE: NONE
FILE: L:\DETAILS\POWER\CABLETRAY\PCABL007A

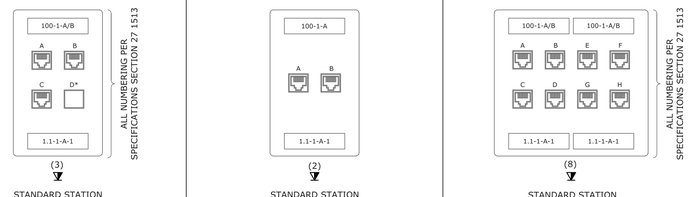

* PROVIDE COVERPLATE @ BLANK POSITIONS

SEE SPECIFICATION SECTION 27 1523 FOR JACK COLOR REQUIREMENTS

TELECOM OUTLET TYPE '▽'

3 E-702

SCALE: NONE

TELECOM OUTLET TYPE '▽'

2 E-702

SCALE: NONE

TELECOM OUTLET TYPE '▽'

1 E-702

SCALE: NONE

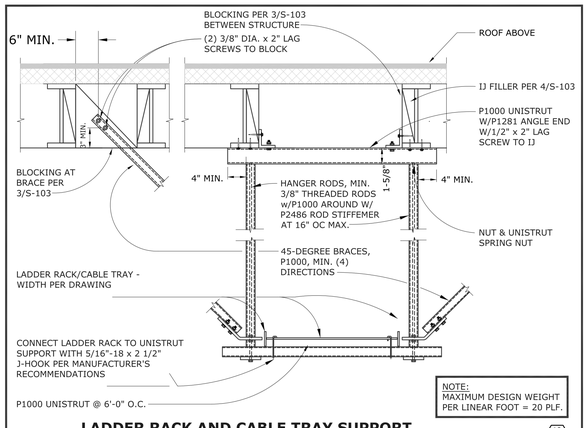

NOTE:
MAXIMUM DESIGN WEIGHT PER LINEAR FOOT = 20 PLF.

LADDER RACK AND CABLE TRAY SUPPORT

10 E-702

SCALE: NOT TO SCALE
FILE: L:\DETAILS\POWER\CABLETRAY\PCABL021

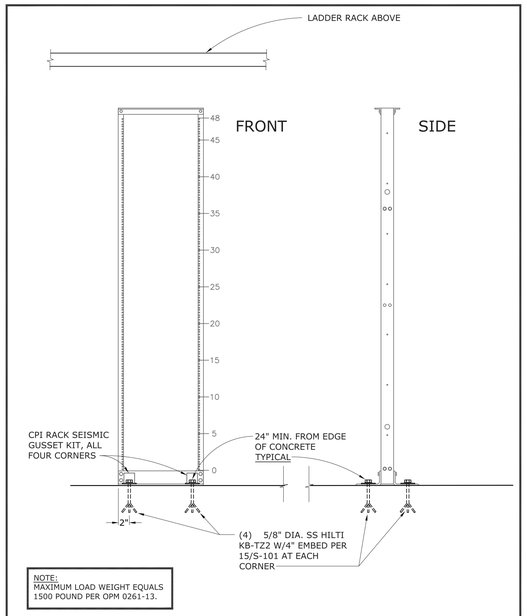

NOTE:
MAXIMUM LOAD WEIGHT EQUALS 1500 POUND PER OPM 0261-13.

CPI UNIVERSAL TWO POST #46353 - 84"x19" RACK

8 E-702

SCALE: NONE
FILE: L:\DETAILS\POWER\RACKS\PRACK007

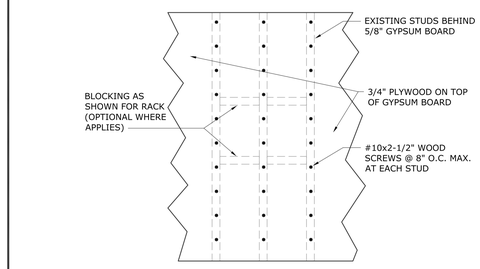

BACKBOARD PLYWOOD MOUNTING ON WOOD STUDS

4 E-702

SCALE: NONE
FILE: L:\DETAILS\POWER\COMMUNICATION\PCOMM001

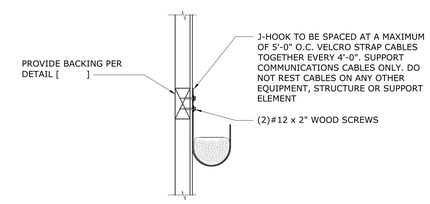

PROVIDE QUANTITY OF J-HOOKS AS NECESSARY TO PREVENT EXCEEDING 40% FILL OF J-HOOK CROSS SECTION

NOTE: COORDINATE LOCATIONS WITH OTHER SERVICES IN CEILING.

J-HOOK WALL MOUNTING DETAIL

11 E-702

SCALE: NONE
FILE: L:\DETAILS\POWER\DATA\PDATA018

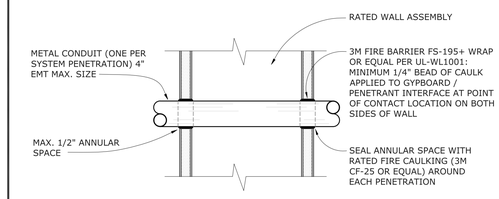

NOTES:

F RATING: 1, 2, 3 AND 4 HOUR.

T RATING: 1, 2, 3 AND 4 HOUR.

TELEPHONE CABLING IN CONDUIT PENETRATION IN RATED WALL - UL WL1001

5 E-702

SCALE: NONE
FILE: L:\DETAILS\POWER\CONDUIT\PCOND006A

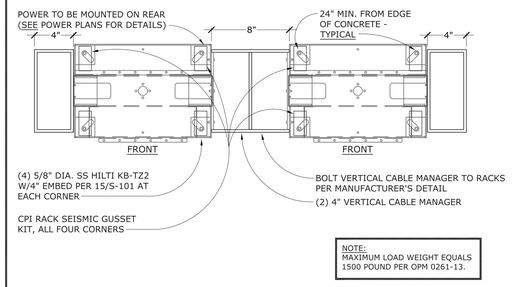

NOTE:
MAXIMUM LOAD WEIGHT EQUALS 1500 POUND PER OPM 0261-13.

TELECOM RACK-PLAN - IDF (TELE DATA) ROOMS

9 E-702

SCALE: NONE
FILE: L:\DETAILS\POWER\RACKS\PRACK004

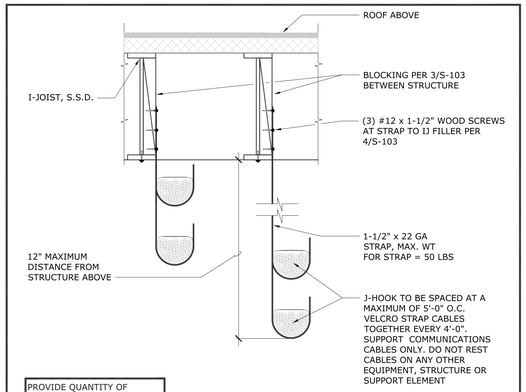

PROVIDE QUANTITY OF J-HOOKS AS NECESSARY TO PREVENT EXCEEDING 40% FILL OF J-HOOK CROSS SECTION

NOTE: COORDINATE LOCATIONS WITH OTHER SERVICES IN CEILING.

HANGING J-HOOK MOUNTING DETAIL

12 E-702

SCALE: NONE
FILE: L:\DETAILS\POWER\DATA\PDATA021

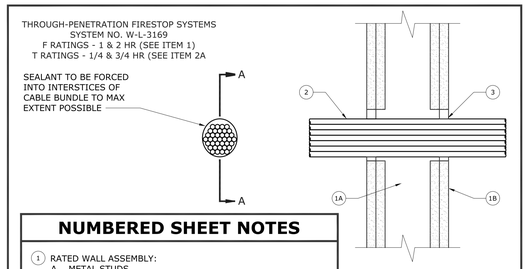

NUMBERED SHEET NOTES

1. RATED WALL ASSEMBLY:
   A. METAL STUDS
   B. 1 OR 2 LAYERS OF GYPSUM BOARD
2. CABLES MAX 4-1/2"Ø TIGHT BUNDLE OF CABLES
3. FILL, VOID OR CAVITY MATERIAL: STI SPECS SEAL LCI SEALANT, MINIMUM 5/8" THICKNESS OF FILL MATERIAL APPLIED AT CABLE BUNDLE/GYPSUM BOARD INTERFACE.

TELECOM CABLING PENETRATING RATED WALL W/O CONDUIT W-L-3169

6 E-702

SCALE: NONE
FILE: L:\DETAILS\POWER\CONDUIT\PCOND058

AGENCY APPROVAL STAMP:

IDENTIFICATION STAMP
DIV. OF THE STATE ARCHITECT
APP: 01-120890 INC:
REVIEWED FOR
SS ☑ FLS ☑ ACS ☑
DATE: 10/25/2023

TLCDARCHITECTURE
520 Third St. #250
Santa Rosa, CA 95401
o: 707.525.5600
f: 707.525.5616
tlcd.com

CONSULTANT:

O'MAHONY & MYER
ELECTRICAL ENGINEERING & LIGHTING DESIGN
4340 REDWOOD HWY., SUITE 245
SAN RAFAEL, CALIFORNIA 94903
(415) 492-0420/FAX (415) 479-9662

STAMP:

REGISTERED PROFESSIONAL ENGINEER
PETER A. COLEMAN JR.
No.E14738
Exp. 6/25
ELECTRICAL
STATE OF CALIFORNIA

REVISIONS:

Number	Date	Description

NAPA VALLEY COLLEGE WINE EDUCATION CENTER

2277 NAPA VALLEJO HWY
NAPA, CA 94558

NAPA VALLEY COLLEGE

DSA APPLICATION NUMBER:
01-120890

TLCD PROJECT NUMBER:
21062.00

DATE:
AUGUST 30, 2023

DETAILS

E-702

© THESE DRAWINGS ARE INSTRUMENTS OF SERVICE AND ARE THE SOLE PROPERTY OF TLCD ARCHITECTURE. ANY USE WITHOUT WRITTEN CONSENT IS PROHIBITED.

30 x 42"
10/17/2023 1:07:48 PM

NAPA VALLEY COLLEGE WINE EDUCATION CENTER - 222020 R23

NOTES: 1. LUMINAIRE SHALL BE FREE TO SWING 45° FROM THE VERTICAL IN ALL DIRECTIONS WITHOUT HITTING ANY OBSTRUCTIONS.
2. FOR CONNECTION OF COMPRESSION ROD AND GUY WIRES TO STRUCTURE - SEE DETAIL 2/E-704 AND 3/E-7-4.

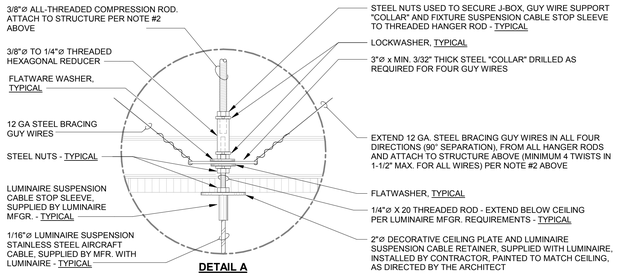

DETAIL A

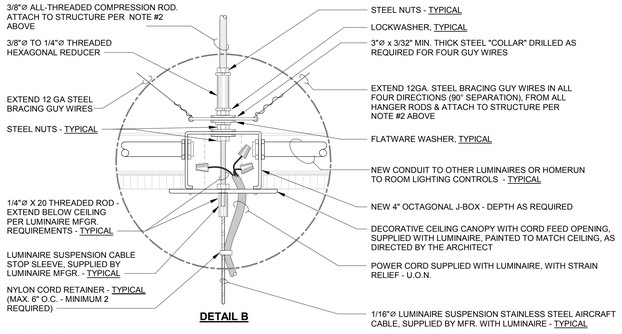

DETAIL B

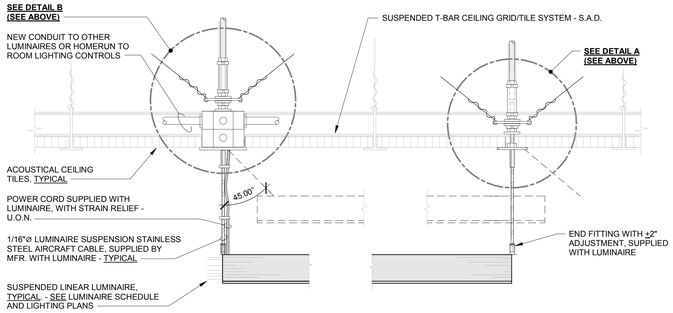

7 SUSPENDED LUMINAIRE: OFF-GRID MOUNTING - AT T-BAR CEILING
NO SCALE

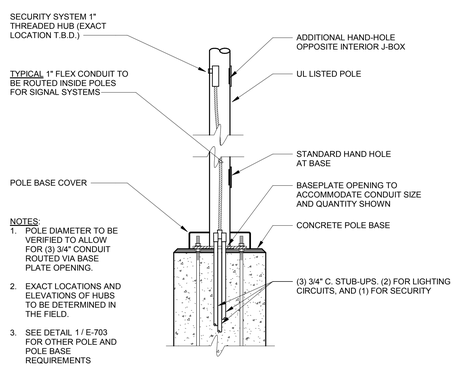

NOTES:
1. POLE DIAMETER TO BE VERIFIED TO ALLOW FOR (3) 3/4" CONDUIT ROUTED VIA BASE PLATE OPENING.
2. EXACT LOCATIONS AND ELEVATIONS OF HUBS TO BE DETERMINED IN THE FIELD.
3. SEE DETAIL 1 / E-703 FOR OTHER POLE AND POLE BASE REQUIREMENTS

8 POLE HAND-HOLE & BASE PLATE OPENING REQUIREMENTS
NO SCALE

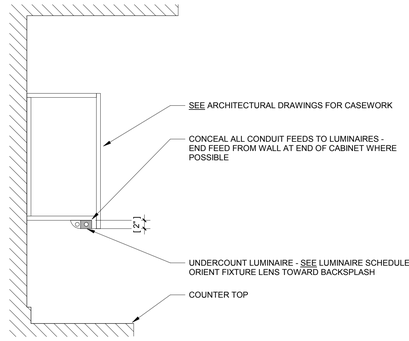

4 UNDER-CABINET LUMINAIRE MOUNTING
NO SCLAE

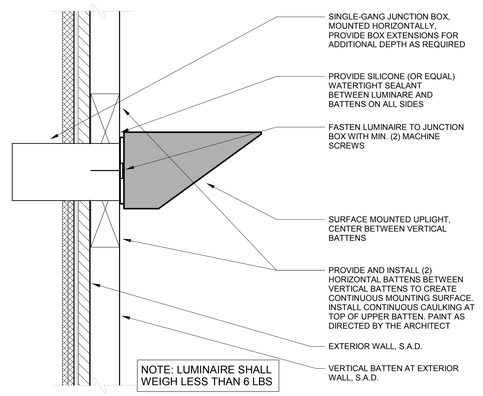

5 UPLIGHT MOUNTING AT EXTERIOR WALL
NOT TO SCALE

NOTES: 1. LUMINAIRE SHALL BE FREE TO SWING 45° FROM THE VERTICAL IN ALL DIRECTIONS WITHOUT HITTING ANY OBSTRUCTIONS.
2. SUPPORT (NON-FEED) DETAIL SIMILAR TO ENLARGED VIEW, EXCEPT NO J-BOX OR CONDUIT.
3. COMPRESSION STRUT ONLY REQUIRED WHEN WEIGHT AT THE SUSPENSION POINT IS >20LBS.

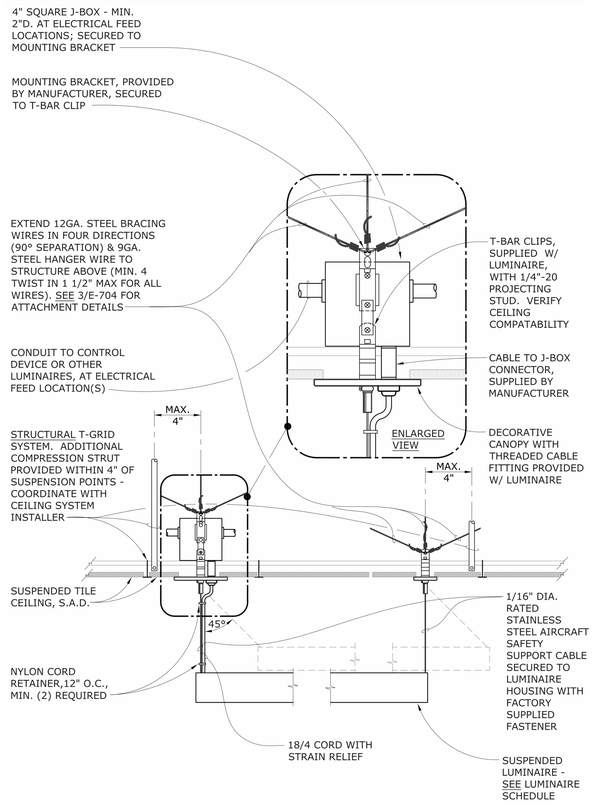

6 SUSPENDED LUMINAIRE - ON-GRID MOUNTING - T-BAR SUSPENDED CEILING
NOT TO SCALE

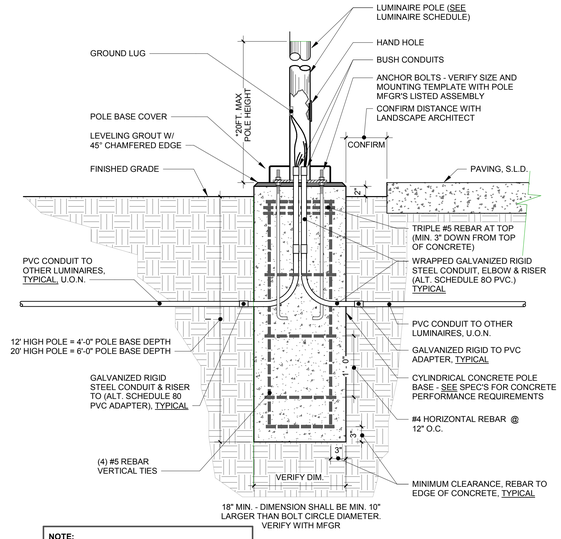

NOTE:
1. BASE FOR POLES UNDER 35 FEET IN HEIGHT ARE NOT SUBJECT TO DSA REVIEW PER DSA 1R A-22
2. SEE DETAIL 8 / E-703 FOR REQUIREMENTS AT POLE BASES WITH SECURITY CAMERA ROUGH-IN.

1 POLE BASE
NO SCALE

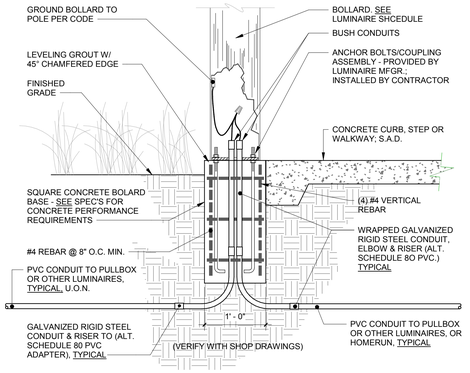

Revit - LBOLL005 - TYPICAL BOLLARD MOUNTING DETAIL

2 TYPICAL BOLLARD MOUNTING DETAIL
NONE

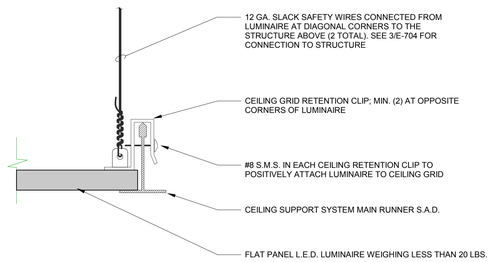

3 RECESSED LUMINAIRE IN SUSPENDED ACOUSTICAL CEILING SUPPORT DETAIL
NOT TO SCALE

30 x 42"
10/17/2023 1:07:46 PM

AGENCY APPROVAL STAMP:

IDENTIFICATION STAMP
DIV. OF THE STATE ARCHITECT
APP: 01-120890 INC:
REVIEWED FOR
SS ☑ FLS ☑ ACS ☑
DATE: 10/25/2023

TLCDARCHITECTURE
520 Third St. #250
Santa Rosa, CA 95401
o: 707.525.5600
f: 707.525.5616
tlcd.com

CONSULTANT:

O'MAHONY & MYER
ELECTRICAL ENGINEERING & LIGHTING DESIGN
4340 REDWOOD HWY., SUITE 245
SAN RAFAEL, CALIFORNIA 94903
(415) 492-0420/FAX (415) 479-9662

STAMP:

REGISTERED PROFESSIONAL ENGINEER
PETER A. COLENBRANDER
No.E14738
Exp. 6/25
ELECTRICAL
STATE OF CALIFORNIA

REVISIONS:

Number	Date	Description

NAPA VALLEY COLLEGE WINE EDUCATION CENTER

2277 NAPA VALLEJO HWY
NAPA, CA 94558

NAPA VALLEY COLLEGE

DSA APPLICATION NUMBER:
01-120890

TLCD PROJECT NUMBER:
21062.00

DATE:
AUGUST 30, 2023

DETAILS

E-703

© THESE DRAWINGS ARE, INSTRUMENTS OF SERVICE AND ARE THE SOLE PROPERTY OF TLCD ARCHITECTURE. ANY USE WITHOUT WRITTEN CONSENT IS PROHIBITED.

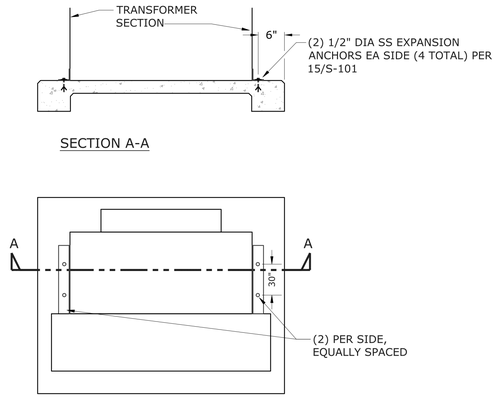

5 TRANSFORMER 'TWEC' ANCHORAGE
NO SCALE

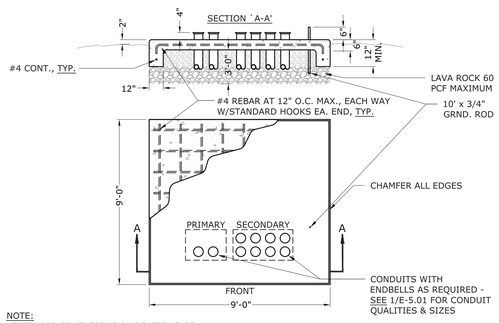

NOTE:
VERIFY PAD DIMENSIONS & LOCATIONS OF PRIMARY SECONDARY CONDUIT TERMINATIONS WITH TRANSFORMER SUPPLIER.

6 TRANSFORMER 'TWEC' PAD
NO SCALE

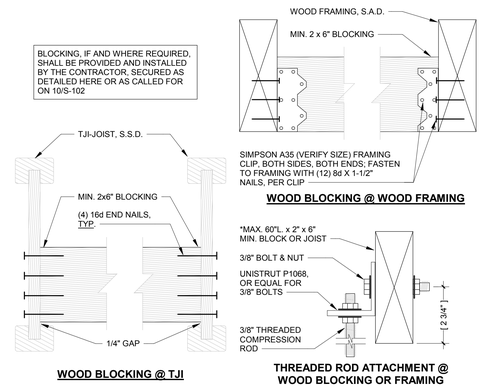

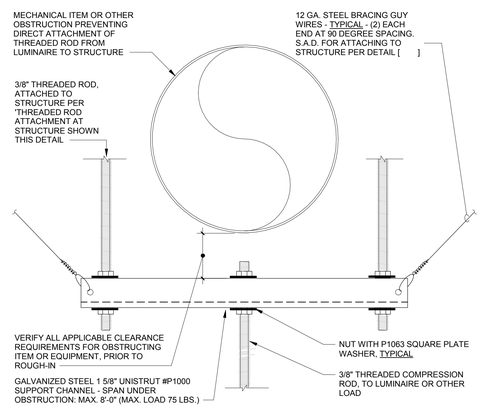

2 THREADED ROD CONNECTION - WOOD - AT OBSTRUCTED CONDITION
NOT TO SCALE

NOTES:
1. LUMINAIRE SHALL BE FREE TO SWING 45° FROM THE VERTICAL IN ALL DIRECTIONS WITHOUT HITTING ANY OBSTRUCTION.
2. CONTRACTOR SHALL PROVIDE AND INSTALL 2"x6" BLOCKING AT ALL NEW FIXTURE SUSPENSION CABLE LOCATIONS.

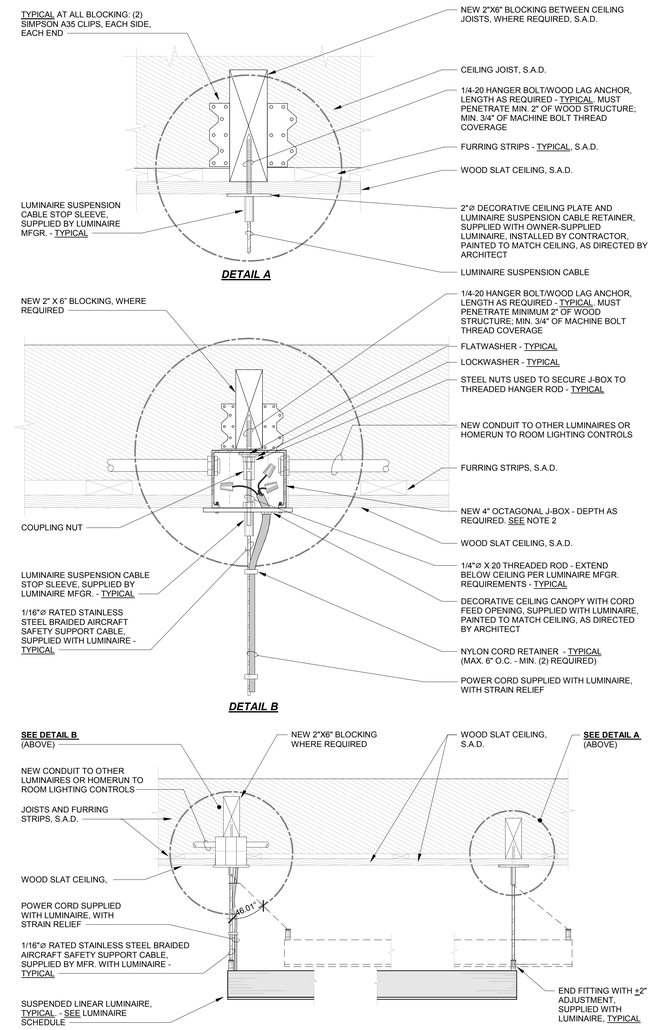

1 SUSPENDED LUMINAIRE MOUNTING - AT EXISTING ACOUSTICAL TILE CEILING
NO SCALE

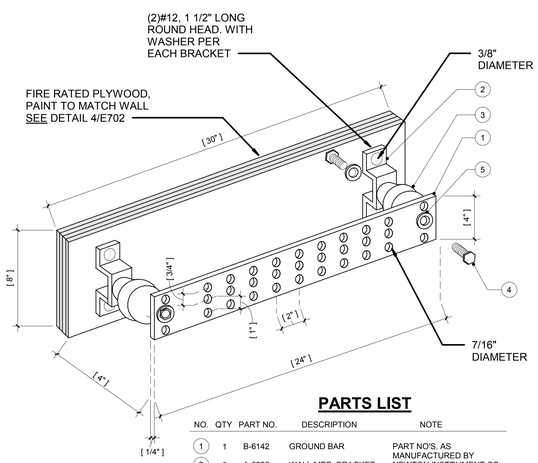

PARTS LIST

NO.	QTY	PART NO.	DESCRIPTION	NOTE
1	1	B-6142	GROUND BAR	PART NO'S. AS MANUFACTURED BY NEWTON INSTRUMENT CO., INC., (919) 575-6426
2	2	A-6056	WALL MTG. BRACKET	
3	2	3061-4	INSULATORS	
4	4	3012-1	5/8 - 11 X 1" HHCS	
5	4	3015-B	5/8" LOCKWASHERS	

7 GROUND BUS BAR - BDF RM 112
1 1/2" = 1'-0"

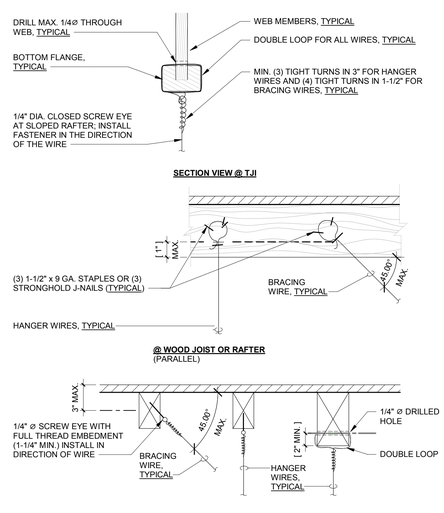

3 HANGER & BRACING WIRES AT WOOD FRAMING
NOT TO SCALE

NOTES:
1. TRIM ALL EXCESS BRACING CABLES FOR A FINISHED AND TRIM FINAL INSTALLATION.
2. CONTRACTOR SHALL COORDINATE PROVISION OF STRUCTURAL BLOCKING IN WALLS FOR SWAY BRACING, PRIOR TO INSTALLATION OF GYP. BOARD.

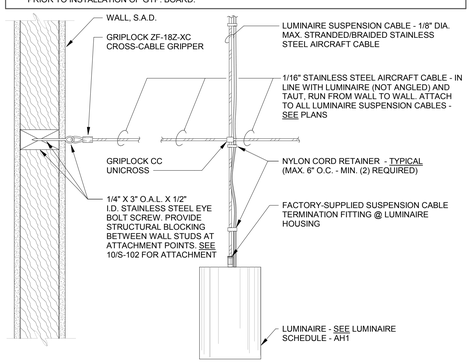

4 SWAY BRACE DETAIL - LUMINAIRE CABLE TO WALL
NOT TO SCALE

AGENCY APPROVAL STAMP:

IDENTIFICATION STAMP
DIV. OF THE STATE ARCHITECT
APP: 01-120890 INC:
REVIEWED FOR
SS ☑ FLS ☑ ACS ☑
DATE: 10/25/2023

TLCDARCHITECTURE
520 Third St. #250
Santa Rosa, CA 95401
o: 707.525.5600
f: 707.525.5616
tlcd.com

CONSULTANT:
O'MAHONY & MYER
ELECTRICAL ENGINEERING & LIGHTING DESIGN
4340 REDWOOD HWY., SUITE 245
SAN RAFAEL, CALIFORNIA 94903
(415) 492-0420/FAX (415) 479-9662

STAMP:
REGISTERED PROFESSIONAL ENGINEER
PETER A. COLEMAN-JONES
No.E14738
Exp. 6/25
ELECTRICAL
STATE OF CALIFORNIA

REVISIONS:

Number	Date	Description

NAPA VALLEY COLLEGE WINE EDUCATION CENTER

2277 NAPA VALLEJO HWY
NAPA, CA 94558

NAPA VALLEY COLLEGE

DSA APPLICATION NUMBER:
01-120890

TLCD PROJECT NUMBER:
21062.00

DATE:
AUGUST 30, 2023

DETAILS

E-704

© THESE DRAWINGS ARE INSTRUMENTS OF SERVICE AND ARE THE SOLE PROPERTY OF TLCD ARCHITECTURE. ANY USE WITHOUT WRITTEN CONSENT IS PROHIBITED.

30 x 42"
10/17/2023 10:7:54 PM

NAPA VALLEY COLLEGE WINE EDUCATION CENTER - 222020 R23

Solar Snap® INSTALLATION INSTRUCTIONS

SNAP, SLIDE & SECURE®

UL LISTED PV Mounting System E465365

TABLE OF CONTENTS

PG 2: Required Components, Base Supports Overview & Required Tools
PG 3: Parts Identification
PG 4: Helpful Tips, Planning Your Layout
PG 5: Cantilever vs. Standard Installation
PG 6: L-Foot Installation
PG 7: SSMR Installation for Metal Roofs
PG 8: QuickBOLT Installation for Asphalt Roofs
PG 9: Membrane Pad Installation for Membrane Roofs
PG 10: Concrete Cover Board Installation for Island Style Roofs
PG 11: Rail Assembly
PG 12: PV Panel Assembly
PG 13: Splice Bar Attachments & Ground Lugs
PG 14: Electrical Diagram
PG 15: PV Panels Used in UL 2703 Test Program

by ACE CLAMP® Innovative Roofing Solutions™

RACK SOLAR MOUNTING FOR SSMR

Single Lock | Double Lock | Snap Lock | T-Panel | Bulb Style

Solar Snap™ Racking System

US Patent# 10,469,022

- Snap fit provides fast & easy installation
- One of the strongest racking systems on the market
- Rigorous 3rd party testing ensures quality & performance
- Adjustable height and width fits multiple applications
- Serrated hex nut locks tight and prevents back out
- Sold in 168" (14') lengths. Custom sizes available upon request
- Mounting brackets included!
- Tested to UL 2703 and to withstand up to Cat 5 winds (contact engineering for specific roof application)
- Anodizing upon request
- Assembly includes Snap Anchor, Rail, Connector Plate and End Cap. L-Foot assembly, Grounding Stud and Clamps sold separately.

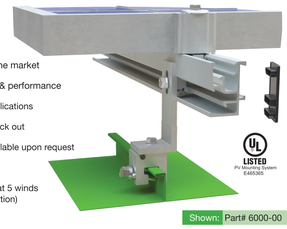

UL LISTED PV Mounting System E465365

Shown: Part# 6000-00

Specifications

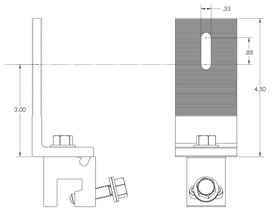

ACE CLAMP® Innovative Roofing Solutions™

Easy terms • No contracts • No minimums

*Based on typical contractor experiences. Photos shown are for representative purposes only. Actual product may vary. Design subject to change without notice. Additional panel profiles & torque specs: aceclamp.com. Always use proper safety equipment when working on a roof. Do NOT use as a personal fall safety device. V022823

A2® INSTALLATION INSTRUCTIONS

Single Lock | Double Lock | Trapezoidal

REQUIRED TOOLS

Recognized for mechanical load testing per UL2703 and UL467 grounding

Industrial grade screw gun | 9/16" hex socket | Calibrated torque wrench

STEP #1 Tilt AceClamp® A2® so pins open to fit your roof profile. They come 100 in a box.

STEP #2 Position the AceClamp® A2® onto the roof panel. See illustrations below for panel orientation.

STEP #3 Tighten AceClamp® A2® on roof panel with 9/16" socket.

STEP #4 Torque AceClamp® A2® with a calibrated torque wrench to recommended specs. (See Torque Spec doc or call AceClamp Engineering)

At no time should you use the AceClamp® A2® as part of your fall protection system!

MADE IN THE USA

The management at PMC Industries, Inc. is committed to providing you, our customer the fastest, easiest and safest attachment devices for your snow retention system. We welcome suggestions that will make your job easier.

ACE CLAMP® Innovative Roofing Solutions™ | a product of PMC Industries Inc.

87 Spring Lane Plainville, CT 06062 • P: 860.351.0686 F: 860.351.0689 www.aceclamp.com V040119

*Photos shown are for representative purposes only. Actual product may vary. Design subject to change without notice. Always use OSHA approved safety equipment and procedures when working on a roof. Not responsible for typographical errors.

A2® SSMR Clamp

- Pre-assembled clamp allows for a quick and easy installation
- Non-penetrating sliding pin design does not damage the panel
- High wind-load resistance
- Available for one, two or three-hole brackets (2-6 inches in height)
- Engineered for snow retention systems on single, double or snap-lock SSMR
- Aircraft quality aluminum
- All stainless-steel hardware
- ***Installs in half the time of competitive products****

Shown: Part# 5056-A

FULLY ASSEMBLED CLAMPS READY TO INSTALL

Specifications

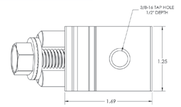

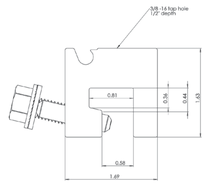

RECOMMENDED TORQUE SPECS

	22ga steel	Aluminum	Copper
A2®	195	155	n/a

The above is a general recommendation which varies by material type and panel thickness. For additional panel profiles and torque specs visit www.AceClamp.com

ACE CLAMP® Innovative Roofing Solutions™

Free Samples and Ordering: 860-351-0686 / www.AceClamp.com

*Based on typical contractor experiences. Photos shown are for representative purposes only. Actual product may vary. Design subject to change without notice. Additional panel profiles & torque specs: aceclamp.com. Always use proper safety equipment when working on a roof. Do NOT use as a personal fall safety device.

V041122

Cantilever vs. Standard Layout

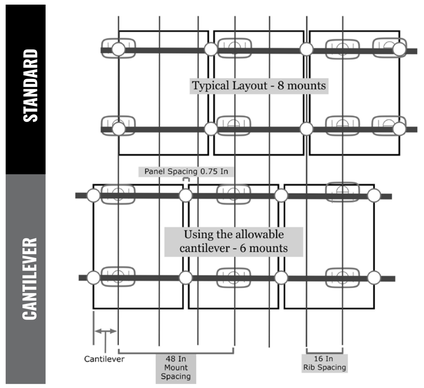

- The Solar Snap® racking was tested at UL with a 48 inch span between mounts. The Cantilever was tested at 40% of the maximum span or 19.2 inches.
- The illustration shows the rib spacing on a standing seam roof at 16 inches (for convenience) the distance between the mounts securing the racking to the roof ribs is 48 inches. The Cantilever is the length that the edge of the PV panel mounted on the rail is allowed to extend beyond the first set of mounts.
- The top illustration shows that eight mounts are required if the cantilever is not incorporated. By shifting the array to incorporate the maximum cantilever only six mounts are needed.
- Fewer mounts show a direct hardware savings plus the fewer mounts result in labor $$$ saved, especially in larger solar arrays.
- Contact the AceClamp engineers for help in optimizing your array.

Questions? 860-351-0686 | Documentation: www.AceClamp.com

*Photos shown are for representative purposes only. The actual product may vary. Design is subject to change without notice. Always use OSHA- approved safety equipment and procedures when working on a roof. Not responsible for typographical errors.

HOW TO PLAN YOUR LAYOUT

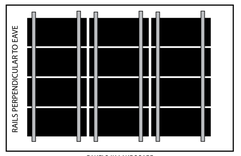

PANELS IN LANDSCAPE

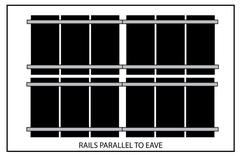

PANELS IN PORTRAIT

HELPFUL TIPS

- With an appropriate mounting layout (portrait or landscape) from the design engineer, start the process of laying out your array. Refer to SEIA's guidelines for distances from obstructions, edges, and eves before marking roof structures.
- Allow for walkways if local building codes or fire department guidelines are required.
- Ensure roof structure is sound and has a minimum of 1/2" CDX Plywood when required by local building codes.
- All ISR base supports are supplied with an approved EPDM membrane seal. (Other base mounts may vary)
- Indicate the PV panel thickness, and we will ship End Supports made to fit.

Questions? 860-351-0686 | Documentation: www.AceClamp.com

*Photos shown are for representative purposes only. The actual product may vary. Design is subject to change without notice. Always use OSHA- approved safety equipment and procedures when working on a roof. Not responsible for typographical errors.

PARTS IDENTIFICATION

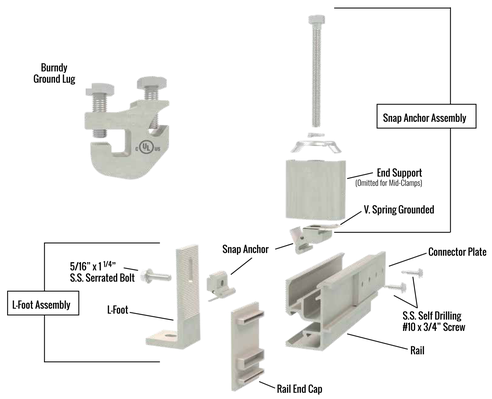

*Product shown may vary from actual. Not shown to scale.

Questions? 860-351-0686 | Documentation: www.AceClamp.com

*Photos shown are for representative purposes only. The actual product may vary. Design is subject to change without notice. Always use OSHA- approved safety equipment and procedures when working on a roof. Not responsible for typographical errors.

REQUIRED COMPONENTS

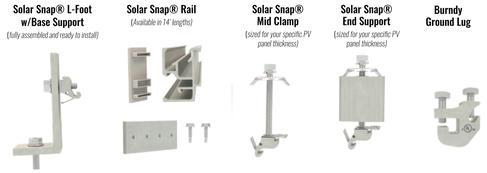

BASE SUPPORTS

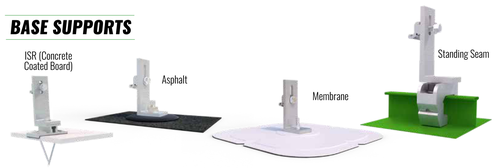

REQUIRED TOOLS

Questions? 860-351-0686 | Documentation: www.AceClamp.com

*Photos shown are for representative purposes only. The actual product may vary. Design is subject to change without notice. Always use OSHA- approved safety equipment and procedures when working on a roof. Not responsible for typographical errors.

AGENCY APPROVAL STAMP:

IDENTIFICATION STAMP
DIV. OF THE STATE ARCHITECT
APP: 01-120890 INC:
REVIEWED FOR
SS ☑ FLS ☑ ACS ☑
DATE: 10/25/2023

TLCDARCHITECTURE
520 Third St. #250
Santa Rosa, CA 95401
o: 707.525.5600
f: 707.525.5616
tlcd.com

CONSULTANT:

O'MAHONY & MYER
ELECTRICAL ENGINEERING & LIGHTING DESIGN
4340 REDWOOD HWY., SUITE 245
SAN RAFAEL, CALIFORNIA 94903
(415) 492-0420/FAX (415) 479-9662

STAMP:

REGISTERED PROFESSIONAL ENGINEER
PETER A. COLEMAN JAMES
No.E14738
Exp. 6/25
ELECTRICAL
STATE OF CALIFORNIA

REVISIONS:

Number	Date	Description

NAPA VALLEY COLLEGE WINE EDUCATION CENTER
2277 NAPA VALLEJO HWY
NAPA, CA 94558

NAPA VALLEY COLLEGE

DSA APPLICATION NUMBER: 01-120890
TLCD PROJECT NUMBER: 21062.00
DATE: AUGUST 30, 2023

DATASHEETS

E-901

© THESE DRAWINGS ARE INSTRUMENTS OF SERVICE AND ARE THE SOLE PROPERTY OF TLCD ARCHITECTURE. ANY USE WITHOUT WRITTEN CONSENT IS PROHIBITED.

30 x 42"
10/17/2023 1:07:59 PM

NAPA VALLEY COLLEGE WINE EDUCATION CENTER - 222020 R23

Photovoltaic Panels Assembly

STEP #1 — With a ruler or snap line, determine the location of the first row of Photovoltaic Panels.

STEP #2 — Before assembly, be sure that the screws in the Mid and End Supports are backed out so that threads are not protruding through the bottom of the Snap Anchor.

STEP #3 — Insert Snap Anchor with End Support into the rail with V. Spring grounded towards the thin side of the rail until you hear an auditable click.

If the Snap Anchor's V-Spring is fully compressed, then a new Snap Anchor must be used.

STEP #4 — Thread bolt loosely. Repeat this step for the second Top Snap Anchor with End Support.

STEP #5 — Insert bottom edge of PV Panel so it fits against the End Support. Thread bolt until snug.

STEP #6 — Proceed to the top of the Photovoltaic Panel and repeat the process with (2) Mid-Clamps. Repeat for all arrays in a row finishing with the last (2) End Supports.

STEP #7 — Once the first column of Photovoltaic Panels are installed, you can repeat the process for the complete array.

STEP #8 — Attach End Cap to finish off the solar array.

Rail Assembly

-BEFORE YOU BEGIN-

CLAMP PREPARATION

Before assembly, be sure that the bolts in the L-Foot, Mid-Clamp and End-Clamp assemblies are backed out so that the bolt is flush with the bottom of the Snap Anchor. The bolts are installed correctly at the factory but sometimes move in or out from vibration during shipping.

Do not install with bolts pre-tightened

Correct: Bolt flush with Snap Anchor

Assure bolts are flush with Snap Anchors

STEP #1 — Assure all Base Supports installed are oriented with the Snap Anchor on the L-Foot facing inward. Adjust all L-Foot and Snap Anchors as required.

STEP #2 — With two people holding both ends of the Rail, bring rail towards Snap Anchor and snap the rail into Snap Anchor at each end, then proceed to snap-in remainder of Snap Anchors.

STEP #3 — Proceed to hand-tighten all L-Foots to Base Supports, then hand-tighten all Snap Anchors.

STEP #4 — Align Rail to the desired height and tighten the first and last Snap Anchor. Continue to tighten the remainder of Snap Anchors. Repeat for the second Rail. Torque to recommended specs.

SSMR Installation

Please refer to the below chart for the appropriate torque specs. Do NOT tighten with impact gun. For other styles or materials not shown here, feel free to contact the Engineers at AceClamp for further assistance.

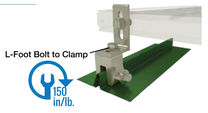

COMPONENT/CONNECTION	TORQUE (in-lbs)
Mid/End Support Assembly connects the PV Module Frame to Solar Rail	100
Ground Lug connects Solar Rails and/or 6-10 AWG Solid Copper Wire	100
Solar Rail and L-Foot connection	125
Burndy WEEB-BNDJMP6-7 connects Solar Rails and/or 6-10 AWG Solid Copper Wire	120
L-Foot to Roof Mount Hardware	150

PANEL STYLE	PANEL MATERIAL	PANEL THICKNESS	ACECLAMP	TORQUE (in-lbs)
snap-lock	steel	24 ga	A2® or A2®N	195
snap-lock	aluminum	0.040	A2® or A2®N	165
snap-lock	zinc	0.8mm	A2®	165
single-lock	steel	22 ga or 24 ga	A2®	195
single-lock	aluminum	0.032/0.040	A2®	165
double-lock	steel	22 ga or 24 ga	A2®	195
quad-lock	steel	22 ga or 24 ga	ML®	175
t-panel	steel	22 ga or 24 ga	ML®	175
bulb-style	steel	22 ga or 24 ga	ML®	175
bulb-style	aluminum	0.050	ML®	150
bulb-style	aluminum	0.032/0.040	ML®	135
nail-base 1.5"	steel	24 ga	A2®N	195
t-panel	steel	22 ga or 24 ga	A2®T	195
bulb-style	aluminum	0.050	A2®T	195
bulb-style	aluminum	24 ga	A2®T	195
bulb-style	aluminum	22 ga or 24 ga	A2®T	195
nail-base 1.0"	steel	24 ga	A2®Nw	165

PRECAUTIONS

IMPORTANT FOR STABILITY! Adjacent L-Foots ***MUST*** *be installed* ***opposite the previous row****, and rails must be installed with the* ***grooved side facing the L-Foot.***

You know it's installed correctly if adjacent rails are either both inside or both outside.

L-FOOT INSTALLATION

CORRECT

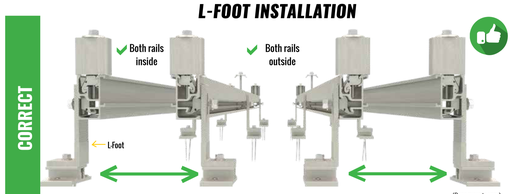

INCORRECT

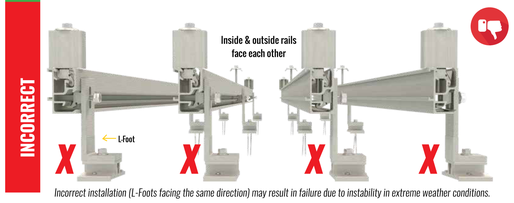

Incorrect installation (L-Foots facing the same direction) may result in failure due to instability in extreme weather conditions.

(Base mounts vary)

PV Specifications

The following PV panels were included in the UL 2703 test program which resulted in the following ratings:

Fire Ratings:

- Solar Snap® has achieved a Class A rating on steep roofs (>/_ 9.5o) and over any Class A rated roof system. (Note: Fire Testing exceptions for specific modules below)

Mechanical Load Testing:

- Maximum module size: 24.2 SF
- Module orientation perpendicular to racking
- Tests conducted with 48" span between mounts and 40% cantilever (19.2")
- System Design Load Rating: 40 psf upward, 40 psf downward, 10 psf lateral
- The system's positive and negative load rating is either 40 psf or limited to the maximum load rating of the module being installed.

REC Solar (CSA Listed):

Alpha Series 60 Cell: RECxxxAA (xxx = 340, 345, 350, 355, 360, 365, 370, 375, 380 Watts)
Alpha Series 72 Cell: RECxxxAA72 (xxx = 430, 435, 440, 445, 450 Watts) (Not tested for Fire)

Mission Solar (UL Listed. QIIA.E364743):

MSE Perc 60 Cell: MSExxxSR8T (xxx = 315, 320, 325 Watts)
MSE Perc 60 Cell: MSExxxSR8K (xxx = 320, 325, 330 Watts)
MSE Perc 72 Cell: MSExxxSR9S (xxx = 375, 380, 385, 390 Watts)
MSE Perc 72 Cell: MSExxxSX6W (xxx = 405, 410, 415, 420, 425 Watts)
MSE Perc 60 Cell: MSExxxSX5T (xxx = 330, 335, 340, 345 Watts)
MSE Perc 60 Cell: MSExxxSX5K (xxx = 335, 340, 345, 350 Watts)

Canadian Solar (CSA Listed):

CS1H 60 Cell: CS1H-xxx (xxx = 320, 325, 330, 335, 340, 345-MS Watts) (Not tested for Fire)
CS3W 60 Cell: CS3W-xxx (xxx = 395, 400, 405, 410, 415, 420-P Watts)
CS3W 72 Cell: CS3W-xxx (xxx = 425, 430, 435, 440, 445, 450-P Watts)

Jinko Solar (UL Listed):

Eagle 66 Cell HM: JKMxxxM-6RL3-B (xxx = 365, 370, 375, 380, 385, 390, 395. 400, 405 Watts)
Eagle 78 Cell HC 72M: JKMxxxM-7RL3 (xxx = 430, 435, 440, 445, 450, 455, 460, 465, 470, 475 Watts)

See individual module installation instructions for details on Solar Snap clamping locations/method.
Maximum 25A over current protection device rating (OCPD)

Electrical Diagram

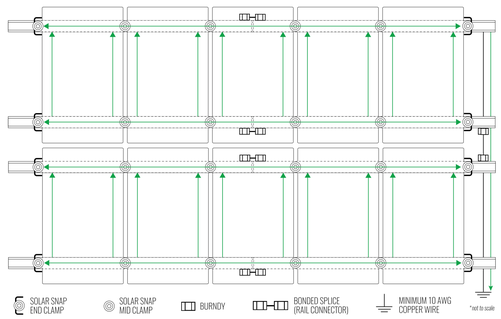

⚠ IMPORTANT SAFETY ALERTS ⚠

- Thermal breaks control the amount of expansion for several consecutive lengths of Solar Rail. The expansion rate will be directly related to hot and cold temperatures changes.
- Every 50' to 100' will require a ½" to 1" expansion joint. Please refer to a structural engineer to clarify proper gaps for your particular application.
- No Photovoltaic Panels should span a Thermal Break.
- The installer/end-user is responsible for assuring that all engineering studies and data are complete for the installation and that all structural and electrical code requirements have been met. DO NOT use the AceClamp as any part of your fall protection apparatus.
- To prevent risk of galvanic corrosion do not allow the bare copper grounding wire to come in contact with any aluminum components.
- Ensure that direct to earth grounding meets the latest edition of the National Electric Code: Grounding and Bonding.
- Any loose components or fasteners found during periodic maintenance shall be retightened in accordance the original instructions.
- Any components showing signs of damage or corrosion that compromise safety shall be replaced immediately.
- In the event that any racking components or PV panels must be removed for maintenance, be sure that the ground path is not interrupted by adding ground lugs and copper wires across any missing components during maintenance.

Splice Bar Attachment

(only for standard rails)

STEP #1 — Ensure L-Feet are loosely attached for the first rail section.

STEP #2 — Insert Connector Plate into slot on the first rail and slide to center on the second length of the rail.

STEP #3 — Center Connector Plate between both rails, leaving a minimum 1/8" gap and fasten with self-drilling stainless steel screws.

STEP #4 — Continue to secure L Feet to the proper height to level the system.

⚠ Note: Splices are structural but still should be supported a minimum of 12" to 16" in from each side of the splice. No splice is allowed outside the cantilever.

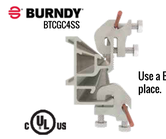

Ground Lug: Expansion Joint

(used as a Thermal Break)

Use a Burndy Bonding Ground Connector. Firmly snap Ground Lug assembly in place.

Expansion joints:

L-FOOT SIDE

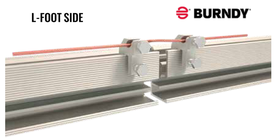

RAIL-CONNECTION SIDE

Use two screws on one side of the rail only for expansion joints.

AGENCY APPROVAL STAMP:

IDENTIFICATION STAMP
DIV. OF THE STATE ARCHITECT
APP: 01-120890 INC:
REVIEWED FOR
SS ☑ FLS ☑ ACS ☑
DATE: 10/25/2023

TLCDARCHITECTURE
520 Third St. #250
Santa Rosa, CA 95401
o: 707.525.5600
f: 707.525.5616
tlcd.com

CONSULTANT:

O'MAHONY & MYER
ELECTRICAL ENGINEERING & LIGHTING DESIGN
4340 REDWOOD HWY., SUITE 245
SAN RAFAEL, CALIFORNIA 94903
(415) 492-0420/FAX (415) 479-9662

STAMP:

REGISTERED PROFESSIONAL ENGINEER
PETER A. COLEMAN JAMES
No.E14738
Exp. 6/25
ELECTRICAL
STATE OF CALIFORNIA

REVISIONS:

Number	Date	Description

NAPA VALLEY COLLEGE WINE EDUCATION CENTER

2277 NAPA VALLEJO HWY
NAPA, CA 94558

NAPA VALLEY COLLEGE

DSA APPLICATION NUMBER:
01-120890

TLCD PROJECT NUMBER:
21062.00

DATE:
AUGUST 30, 2023

DATASHEETS

E-902

© THESE DRAWINGS ARE INSTRUMENTS OF SERVICE AND ARE THE SOLE PROPERTY OF TLCD ARCHITECTURE. ANY USE WITHOUT WRITTEN CONSENT IS PROHIBITED.

30 x 42"
10/17/2023 1:08:19 PM

NAPA VALLEY COLLEGE WINE EDUCATION CENTER - 222020 R23

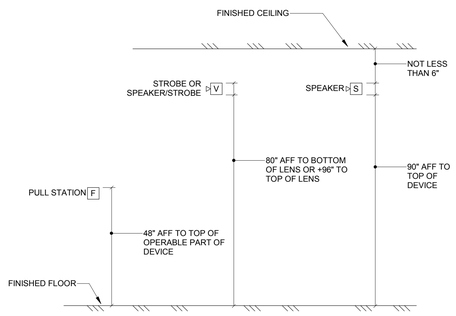

1 FIRE ALARM DEVICE MOUNTING HEIGHT DETAIL
NO SCALE

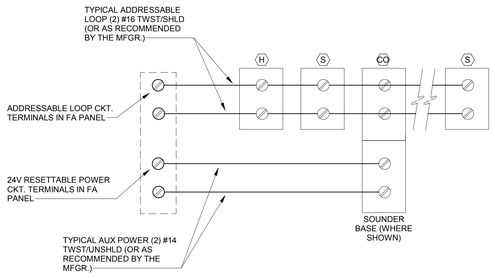

2 TYPICAL ADDRESSABLE INITIATION LOOP WIRING
NO SCALE

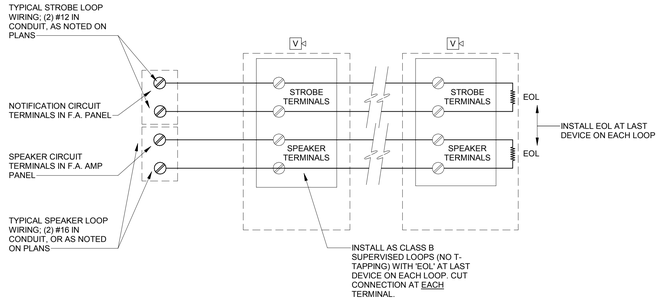

3 TYPICAL NOTIFICATION / SPEAKER CIRCUIT WIRING
NO SCALE

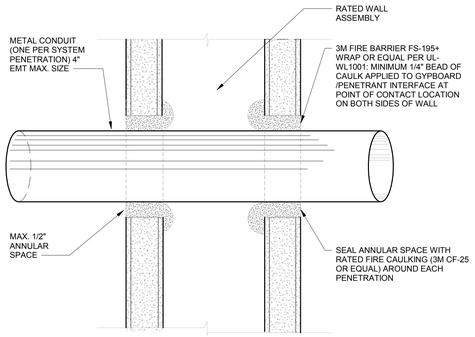

4 CONDUIT PENETRATION IN RATED WALL - UL WL1001
NO SCALE

SEQUENCE OF OPERATION MATRIX

		RESPONSE								
		ANNUNCIATE AT FIRE ALARM CONTROL PANEL (FACP)	ANNUNCIATE AT FIRE ALARM ANNUNCIATOR PANEL (FAAP)	ANNUNCIATE AT OFF-SITE MONITORING STATION	ANNUNCIATE AUDIBLE/VISUAL DEVICES IN ALL AREAS	SHUTDOWN OF APPLICABLE HVAC UNIT AND/OR MOTORIZED DAMPERS	RELEASE APPLICABLE MAGNETICALLY-HELD DOORS	ACTIVATE ELEVATOR RECALL	FACILITY PERSONNEL TO NOTIFY FIRE DEPARTMENT	ACTIVATE CO DETECTION SOUNDER BASE
ACTIVATION OF INITIATION DEVICES	MANUAL PULL STATION	X	X	X	X	X	X	X	X	
	AREA SMOKE OR HEAT DETECTOR	X	X	X	X	X	X	X	X	
	SPECIAL EXTINGUISHING ANSUL SYSTEM	X	X	X	X	X	X	X	X	
	DUCT SMOKE DETECTOR	X	X	X	X	X	X	X	X	
	SPRINKLER FLOW SWITCH	X	X	X	X	X	X	X	X	
	CARBON MONOXIDE (CO) DETECTOR	X	X							X
MALFUNCTION	INITIATION CIRCUITS	X	X	X						
	NOTIFICATION APPLIANCE CIRCUITS	X	X	X						
	FIRE ALARM CONTROL PANEL (FACP)	X	X	X						
	FIRE ALARM ANNUNICATOR PANEL (FAAP)	X	X	X						
	FIRE ALARM EXTENDER PANEL (FAEP) OR REMOTE AMPLIFIER	X	X	X						
	POWER FAILURE	X	X	X						
SUPERVISORY SWITCHES	SPRINKLER TAMPER SWITCH	X	X	X						
	POST INDICATOR VALVE	X	X	X						
	CHECK VALVE TAMPER SWITCH	X	X	X						

SEQUENCE OF OPERATION NOTES

1. ACTIVATION OF ANY INITIATION DEVICE WILL PLACE THE FIRE ALARM CONTROL PANEL IN ALARM MODE AND WILL ACTIVATE ALL NOTIFICATION APPLIANCES. THE FIRE ALARM CONTROL PANEL SHALL DISPLAY THE ZONE (NON-ADDRESSABLE) OR DEVICE (ADDRESSABLE) OF THE ACTIVATED INITIATION DEVICE(S).
2. UPON ALARM CONDITION, AUTO-DIALER TO NOTIFY THE OFF-SITE MONITORING STATION, AND AUTHORIZED SCHOOL PERSONNEL SHALL NOTIFY THE FIRE DEPARTMENT AND INITIATE EVACUATION OF STUDENTS AND FACULTY AS PER THE SCHOOL'S EVACUATION PLAN.
3. WHEN THE PANEL IS ALARM CONDITION, THE NOTIFICATION APPLIANCES MAY BE DEACTIVATED ("SILENCED") AT THE FIRE ALARM CONTROL PANEL. ACTIVATION OF ANOTHER INITIATION DEVICE WILL PLACE THE CONTROL PANEL BACK IN ALARM CONDITION AND WILL AGAIN ACTIVATE ALL NOTIFICATION APPLIANCES.
4. FAILURE OF THE FIRE ALARM SYSTEM COMPONENTS, WIRING OR POWER SUPPLY SHALL PLACE THE FIRE ALARM CONTROL PANEL IN TROUBLE CONDITION, RESULTING IN AN AUDIBLE AND VISUAL (LED) ALARM AT THE FIRE ALARM CONTROL PANEL ONLY. THE AUDIBLE ALARM MAY BE SILENCED AT THE CONTROL PANEL, BUT THE VISUAL ALARM WILL REMAIN ACTIVE UNTIL THE FAILED CONDITIONS ARE CORRECTED AND CLEARED.
5. UPON TROUBLE CONDITION, AUTO-DIALER TO NOTIFY THE OFF-SITE MONITORING STATION, AND AUTHORIZED SCHOOL PERSONNEL SHALL NOTIFY THE AUTHORIZED TECHNICIAN TO CORRECT THE TROUBLE CONDITION.
6. UPON CO DETECTION, IT SHALL ANNUNCIATE AN ALARM AT THE FACP AND REMOTE ANNUNCIATOR ONLY AND SHALL ACTIVATE THE CO DETECTOR SOUNDER BASE WITH TEMPORAL 4 FORM IN THE CLASSROOM. SCHOOL PERSONNEL TO NOTIFY THE OCCUPANTS IMMEDIATELY AND INITIATE EVACUATION OF STUDENTS & FACULTY.

GENERAL FIRE ALARM NOTES

1. FINAL FIRE ALARM TEST SHALL BE MADE WITH THE DSA INSPECTOR OF RECORD (IOR). LOCAL FIRE AUTHORITY SHALL BE NOTIFIED OF DATE AND TIME OF FINAL ALARM TESTING AND SHALL ASSIST/WITNESS SUCH TESTING WHEN ABLE. DSA/ARCHITECT/ENGINEER AND OWNER SHALL BE NOTIFIED A MINIMUM OF (48) HOURS PRIOR TO THE FINAL INSPECTION AND/OR TESTING.
2. FIRE ALARM CONTRACTOR SHALL PROVIDE SYSTEM PROGRAMMING FOR SUPERVISORY MONITORING PER CBC SECTION 901.6.2. MONITORING SHALL BE TESTED AND VERIFIED AS SENDING THE CORRECT SIGNALS IN CONJUNCTION WITH FINAL ACCEPTANCE TEST. OWNER SHALL BE RESPONSIBLE FOR ESTABLISHING A FIRE SYSTEM MONITORING CONTRACT AND/OR PROVISIONS
3. UNDERGROUND AND EXTERIOR CONDUITS SHALL HAVE WATERTIGHT FITTINGS.
4. FIRE ALARM DEVICE MOUNTING HEIGHTS:
   a. PULL STATION: 48" TO TOP OF OPERATOR ABOVE FINISHED FLOOR
   b. SPEAKER INTERIOR/EXTERIOR: 90" MIN. TO TOP OF DEVICE ABOVE FINISHED FLOOR, OR 100" MAX TO TOP OF DEVICE, BUT NOT LESS THAN 6" FROM CEILING.
   c. WALL MOUNTED STROBE OR SPEAKER/STROBE: BETWEEN 80" TO BOTTOM OF DEVICE LENS TO +96" TO TOP OF DEVICE LENS ABOVE FINISH FLOOR, BUT NOT LESS THAN 6" FROM CEILING.
   d. CONTROL PANELS / ANNUNCIATORS: 48" TO BOTTOM OF EQUIPMENT.
5. AUDIBLE FIRE ALARM SYSTEM LEVEL SHALL BE AT LEAST 15dBA ABOVE THE AVERAGE AMBIENT SOUND LEVEL IN ALL OCCUPIABLE AREAS, OR 5 dBA ABOVE THE MAXIMUM SOUND LEVEL HAVING A DURATION OF AT LEAST 60 SECONDS, WHICHEVER IS GREATER, MEASURED AT 5 FEET ABOVE THE FLOOR. AUDIBLE SIGNALS SHALL NOT BE LESS THAN 75dBA AT 10 FEET, OR MORE THAN 110dBA AT THE MINIMUM HEARING DISTANCE.
6. AUDIBLE DEVICES SHALL BE SYNCHRONIZED TEMPORAL THREE DISTINCTIVE FIRE ALARM SOUND PER NFPA 72.
7. APPLICABLE CODES:
   a. CBC 2022; CEC 2022; CMC 2022; CFC 2022.
   b. STATE FIRE MARSHAL TITLE 19, PUBLIC SAFETY.
   c. NFPA 72, 2022 EDITION W/CA AMENDMENTS, FIRE ALARM CODE.
1. STROBES SHALL FLASH AT A RATE NOT EXCEEDING TWO FLASHES PER SECOND, AND NOT LESS THAN ONE FLASH EVERY SECOND. THE DEVICE SHALL HAVE A PULSING LIGHT SOURCE NOT LESS THAN 15 CANDELA. VISUAL DEVICES WITHIN 55 FEET OF EACH OTHER SHALL BE SYNCHRONIZED.
2. FIRE ALARM CONTRACTOR SHALL PROVIDE A COPY OF NFPA 72 SYSTEM RECORD OF COMPLETION, SYSTEM RECORD OF INSPECTION AND TESTING, AND THE "EMERGENCY COMMUNICATIONS SUPPLEMENTARY RECORD OF COMPLETION", TO THE INSPECTOR OF RECORD IOR/DSA, SCHOOL DISTRICT, ARCHITECT AND LOCAL FIRE AUTHORITY.
3. POWER SERVICE TO THE FACP, REMOTE POWER SUPPLIES, AND CENTRAL STATION AUTO DIALER SHALL BE ON A DEDICATED BRANCH CIRCUIT WITH A RED MARKING AND IDENTIFIED AS "FIRE ALARM CIRCUIT CONTROL".
4. INSTALL ALL WIRING IN CONDUIT, MIN. 3/4" CONDUIT. ALL FIRE ALARM SYSTEM WIRING SHALL BE FPL (FIRE POWER LIMITED) OR FPLP (FIRE POWER LIMITED PLENUM RATED) AS REQUIRED FOR APPLICATION. WIRING IN CONDUIT ABOVE GROUND MAY BE THHN OR THWN.
5. CONDUIT AND WIRING SHALL BE PER MANUFACTURERS REQUIREMENTS.
6. ALL FIRE ALARM COMPONENTS SHALL BE SECURED TO MOUNTING SURFACES PER MANUFACTURERS SPECIFICATIONS. NO SINGLE DEVICES/EQPT. SHALL EXCEED 20LBS. WITHOUT SPECIAL MOUNTING DETAILS.
7. INSTALLATION OF SYSTEM SHALL NOT BE STARTED UNTIL COMPLETE SET OF CONSTRUCTION DOCUMENTS (WITH DEVICE TYPES AND LISTINGS) HAVE BEEN REVIEWED AND APPROVED BY DSA.
8. A STAMPED SET OF APPROVED PLANS SHALL BE ON THE JOB SITE AT ALL TIMES AND SHALL BE USED FOR INSTALLATION.
9. ANY DISCREPANCIES BETWEEN THE CONTRACT DOCUMENTS AND CODE OR RECOGNIZED STANDARDS SHALL BE BROUGHT TO THE ATTENTION OF DSA AND ARCHITECT/ENGINEER OF RECORD.
10. THE CONTRACTOR SHALL INSTALL AND ADJUST ALL DEVICES TO MAXIMIZE PERFORMANCE AND TO MINIMIZE FALSE ALARMS.
11. SMOKE DETECTORS SHALL NOT BE ANY CLOSER THAN 1 FOOT FROM FIRE SPRINKLER HEADS OR 3 FEET FROM ANY SUPPLY DIFFUSER. IN AREAS OF CONSTRUCTION OR POSSIBLE DAMAGE /CONTAMINATION, INSTALLED DEVICES SHALL BE COVERED UNTIL AREA IS READY TO BE TURNED OVER TO THE OWNER.
12. PER CEC STANDARDS, ALL WIRING IS TO BE PULLED THROUGH EACH JUNCTION BOX AND CONNECTED DIRECTLY TO EACH FIRE ALARM DEVICE. DO NOT SPLICE WIRE. THERE MUST BE AT LEAST 6" OF WIRE LEAD FROM THE BOX TO THE DEVICE. ALL BOXES TO BE SIZED PER CEC FOR PROPER VOLUME WITH INSTALLED WIRING AND DEVICES.
13. SUPERVISING STATION: AUTOMATIC FIRE ALARM SYSTEMS SHALL TRANSMIT THE ALARM, SUPERVISORY AND TROUBLE SIGNALS TO AN APPROVED SUPERVISING STATION AS REQUIRED BY NFPA 72, AS AMENDED BY CFC CHAPTER 80. THE SUPERVISION STATION SHALL BE LISTED AS EITHER UUFX OR UUJS BY UNDERWRITERS LABORATORY OR SHALL MEET THE REQUIREMENTS OF FACTORY MUTUAL RESEARCH APPROVAL STANDARD 3011.
14. A DOCUMENTATION CABINET SHALL BE INSTALLED ADJACENT TO THE FACP IN THE MAIN ELECTRICAL ROOM (NFPA 72, 7.7.2.1). SPACE AGE ELECTRONICS INC, ACERBOX FAD SERIES (#SSU00685 OR EQUAL).
15. ALL RECORD DOCUMENTATION SHALL BE STORED IN THE DOCUMENTATION CABINET (NFPA 72, 7.7.2.3): PROVIDE NAMEPLATE "FIRE ALARM SYSTEM RECORD DOCUMENTS" (NFPA 72, 7.7.2.5).
16. FIRE ALARM MANUAL PULLSTATIONS SHALL BE INSTALLED IN ACCORDANCE WITH NFPA 72 17.14.5 AND SHALL MEET THE CALIFORNIA ACCESSIBILITY REQUIREMENTS OUTLINED IN THE CBC. ("CONTROLS AND OPERATING MECHANISMS SHALL BE OPERABLE WITH ONE HAND AND NOT REQUIRE TIGHT GRASPING, PINCHING OR TWISTING OF THE WRIST. THE FORCE TO ACTIVATE THE CONTROLS SHALL BE NO GREATER THAN 5 POUNDS OF FORCE". REFER TO DSA ACCESSIBILITY STAFF FOR QUESTIONS OR CLARIFICATION.)
17. CO DETECTION ALARM SHALL PROVIDE GENERAL STROBE ALARM BUT SHALL NOT DIAL OUT AS ALARM CONDITION, PROVIDE TEMPORAL SOUND FROM BASE AT LOCAL SITE OF CO DETECTION & TROUBLE NOTICE AT ANNUNCIATOR PANEL.

FIRE ALARM EQUIPMENT LIST

SYMBOL	DESCRIPTION	MANUFACTURER & MODEL NUMBER	CSFM LISTING NUMBER	STANDBY CURRENT	ALARM CURRENT
FACP	FIRE ALARM CONTROL PANEL	NOTIFIER NFS2-3030	7165-0028:0243	290mA	650mA
FAEP	FIRE ALARM EXPANDER PANEL	NOTIFIER ACPS-610 W/ CAB-PS1 CABINET	7135-0028:0248	150mA	90mA
FAVEP	DIGITAL AUDIO AMPLIFIER W/ REMOTE MICROPHONE AND FIBER MODULE	NOTIFIER DAA2-5025	7165-0028:0234	372mA	681mA
M	ADDRESSABLE MONITOR MODULE	NOTIFIER FMM-1	7300-0028:0219	0.36mA	6.5mA
C R	ADDRESSABLE CONTROL / RELAY MODULE	NOTIFIER FCM-1 / FRM-1	7300-0028:0219	0.36mA	6.5mA
S	ADDRESSABLE PHOTOELECTRIC SMOKE DETECTOR	NOTIFIER FSP-951	7272-0028:0206	0.36mA	6.5mA
H	ADDRESSABLE FIX TEMPERATURE HEAT DETECTOR (135F)	NOTIFIER FST-951	7270-0028:0196	0.36mA	6.5mA
CO	ADDRESSABLE MULTI-CRITERIA DETECTOR (135F)	NOTIFIER FPTI-951	7270-0028:0510	0.36mA	6.5mA
	DETECTOR BASE	NOTIFIER B300	7300-1635:0109	-	-
D	ADDRESSABLE PHOTO DUCT SMOKE DETECTOR HOUSING WITH SMOKE DETECTOR (FSP-951), RELAY (FRM-1), SAMPLING TUBE (DST__), WP ENCLOSURE (DH400OE-1), AND REMOTE KEY TEST SWITCH (RTS451KEY)	NOTIFIER DNRW	3240-1653:0209	0.36mA	6.5mA
S P	VISUAL STROBE, WALL MOUNT, SELECTABLE CANDELA UL 1971 PUBLIC MODE NOTIFICATION	SYSTEM SENSOR SRL	7125-1653:0504		
			15cd	0mA	43mA
			30cd	0mA	63mA
			75cd	0mA	107mA
			110cd	0mA	148mA
V c	COMBINATION VISUAL STROBE AND SPEAKER (1W TAP), WALL MOUNT, SELECTABLE CANDELA UL 1971 PUBLIC MODE NOTIFICATION	SYSTEM SENSOR SPSRL	7320-1653:0505		
			15cd	0mA	43mA
			30cd	0mA	63mA
			75cd	0mA	107mA
			110cd	0mA	148mA
S c	AUDIBLE SPEAKER (1W), WALL MOUNT	SYSTEM SENSOR SPRL	7320-1653:0505	-	-
WP V c	OUTDOOR RATED, COMBINATION VISUAL STROBE AND SPEAKER (1W TAP), WALL MOUNT, SELECTABLE CANDELA UL 1971 PUBLIC MODE NOTIFICATION	SYSTEM SENSOR SPRK	7320-1653:0201		
			15cd	0mA	66mA
			30cd	0mA	94mA
			75cd	0mA	158mA
			110cd	0mA	202mA
WP S c	OUTDOOR RATED, AUDIBLE SPEAKER (1W), WALL MOUNT	SYSTEM SENSOR SPRK	7320-1653:0201	-	-
	DOCUMENT CABINET (LOCATE BELOW/ADJACENT 'FACP')	SPACE AGE SRD ACE-11	7300-0553:0110	-	-

NOTICE TO CONTRACTORS:

THE SYSTEM DESIGN IS BASED ON THE PRODUCTS SHOWN ON THIS FIRE ALARM EQUIPMENT LIST AND HAS BEEN APPROVED BY DSA AS SUCH. DEVIATIONS FROM THE APPROVED DESIGN (FOR MANUFACTURER OR DEVICE LAYOUTS) MAY BE ALLOWED WITH THE APPROVAL BY THE ARCHITECT. HOWEVER, IT SHALL BE THE CONTRACTOR'S RESPONSIBILITY TO REDESIGN AND RESUBMIT THE PLANS TO DSA FOR RE-APPROVAL.

DETECTOR SUBSCRIPT LEGEND:

"c" - DETECTOR TO BE LOCATED WITHIN ACCESSIBLE CEILING SPACE
"p" - DETECTOR TO BE LOCATED WITHIN 36" OF CEILING PEAK

NOTIFICATION DEVICE REQUIREMENTS:

NOTIFICATION DEVICES SHALL NOT REFLECT THE WORD "FIRE" OF HAVE ANY FIRE SYMBOL THERON. THESE NOTIFICATION DEVICES ARE INTENDED FOR CO ALARM CONDITIONS, AS WELL AS FIRE ALARM SYSTEM CONDITIONS.

FIRE ALARM WIRING LEGEND

TAG	DESCRIPTION	CABLING
A	INITIATION CIRCUIT	(2) #16 TWISTED/UNSHIELDED - WESTPENN 990S (OR WESTPENN AQC225 (WET))
B	STROBE NOTIFICATION CIRCUIT(S)	(2) #12 THHN/THWN
C	SPEAKER NOTIFICATION CIRCUIT(S)	(2) #16 SHIELDED SPKR CABLE - WESTPENN 991 (OR WESTPENN AQC294 (WET))
D	24V AUX POWER CIRCUIT	(2) #14 TWISTED/UNSHIELDED - WESTPENN 994S (OR WESTPENN AQC226 (WET))
E	REMOTE AUDIO AMPLIFIER WIRING	(2) #18 TWISTED/SHIELDED - WESTPENN AQC293 (2) #18 TWISTED/UNSHIELDED - WESTPENN AQC225

NOTE:
CONTRACTOR SHALL VERIFY EXACT CABLE/WIRE TYPES WITH SYSTEM MANUFACTURER PRIOR TO ROUGH-IN. INSTALL WIRING IN 3/4" CONDUIT MIN.

FIRE ALARM SYSTEM DESCRIPTION

1. THE FIRE ALARM SYSTEM SHALL BE AN AUTOMATIC ADDRESSABLE SYSTEM WITH STYLE 4, CLASS B WIRING FOR IDC'S, NAC'S, AND SLC'S WITH EMERGENCY VOICE / ALARM COMMUNICATIONS.
2. PROVIDE COMPLETE PROGRAMMING, AND ALL NECESSARY DEVICES FOR COMPLETE SYSTEM.
3. CIRCUIT PATHWAY SURVIVABILITY SHALL BE LEVEL 1.
4. PROVIDE AND INSTALL NEW EQUIPMENT, DEVICES AND REQUIRED MODULES AND PROVIDE CONNECTIONS COMPLETE FOR A FULLY FUNCTIONING EXPANSION OF THE EXISTING FIRE ALARM SYSTEM.
5. THE NAME OF THE SPECIFIC PERSON RESPONSIBLE FOR THE SYSTEM DESIGN IS JUSTIN KIRK (O'MAHONY & MYER).
6. SYSTEM INSTALLATION SHALL BE BY A LICENSED ELECTRICAL OR FIRE ALARM CONTRACTOR WITH A CALIFORNIA C-10 LICENSE, REGULARLY ENGAGED IN THE INSTALLATION AND COMMISSIONING OF FIRE ALARM SYSTEMS TO NFPA 72 STANDARDS. INSTALLING CONTRACTOR'S NAME AND CONTACT INFORMATION SHALL BE LISTED IN THE NFPA CLOSE OUT DOCUMENTATION AT COMPLETION OF PROJECT.

FIRE ALARM SCOPE OF WORK

1. PROVIDE A NEW NETWORKED FIRE ALARM CONTROL PANEL AND AUDIO AMPLIFIER PANEL AT THE NEW BUILDING(S). REPROGRAM EXISTING FACP TO SUPPORT THE (N) DEVICES, FULLY NETWORKED TO THE (E) NOTIFIER FIRE ALARM NETWORK ALREADY ACTIVE AT THE CAMPUS.
2. REPROGRAM THE (E) FIRE ALARM NETWORK TO ACCOMMODATE THE (N) PANEL AND EQUIPMENT / DEVICES, TO ALLOW FULL ANNUNCIATION OF ALL (N) EQUIPMENT AT THE (E) MAIN CAMPUS FACP, (E) MAIN CAMPUS ANNUNCIATOR, AND (E) OFF-SITE MONITORING.
3. TERMINATE EACH NOTIFICATION CIRCUIT TO THE (N) FACP AND/OR FAEP AS SHOWN ON PLANS AND RISER DIAGRAMS.
4. TERMINATE THE INITIATION CIRCUITS TO THE FACP AS SHOWN ON PLANS AND RISER DIAGRAMS.
5. TERMINATE THE AUDIO SPEAKER CIRCUITS TO THE FACP / AMPLIFIER AS SHOWN ON PLANS AND RISER DIAGRAMS.

AGENCY APPROVAL STAMP:

IDENTIFICATION STAMP
DIV. OF THE STATE ARCHITECT
APP: 01-120890 INC:
REVIEWED FOR
SS ☑ FLS ☑ ACS ☑
DATE: 10/25/2023

TLCDARCHITECTURE
520 Third St. #250
Santa Rosa, CA 95401
o: 707.525.5600
f: 707.525.5616
tlcd.com

CONSULTANT:

O'MAHONY & MYER
ELECTRICAL ENGINEERING & LIGHTING DESIGN
4340 REDWOOD HWY., SUITE 245
SAN RAFAEL, CALIFORNIA 94903
(415) 492-0420/FAX (415) 479-9662

STAMP:

REGISTERED PROFESSIONAL ENGINEER
PETER A. COLENBRANDER
No.E14738
Exp. 6/25
ELECTRICAL
STATE OF CALIFORNIA

REVISIONS:

Number	Date	Description

NAPA VALLEY COLLEGE WINE EDUCATION CENTER
2277 NAPA VALLEJO HWY
NAPA, CA 94558

NAPA VALLEY COLLEGE

DSA APPLICATION NUMBER:
01-120890

TLCD PROJECT NUMBER:
21062.00

DATE:
AUGUST 30, 2023

FIRE ALARM EQUIPMENT LIST, GENERAL NOTES & DETAILS

FE-001

© THESE DRAWINGS ARE INSTRUMENTS OF SERVICE AND ARE THE SOLE PROPERTY OF TLCD ARCHITECTURE. ANY USE WITHOUT WRITTEN CONSENT IS PROHIBITED.

30 x 42"
10/17/2023 1:08:14 PM

NAPA VALLEY COLLEGE WINE EDUCATION CENTER - 222020 R23

NUMBERED SHEET NOTES

1. PROVIDE AND INSTALL 1-1/4" C. FOR FIRE ALARM FIBER OPTIC NETWORK CABLING HOMERUN TO CAMPUS FIRE ALARM NETWORK TERMINATION.
2. INTERCEPT AND EXTEND TO EXISTING PULLBOX.

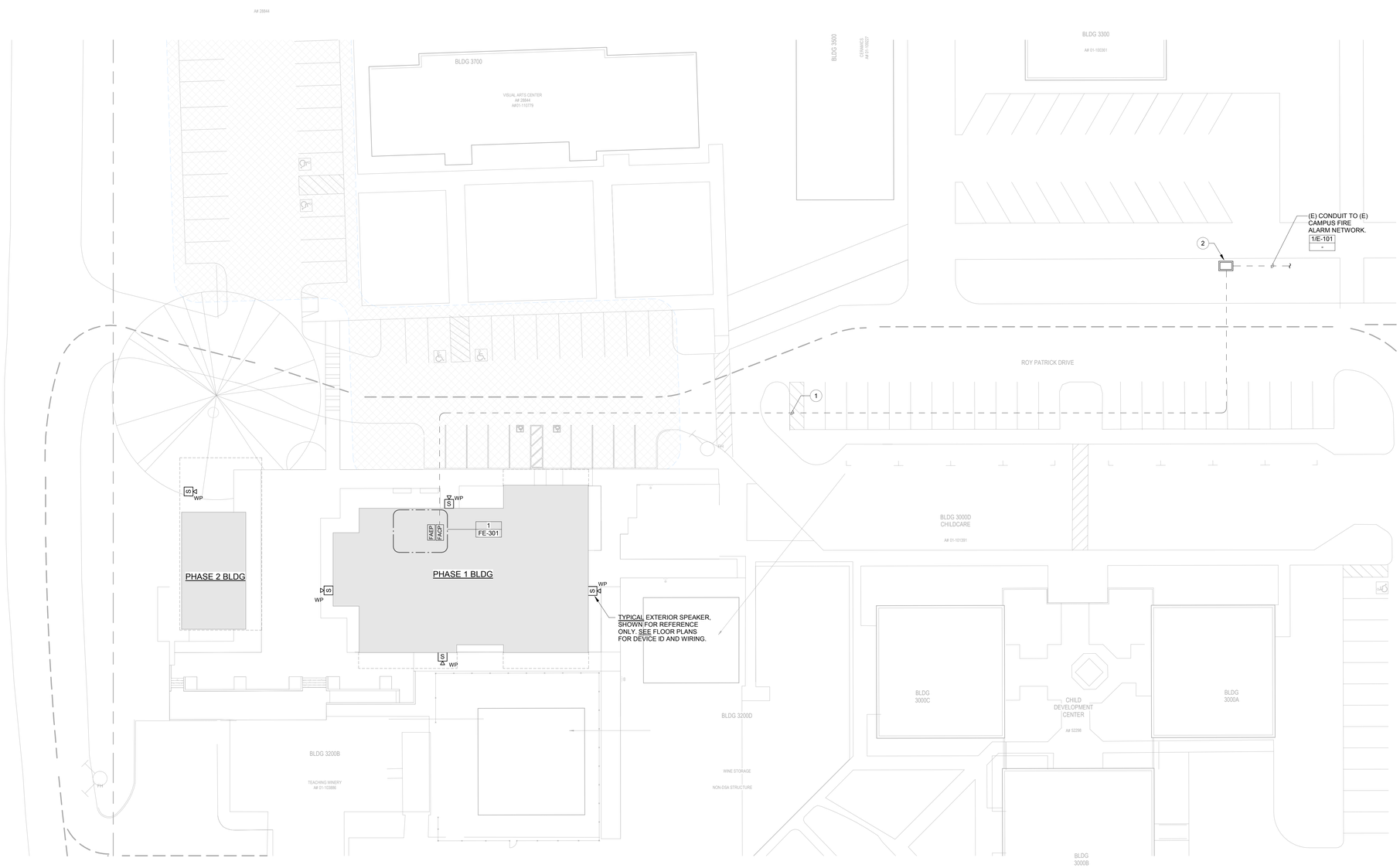

1 SITE PLAN - FIRE ALARM
1" = 20'-0"

AGENCY APPROVAL STAMP:

IDENTIFICATION STAMP
DIV. OF THE STATE ARCHITECT
APP: 01-120890 INC:
REVIEWED FOR
SS ☑ FLS ☑ ACS ☑
DATE: 10/25/2023

TLCDARCHITECTURE
520 Third St. #250
Santa Rosa, CA 95401
o: 707.525.5600
f: 707.525.5616
tlcd.com

CONSULTANT:

O'MAHONY & MYER
ELECTRICAL ENGINEERING & LIGHTING DESIGN
4340 REDWOOD HWY., SUITE 245
SAN RAFAEL, CALIFORNIA 94903
(415) 492-0420/FAX (415) 479-9662

STAMP:

REGISTERED PROFESSIONAL ENGINEER
PETER J. COLEMAN JAMES
No.E14738
Exp. 6/25
ELECTRICAL
STATE OF CALIFORNIA

REVISIONS:

Number	Date	Description

NAPA VALLEY COLLEGE WINE EDUCATION CENTER

2277 NAPA VALLEJO HWY
NAPA, CA 94558

NAPA VALLEY COLLEGE

DSA APPLICATION NUMBER:
01-120890

TLCD PROJECT NUMBER:
21062.00

DATE:
AUGUST 30, 2023

SITE PLAN - FIRE ALARM

FE-101

© THESE DRAWINGS ARE INSTRUMENTS OF SERVICE AND ARE THE SOLE PROPERTY OF TLCD ARCHITECTURE. ANY USE WITHOUT WRITTEN CONSENT IS PROHIBITED.

30 X 42"
10/17/2023 1:08:17 PM

NAPA VALLEY COLLEGE WINE EDUCATION CENTER - 222020 R23

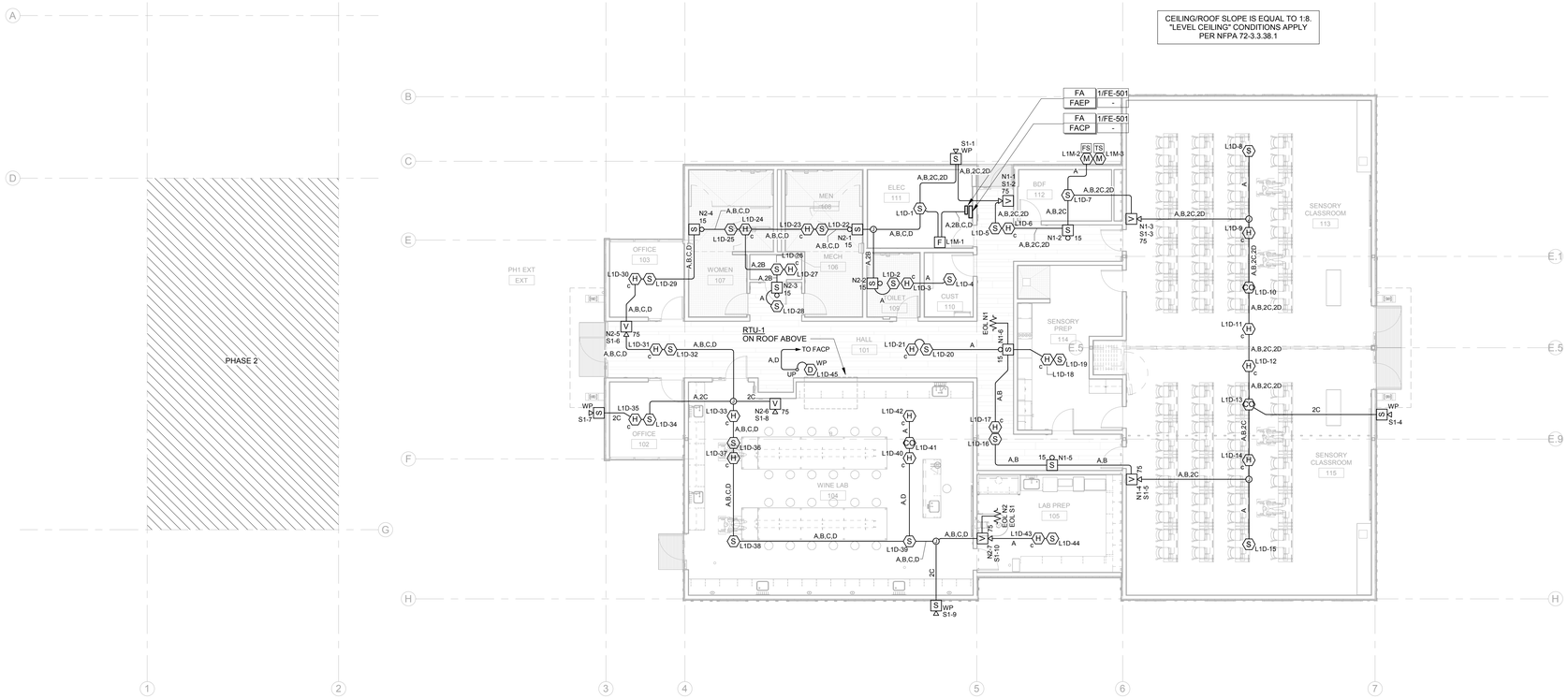

1 FLOOR PLAN FIRE ALARM - PHASE 1
1/8" = 1'-0"

30 x 42"
10/17/2023 1:08:28 PM

AGENCY APPROVAL STAMP:

IDENTIFICATION STAMP
DIV. OF THE STATE ARCHITECT
APP: 01-120890 INC:
REVIEWED FOR
SS ☑ FLS ☑ ACS ☑
DATE: 10/25/2023

TLCDARCHITECTURE
520 Third St. #250
Santa Rosa, CA 95401
o: 707.525.5600
f: 707.525.5616
tlcd.com

CONSULTANT:

O'MAHONY & MYER
ELECTRICAL ENGINEERING & LIGHTING DESIGN
4340 REDWOOD HWY., SUITE 245
SAN RAFAEL, CALIFORNIA 94903
(415) 492-0420/FAX (415) 479-9662

STAMP:

REGISTERED PROFESSIONAL ENGINEER
PETER J. COLENBRANDER
No.E14738
Exp. 6/25
ELECTRICAL
STATE OF CALIFORNIA

REVISIONS:

Number	Date	Description

NAPA VALLEY COLLEGE WINE EDUCATION CENTER

2277 NAPA VALLEJO HWY
NAPA, CA 94558

NAPA VALLEY COLLEGE

DSA APPLICATION NUMBER:
01-120890

TLCD PROJECT NUMBER:
21062.00

DATE:
AUGUST 30, 2023

© THESE DRAWINGS ARE INSTRUMENTS OF SERVICE AND ARE THE SOLE PROPERTY OF TLCD ARCHITECTURE. ANY USE WITHOUT WRITTEN CONSENT IS PROHIBITED.

FLOOR PLAN FIRE ALARM - PHASE 1

FE-301

NAPA VALLEY COLLEGE WINE EDUCATION CENTER - 222020 R23

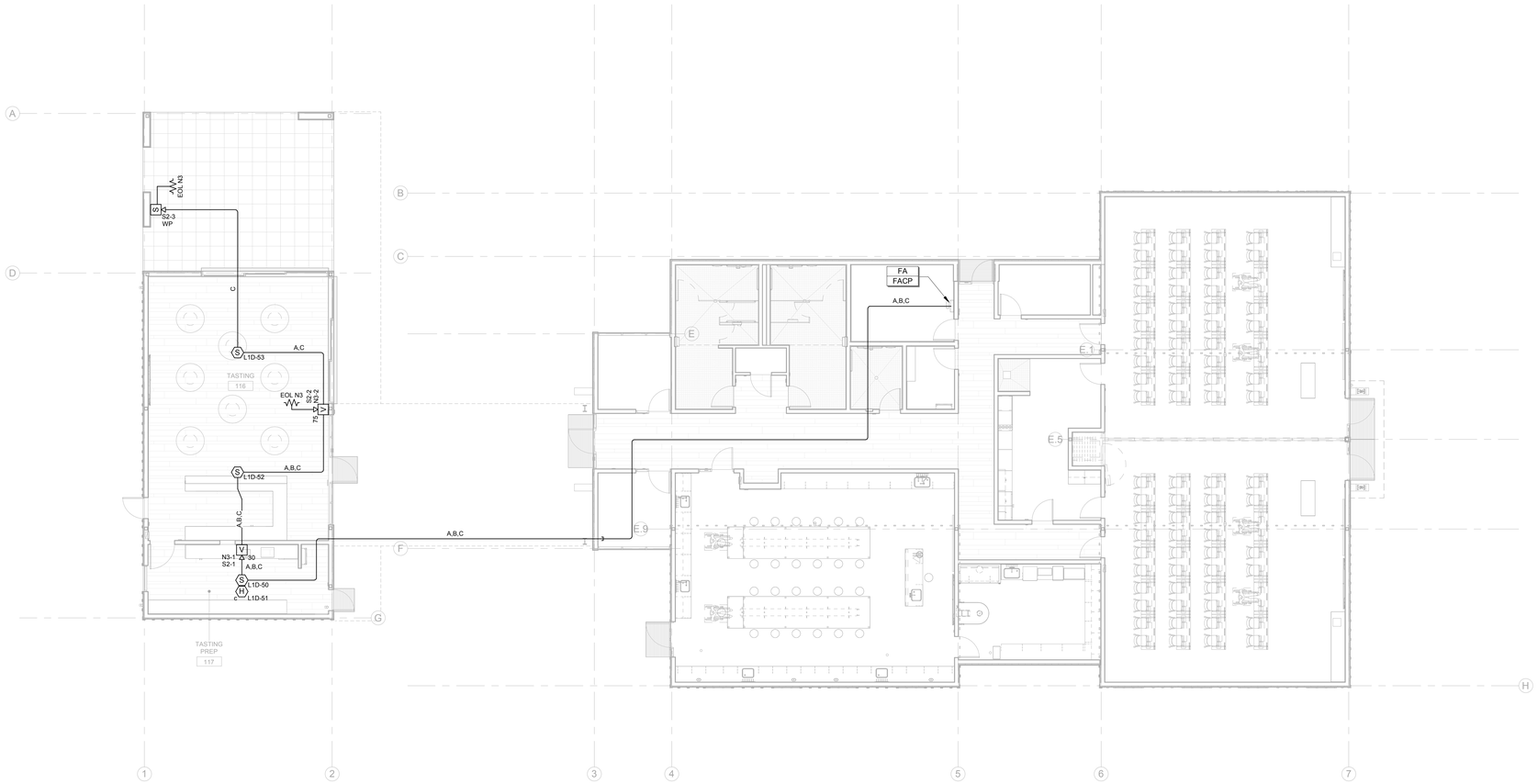

1 FLOOR PLAN FIRE ALARM - PHASE 2
1/8" = 1'-0"

30 x 42"
10/17/2023 1:06:29 PM

AGENCY APPROVAL STAMP:

IDENTIFICATION STAMP
DIV. OF THE STATE ARCHITECT
APP: 01-120890 INC:
REVIEWED FOR
SS ☑ FLS ☑ ACS ☑
DATE: 10/25/2023

TLCDARCHITECTURE
520 Third St. #250
Santa Rosa, CA 95401
o: 707.525.5600
f: 707.525.5616
tlcd.com

CONSULTANT:

O'MAHONY & MYER
ELECTRICAL ENGINEERING & LIGHTING DESIGN
4340 REDWOOD HWY., SUITE 245
SAN RAFAEL, CALIFORNIA 94903
(415) 492-0420/FAX (415) 479-9662

STAMP:

REGISTERED PROFESSIONAL ENGINEER
PETER A. COLENBRANDER
No.E14738
Exp. 6/25
ELECTRICAL
STATE OF CALIFORNIA

REVISIONS:

Number	Date	Description

NAPA VALLEY COLLEGE WINE EDUCATION CENTER

2277 NAPA VALLEJO HWY
NAPA, CA 94558

NAPA VALLEY COLLEGE

DSA APPLICATION NUMBER:
01-120890

TLCD PROJECT NUMBER:
21062.00

DATE:
AUGUST 30, 2023

FLOOR PLAN FIRE ALARM - PHASE 2

FE-302

© THESE DRAWINGS ARE INSTRUMENTS OF SERVICE AND ARE THE SOLE PROPERTY OF TLCD ARCHITECTURE. ANY USE WITHOUT WRITTEN CONSENT IS PROHIBITED.

NAPA VALLEY COLLEGE WINE EDUCATION CENTER - 222020 R23

VOLTAGE DROP CALCULATIONS: FAEP

SIGNAL CIRCUIT ID:	N1																		
TOTAL CKT CURRENT =	0.478 A																		
MAX VOLT-DROP =	0.84%																		
SYSTEM VOLTAGE =	20.4																		
Distance to Device (Ft)->	5	38	21	19	46	22	32												5
Device Address->	SYNC	N1-1	N1-2	N1-3	N1-4	N1-5	N1-6												EOL
Candella Rating->		75	15	75	75	15	15												
Current of Device (Amp)->	0.028	0.107	0.043	0.107	0.107	0.043	0.043												
Size of Wire (AWG)->	#12	#12	#12	#12	#12	#12	#12	#12	#12	#12	#12	#12	#12	#12	#12	#12	#12	#12	#12
Current Total (Amp)->	0.478	0.450	0.343	0.300	0.193	0.086	0.043	0.000	0.000	0.000	0.000	0.000	0.000	0.000	0.000	0.000	0.000	0.000	0.000
Device Volt-drop->	0.05%	0.37%	0.51%	0.61%	0.78%	0.82%	0.84%	0.84%	0.84%	0.84%	0.84%	0.84%	0.84%	0.84%	0.84%	0.84%	0.84%	0.84%	0.84%
Device Volt->	20.39	20.32	20.30	20.27	20.24	20.23	20.23	20.23	20.23	20.23	20.23	20.23	20.23	20.23	20.23	20.23	20.23	20.23	20.23

SIGNAL CIRCUIT ID:	N2																		
TOTAL CKT CURRENT =	0.521 A																		
MAX VOLT-DROP =	1.25%																		
SYSTEM VOLTAGE =	20.4																		
Distance to Device (Ft)->	5	20	18	23	30	32	41	58											5
Device Address->	SYNC	N2-1	N2-2	N2-3	N2-4	N2-5	N2-6	N2-7											EOL
Candella Rating->		15	15	15	15	75	75	75											
Current of Device (Amp)->	0.028	0.043	0.043	0.043	0.043	0.107	0.107	0.107											
Size of Wire (AWG)->	#12	#12	#12	#12	#12	#12	#12	#12	#12	#12	#12	#12	#12	#12	#12	#12	#12	#12	#12
Current Total (Amp)->	0.521	0.493	0.450	0.407	0.364	0.321	0.214	0.107	0.000	0.000	0.000	0.000	0.000	0.000	0.000	0.000	0.000	0.000	0.000
Device Volt-drop->	0.05%	0.24%	0.39%	0.57%	0.77%	0.97%	1.13%	1.25%	1.25%	1.25%	1.25%	1.25%	1.25%	1.25%	1.25%	1.25%	1.25%	1.25%	1.25%
Device Volt->	20.39	20.35	20.32	20.28	20.24	20.20	20.17	20.14	20.14	20.14	20.14	20.14	20.14	20.14	20.14	20.14	20.14	20.14	20.14

SIGNAL CIRCUIT ID:	N3																		
TOTAL CKT CURRENT =	0.198 A																		
MAX VOLT-DROP =	0.70%																		
SYSTEM VOLTAGE =	20.4																		
Distance to Device (Ft)->	5	185	42																5
Device Address->	SYNC	N3-1	N3-2																EOL
Candella Rating->		30	75																
Current of Device (Amp)->	0.028	0.063	0.107																
Size of Wire (AWG)->	#12	#12	#12	#12	#12	#12	#12	#12	#12	#12	#12	#12	#12	#12	#12	#12	#12	#12	#12
Current Total (Amp)->	0.198	0.170	0.107	0.000	0.000	0.000	0.000	0.000	0.000	0.000	0.000	0.000	0.000	0.000	0.000	0.000	0.000	0.000	0.000
Device Volt-drop->	0.02%	0.61%	0.70%	0.70%	0.70%	0.70%	0.70%	0.70%	0.70%	0.70%	0.70%	0.70%	0.70%	0.70%	0.70%	0.70%	0.70%	0.70%	0.70%
Device Volt->	20.40	20.27	20.26	20.26	20.26	20.26	20.26	20.26	20.26	20.26	20.26	20.26	20.26	20.26	20.26	20.26	20.26	20.26	20.26

BATTERY CALCULATIONS: FAEP

STANDBY MODE:

	EA (A)	QTY	CURRENT
FAEP CTRL UNIT:	0.075	1	0.075
TOTAL STANDBY CURRENT =			0.075 A
REQUIRED (24 HOURS) =			1.800 AH

ALARM MODE:

	EA (A)	QTY	CURRENT
CKT N1	0.478	1	0.478
CKT N2	0.521	1	0.521
CKT N3	0.198	1	0.198
CKT	0.069	1	0.069
FAEP CTRL UNIT:	0.175	1	0.175
TOTAL STANDBY CURRENT =			1.441 A
REQUIRED (15 MINUTES) =			0.360 AH

TOTAL BATTERY POWER REQUIRED AT 120% = 2.592

PROVIDE TWO, 12V, 7AH BATTERIES

VOLTAGE DROP FORMULAS:

2L x I x R = **Vd**

Vd / VDC = Vd%

Vd = Max Voltage Drop (Volts DC)
L = Circuit length, one-way (ft)
I = Current (amps)
R = Resistance (ohms/1000ft)
VDC = System Battery Voltage (Volts)

CONDUCTOR RESISTANCE:

AWG		Ohms/1000ft (R)
#10	=	1.21
#12	=	1.93

NOTE: WHERE DEVICE TERMINALS ARE LISTED AT MAXIMUM #12AWG, PROVIDE WIRE NUT CONNECTION AT SPECIFIED WIRE SIZE, WITH #12 PIGTAIL CONNECTION TO TERMINALS.

1

BATTERY CALCULATIONS: FACP (NFS2-3030)

STANDBY MODE

	EA (A)	QTY.	CURRENT
CONTROL UNIT	0.1500	1	0.150
ADDRESSABLE DEVICES	0.0004	49	0.020
ADDRESSABLE MODULES	0.0004	2	0.001
PRIMARY AMPLIFIER	0.3720	1	0.372
SECONDARY AMPLIFIER	0.3720	1	0.372
REMOTE ANNUNCIATOR	0.1200	1	0.120
REMOTE MICROPHONE	0.1200	1	0.120

TOTAL STANDBY CURRENT = 1.154 A
REQUIRED (24 HOURS) = 27.705 AH

ALARM MODE

	EA (A)	QTY.	CURRENT
CONTROL UNIT	0.2750	1	0.275
ADDRESSABLE DEVICES	0.0065	49	0.319
ADDRESSABLE MODULES	0.0065	2	0.013
PRIMARY AMPLIFIER	0.6810	1	0.681
SECONDARY AMPLIFIER	0.6810	1	0.681
REMOTE ANNUNCIATOR	0.4000	1	0.400
REMOTE MICROPHONE	0.4000	1	0.400

TOTAL ALARM CURRENT = 2.769 A
REQUIRED (15 MIN) = 0.692 AH

TOTAL POWER REQUIRED WITH 120%
BATTERY DERATING FACTOR = 34.076 AH

PROVIDE TWO 12V, 12AH 60AH BATTERIES

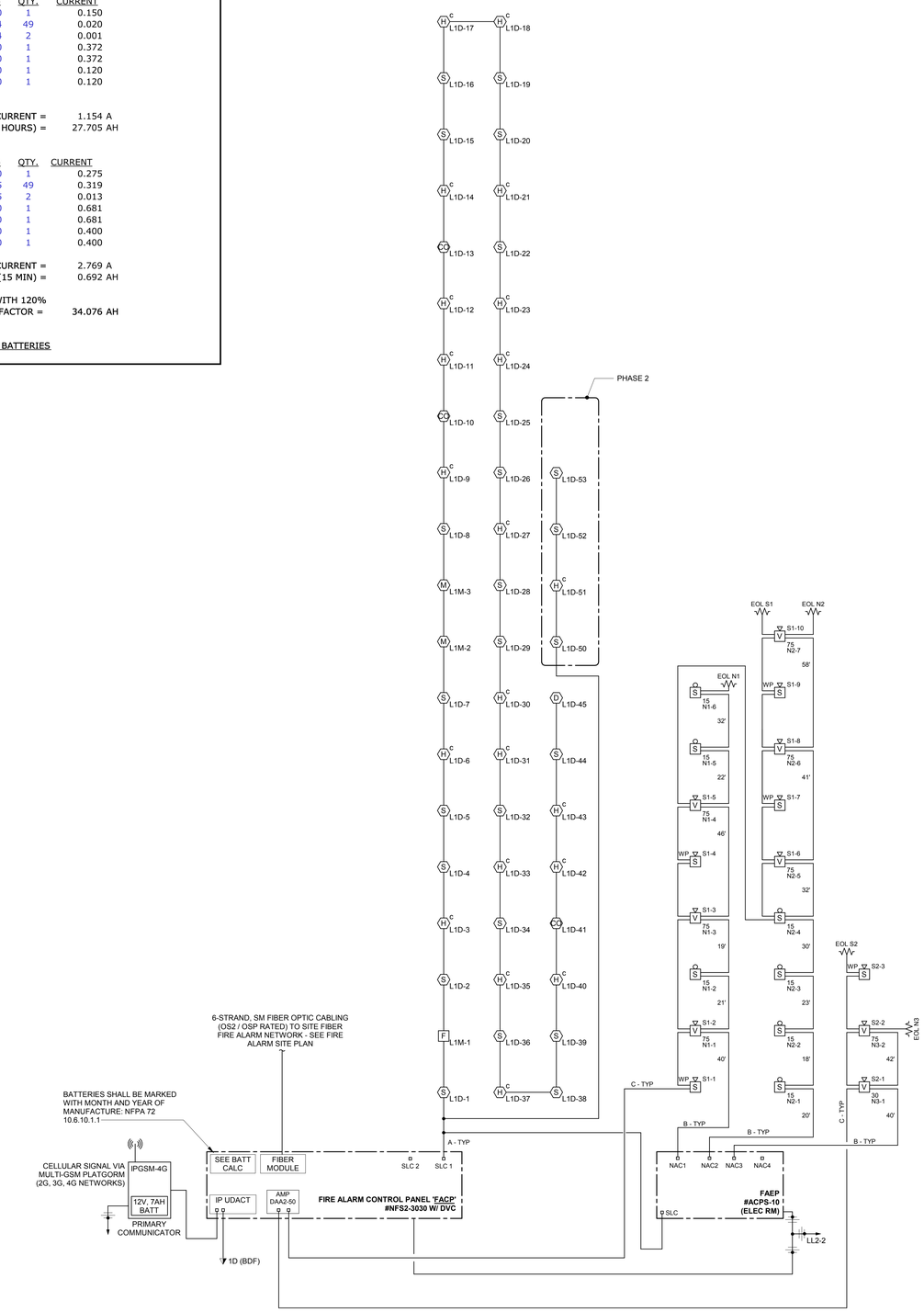

1 FIRE ALARM RISER DIAGRAM
NO SCALE

30 x 42"
10/17/2023 1:08:37 PM

AGENCY APPROVAL STAMP:

IDENTIFICATION STAMP
DIV. OF THE STATE ARCHITECT
APP: 01-120890 INC:
REVIEWED FOR
SS ☑ FLS ☑ ACS ☑
DATE: 10/25/2023

TLCDARCHITECTURE
520 Third St. #250
Santa Rosa, CA 95401
o: 707.525.5600
f: 707.525.5616
tlcd.com

CONSULTANT:

O'MAHONY & MYER
ELECTRICAL ENGINEERING & LIGHTING DESIGN
4340 REDWOOD HWY., SUITE 245
SAN RAFAEL, CALIFORNIA 94903
(415) 492-0420/FAX (415) 479-9662

STAMP:

REGISTERED PROFESSIONAL ENGINEER
PETER A. COLENBRANDER
No.E14738
Exp. 6/25
ELECTRICAL
STATE OF CALIFORNIA

REVISIONS:

Number	Date	Description

NAPA VALLEY COLLEGE WINE EDUCATION CENTER

2277 NAPA VALLEJO HWY
NAPA, CA 94558

NAPA VALLEY COLLEGE

DSA APPLICATION NUMBER:
01-120890

TLCD PROJECT NUMBER:
21062.00

DATE:
AUGUST 30, 2023

RISER DIAGRAM - FIRE ALARM

FE-501

© THESE DRAWINGS ARE INSTRUMENTS OF SERVICE AND ARE THE SOLE PROPERTY OF TLCD ARCHITECTURE. ANY USE WITHOUT WRITTEN CONSENT IS PROHIBITED.

SYMBOL LEGEND

SYMBOL	ABBREVIATION	DESCRIPTION
		UPRIGHT SPRINKLER ON 1/2" OUTLET
		UPRIGHT SPRINKLER ON 1" SPRIG
		PENDENT SPRINKLER ON 1" DROP LOCATED AT FINISHED CEILINGS
		UPRIGHT SPRINKLER W/ PENDENT ON 1" DROP BELOW
		QR SIDEWALL SPRINKLER
		SPRINKLER BRANCHLINE
		SPRINKLER MAIN
		CHANGE IN PIPE ELEVATION
		HANGER LOCATION
		END OF LINE / BRANCHLINE RESTRAINT
12		HYDRAULIC REFERENCE POINT
		GROOVED COUPLING
		GROOVED CAP
		THREADED CAP
		2 WAY/4 WAY EARTHQUAKE BRACE
		SYSTEM RISER
	A/S	AUTOMATIC SPRINKLERS
	AFF	ABOVE FINISHED FLOOR
	AFG	ABOVE FINISHED GRADE
	ASR	AUTOMATIC SPRINKLER RISER
	ATR	ALL THREAD ROD
	BFG	BELOW FINISHED GRADE
	BJ	BELOW JOIST
	BOR	BASE OF RISER
	DCV	DETECTOR CHECK VALVE
	DN	DOWN ELEV ELEVATION
	DWG	DRAWING
	FDC CONNECTION	FIRE DEPARTMENT
	FS	FLOW SWITCH
	MRA	MOST REMOTE AREA
	NPT	NATIONAL PIPE THREAD
	NTS	NOT TO SCALE
	POC	POINT OF CONNECTION
	RC	REDUCING COUPLING
	SAD	SEE ARCHITECTURAL DRAWINGS
	SCD	SEE CIVIL DRAWINGS
	SSD	SE STRUCTUAL DRAWINGS
	SSP	STANDARD SPRAY PENDENT
	SSU	STANDARD SPRAY UPRIGHT
	TYP	TYPICAL
	TOR	TOP OF RISER
	UON	UNLESS OTHERWISE NOTED

SPRINKLER GENERAL NOTES

1. THE SYSTEM DESIGN AND INSTALLATION SHALL COMPLY WITH THE 2022 EDITION OF NFPA13 AS WELL AS DSA, AND LOCAL JURISDICTIONAL REQUIREMENTS.
2. SYSTEM DESIGN IS FOR A WET PIPE SYSTEM WITH THE FOLLOWING HYDRAULIC REQUIREMENTS:
   CLASSROOMS, LOBBIES, OFFICES, RESTROOMS, ETC - LIGHT HAZARD OCCUPANCY:
   AREA REDUCTION APPLIED PER 19.2.3.2.3.1 AND 19.2.3.2.3.3.
   HMDA AREA 1 - 1178 SQ. FT FLOWING 217.4 GPM PLUS 100 GPM HOSE ALLOWANCE.
   HMDA AREA 2 - 1149 SQ. FT FLOWING 158.8 GPM PLUS 100 GPM HOSE ALLOWANCE.

   PLACARDS CONTAINING THE SYSTEM HYDRAULIC REQUIREMENTS WILL BE MOUNTED AT THE SYSTEM RISER.
3. CITY WATER SUPPLY INFORMATION (CALCULATED FEBRUARY 3, 2022):
   FIRE FLOW REPORT PREPARED BY CITY OF NAPA WATER DIVISION
   LOCATION: 2277 NAPA VALLEJO HIGHWAY
   WATER MAIN SIZE: 8 INCHES
   HYDRANT ELEVATION: 24 FEET
   STATIC PRESSURE: 94 PSI
   MAXIMUM FLOW: 1,550 GPM AT 48 PSI RESIDUAL PRESSURE
4. ALL FIRE PROTECTION EQUIPMENT, PIPING, VALVES, FITTINGS AND ACCESSORIES, ETC., SHALL BE RATED FOR A MINIMUM WORKING PRESSURE OF 175 POUNDS PER SQUARE INCH.
5. ALL PIPE WELDING SHALL BE IN COMPLIANCE WITH THE REQUIREMENTS OF AWS D10.9 (STANDARD FOR BUILDING SERVICE PIPING), LEVEL AR-3.
6. ALL PIPING SHALL BE EARTHQUAKE BRACED AS OUTLINED IN NFPA 13 SECTION 18.
7. ALL HANGER COMPONENTS AND INSTALLATION SHALL BE IN ACCORDANCE WITH NFPA 13 SECTIONS 17.1, 17.2, AND 17.4.
8. PER NFPA 13 SEC. 6.10.2.2 ALL INTERIOR PIPING AND APPURTENANCES SUBJECTED TO SYSTEM WORKING PRESSURE SHALL BE HYDROSTATICALLY TESTED AT 200 PSI OR 50 PSI IN EXCESS OF MAXIMUM WORKING PRESSURE, WHICHEVER IS GREATER, AND SHALL MAINTAIN THAT PRESSURE WITHOUT LOSS FOR 2 HOURS. WITNESSED BY THE INSPECTOR OF RECORD, LOCAL FIRE DEPARTMENT SHALL BE NOTIFIED OF DATE AND TESTING SO THAT THEY MAY OBSERVE TESTING.
9. FLOW AND TAMPER SWITCHES WILL BE PROVIDED, HOWEVER, ALL ELECTRICAL WIRING IS BY OTHERS. ALL DEVICES SHALL BE COMPATIBLE WITH THE NEW FIRE ALARM SYSTEM.
10. ELECTRICAL WIRING AND ANY PAINTING OF THE PIPE THAT MAY BE REQUIRED SHALL BE BY OTHERS.
11. THE FIRE PROTECTION PIPING HANGER SYSTEM SHALL BE FM APPROVED AND UL LISTED.
12. PER NFPA 24 SECTION 10.10.2 UNDERGROUND MAINS AND LEAD-IN CONNECTIONS TO SYSTEM RISERS SHALL BE COMPLETELY FLUSHED BEFORE CONNECTION IS MADE TO OVERHEAD PIPING SYSTEMS (WITNESS BY THE LOCAL FIRE DEPARTMENT).
13. PER NFPA 13 SECTION 18.4 CLEARANCE SHALL BE PROVIDED AROUND ALL PIPING EXTENDING THROUGH WALLS, PLATFORMS, AND FOUNDATIONS, INCLUDING DRAINS SUCH THAT THE DIAMETER OF HOLES IS TWO INCHES LARGER THAN THE PIPE FOR 1" TO 3-1/2" NOMINAL AND FOUR INCHES LARGER THAN THE PIPE FOR 4" NOMINAL AND LARGER.
14. CONCEALED SPACES ABOVE CEILINGS HAVE LIMITED ACCESS AND DO NOT PERMIT OCCUPANCY OR STORAGE AND 2x JOISTS SPACES SHALL BE FILLED WITH BATT INSULATION WITH THE BOTTOM OF JOIST COVERED WITH LIMITED-COMBUSTIBLE MATERIAL. THEREFORE, PER NFPA 13 SECTIONS 9.2.1.2, 9.2.1.19 & 9.2.1.19.1 SPRINKLERS MAY BE OMITTED FROM CONCEALED SPACES ABOVE CEILINGS.
15. PER NFPA 13 SECTION 16.2.7 PROVIDE A SPARE SPRINKLER HEAD CABINET, SPRINKLER WRENCH, AND NO FEWER THAN A TOTAL OF 6 SPARE SPRINKLER HEADS MATCHING THE TYPE AND TEMPERATURE RATINGS FOR SYSTEMS LESS THAN 300 SPRINKLERS AND 12 SPARE SPRINKLER HEADS FOR SYSTEMS 300 TO 1000 SPRINKLERS.
16. PER NFPA 13 SECTION 18.6. PROVIDE RESTRAINT AT THE END SPRINKLER ON ALL BRANCHLINES AND ON ALL BRANCHLINES AT INTERVALS NOT EXCEEDING 27" IN LENGTH. BRANCHLINES SHALL BE RESTRAINED AGAINST EXCESSIVE VERTICAL AND LATERAL MOVEMENT BY USE OF A WRAP AROUND U-HOOK OR WIRE RESTRAINT.
17. PER NFPA 72 SECTION 17.13.2 SPRINKLER FLOW SWITCHES SHALL BE TESTED TO CONFIRM THAT WHEN THE INSPECTORS TEST VALVE IS ACTIVATED AN ALARM WILL SOUND WITHIN 90 SECONDS WHEN FLOW OCCURS THAT IS EQUAL TO OR GREATER THAN THAT FROM A SINGLE SPRINKLER OF THE SMALLEST ORIFICE SIZE INSTALLED IN THE SYSTEM. FINAL TESTING SHALL BE WITNESSED BY INSPECTOR OF RECORD.
19. PER NFPA 13 SECTION 29.1 SPRINKLER CONTRACTOR (C16) SHALL COMPLETE AND SIGN CONTRACTORS MATERIALS AND TEST CERTIFICATE FOR THE ABOVEGROUND PIPING USING NFPA 13 FORM IN FIGURE A.29.1.

PROJECT NOTES

1. THE AUTOMATIC WET PIPE SPRINKLER SYSTEMS SHALL CONFORM TO THE REQUIREMENTS OF THE 2022 EDITION OF NFPA PAMPHLET #13.
2. A MINIMUM OF 48 HOURS NOTICE SHALL BE REQUIRED FOR ANY INSPECTION AND/OR TESTING.
4. ANY DISCREPANCIES BETWEEN THE DRAWINGS AND THE CODE OR RECOGNIZED SPRINKLER STANDARDS SHALL BE BROUGHT TO THE ATTENTION OF THE INSPECTOR OF RECORD.
5. SEE "SEISMIC BRACING" DETAILS AND CALCULATIONS FOR INSTALLATION INFORMATION FOR EACH BRACE TYPE. BRACING IS PER 'TOLCO' OPA-0300 PRE-APPROVAL.
6. UNDERGROUND SITE FIRE PROTECTION PIPING IS TO BE DESIGNED AND INSTALLED BY OTHERS, AND IS SHOWN FOR REFERENCE ONLY. SEE CIVIL UTILITY DRAWINGS FOR DETAILS, NOTES, AND LEGENDS.
7. THE FIRE SPRINKLER SYSTEMS HAVE BEEN HYDRAULICALLY CALCULATED.
8. METHODS AND PROCEDURES FOR SHOP WELDING OF OUTLETS SHALL COMPLY WITH AWS B2.1.
9. THE INSTALLING FIRE SPRINKLER CONTRACTOR SHALL VERIFY / COORDINATE, AT NO ADDITIONAL COST TO THE OWNER, THE LOCATION OF SPRINKLERS, PIPING, AND DEVICES PRIOR TO FABRICATION AND INSTALLATION OF THE FIRE SPRINKLER SYSTEM.

PIPE MATERIAL SCHEDULE

SPRINKLER PIPING 6" & SMALLER:
PIPING 2" AND SMALLER SHALL BE SCHEDULE 40 STEEL ANSI/ASTM A53 OR EQUAL WITH CAST OR DUCTILE IRON THREADED FITTINGS.
PIPING LARGER THAN 2" SHALL BE SCHEDULE 10 STEEL ANSI/ASTM A53 OR EQUAL WITH THREADED OR GROOVED FITTINGS.
THREADED FITTINGS SHALL BE CLASS 125 CAST IRON MEETING ANSI B16.4 OR CLASS 150 MALLEABLE IRON MEETING ANSI B16.4. ALL THREADED PIPE AND FITTINGS SHALL HAVE THREADS CUT TO ANSI/ASME STANDARD B1.20.1.
GROOVED FITTINGS SHALL BE FM APPROVED. GROOVED FITTINGS SHALL BE MANUFACTURED OF CAST DUCTILE IRON CONFORMING TO ASTM A 536 OR FABRICATED CARBON STEEL CONFORMING TO ASTM A53.

SPRINKLER SCHEDULE

SYM	ABBREV	MFR	SIN - MODEL	TEMP	K	NPT	ORIF	FINISH	QTY
● ◉	SSP	VIKING	VK302 - MICROFAST QUICK RESPONSE PENDENT	155°F	5.6	1/2"	1/2"	CHROME	127
○ ◉	SSU	VIKING	VK300 - MICROFAST QUICK RESPONSE UPRIGHT	155°F	5.6	1/2"	1/2"	CHROME	4

Item	Make / Model	Description/ Accessories	Notes/ Features	Power		
				VOLTS	PHASE	AMPS
HEAT TRACE CONTROLLER AND HEAT TRACE CABLE	Chromalox Intellitrace ITC-FS Controller with Chromalox CPR3-1CR self-regulating heat trace cable	UL Listed wall mounted electronic controller with NEMA 4X enclosure, 3W per foot 16 AWG nickel-plated copper self regulating heating cable with polyolefin flame retardant jacket, (2)Chromalox RTES End Seal Kit, (2)RTBC-FS Line sensing thermostat fire sprinkler connection kit, LN-10 Line Sensing Heat Trace RTD Extension wire, AS-BM Ambient Sensing Heat Trace RTD	Provide 1/2" insulation and caution labels on all heat traced pipe. Set controller to maintain 40 F. Fully fault test cables per manufactures instructions and correct any issues.	120 V	1 P	30 A

GENERAL INFORMATION SIGN

SPRINKLER SYSTEM - GENERAL INFORMATION
for
NAPA VALLEY COLLEGE WINE EDUCATION CENTER
2277 NAPA VALLEJO HWY, NAPA, CA 94558
WET PIPE SYSTEM FOR LIGHT HAZARD OCCUPANCY

Pipe schedule system ❑ Yes ☒ No
High-piled storage ❑ Yes ☒ No
Rack storage: ❑ Yes ☒ No
Commodity class: _____
Max. storage height _____ ft m
Aisle width (min.) _____ ft m
Encapsulation ❑ Yes ☒ No
Solid shelving: ❑ Yes ☒ No
Flammable/ combustible liquids: ❑ Yes ☒ No
Other storage: ❑ Yes ☒ No

Hazardous materials: ❑ Yes ☒ No
Idle pallets: ❑ Yes ☒ No
Antifreeze systems ❑ Yes ☒ No
Location: _____
Dry or aux systems ☒ Yes ❑ No
Location: HEAT TRACE IN CANOPIES

Date: 02/28/2023
Flow test data:
Static: 94 PSI
Resid: 48 PSI
Flow: 1,550 GPM
Pitot: _____ psi bar
Date: 02/28/2023
Location: EXISTING FIRE HYDRANT #1
2277 NAPA VALLEJO HWY

Location of aux/low point drains:

Dry pipe/double interlock preaction valve test results
Original main drain test results:
Static: _____ psi bar
Residual: _____ psi bar
Venting valve location: _____

Where injection systems are used to treat MIC or corrosion:
Type of chemical: _____ Concentration: _____ For proper disposal, see:
DESIGNER
Name of contractor or designer: TEP ENGINEERING, INC
Address: 880 2ND STREET, SANTA ROSA, CA 95404
Phone: (707) 538-0400

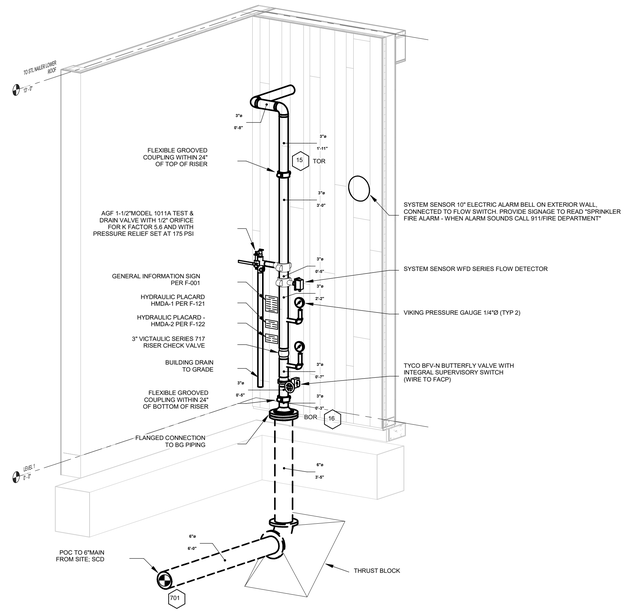

1 FIRE RISER
NOT TO SCALE

FIRE PROTECTION DRAWING LIST	
Sheet Number	Sheet Name
F-001	FIRE PROTECTION LEGEND, NOTES & DETAILS
F-111	FIRE PROTECTION SITE PLAN
F-121	FIRE PROTECTION PLAN - PHASE 1
F-122	FIRE PROTECTION PLAN - PHASE 2
F-301	FIRE PROTECTION SECTIONS
F-501	FIRE PROTECTION DETAILS
F-502	FIRE PROTECTION DETAILS

AGENCY APPROVAL STAMP:
IDENTIFICATION STAMP
DIV. OF THE STATE ARCHITECT
APP: 01-120890 INC:
REVIEWED FOR
SS ☑ FLS ☑ ACS ☑
DATE: 10/25/2023

TLCDARCHITECTURE
520 Third St. #250
Santa Rosa, CA 95401
o: 707.525.5600
f: 707.525.5616
tlcd.com

CONSULTANT:
TEP ENGINEERING
880 Second Street
Santa Rosa, CA 95404-4610
707.538.0400 office
707.538.0406 fax

STAMP:
REGISTERED PROFESSIONAL ENGINEER
M29511
Exp.Date 6-30-25
MECHANICAL
STATE OF CALIFORNIA

REVISIONS:

Number	Date	Description

NAPA VALLEY COLLEGE WINE EDUCATION CENTER

2277 NAPA VALLEJO HWY
NAPA, CA 94558

NAPA VALLEY COLLEGE
DSA APPLICATION NUMBER:

TEP PROJECT NUMBER:
TEP 83650

DATE:
10/11/2023

FIRE PROTECTION LEGEND, NOTES & DETAILS

F-001

© THESE DRAWINGS ARE INSTRUMENTS OF SERVICE AND ARE THE SOLE PROPERTY OF TLCD ARCHITECTURE. ANY USE WITHOUT WRITTEN CONSENT IS PROHIBITED.

10/9/2023 9:53:30 PM

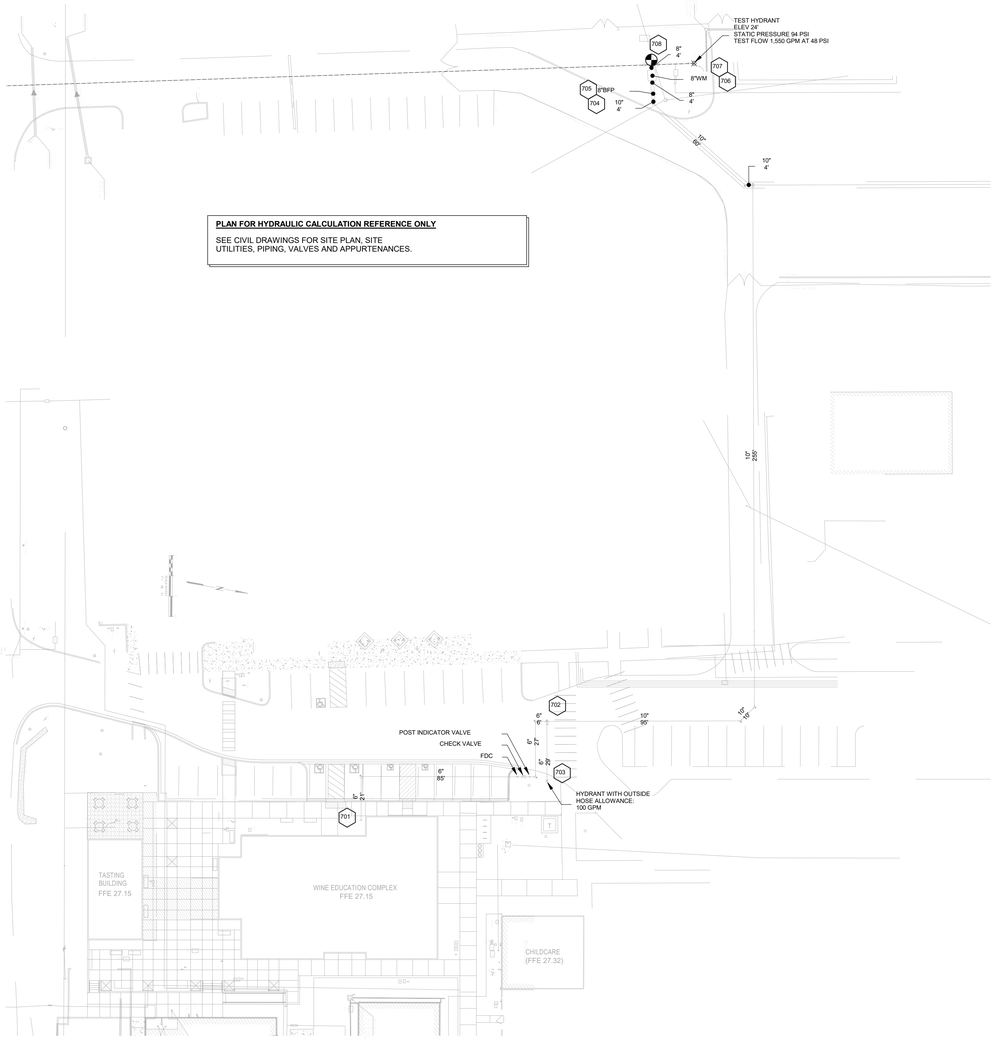

1 SITE FIRE PROTECTION PLAN

1" = 30'-0"

AGENCY APPROVAL STAMP:

IDENTIFICATION STAMP
DIV. OF THE STATE ARCHITECT
APP: 01-120890 INC:
REVIEWED FOR
SS ☑ FLS ☑ ACS ☑
DATE: 10/25/2023

TLCDARCHITECTURE
520 Third St. #250
Santa Rosa, CA 95401
o: 707.525.5600
f: 707.525.5616
tlcd.com

CONSULTANT:
TEP ENGINEERING
880 Second Street
Santa Rosa, CA 95404-4610
707.538.0400 office
707.538.0406 fax

STAMP

REGISTERED PROFESSIONAL ENGINEER
M29511
Exp.Date 6-30-25
MECHANICAL
STATE OF CALIFORNIA

REVISIONS:

Number	Date	Description

NAPA VALLEY COLLEGE WINE EDUCATION CENTER

2277 NAPA VALLEJO HWY
NAPA, CA 94558

NAPA VALLEY COLLEGE

DSA APPLICATION NUMBER:

TEP PROJECT NUMBER:
TEP 23650

DATE:
10/11/2023

FIRE PROTECTION SITE PLAN

F-111

© THESE DRAWINGS AND INSTRUMENTS OF SERVICE ARE THE SOLE PROPERTY OF TLCD ARCHITECTURE. MAY USE WITHOUT WRITTEN CONSENT IS PROHIBITED.

10/9/2023 9:53:30 PM

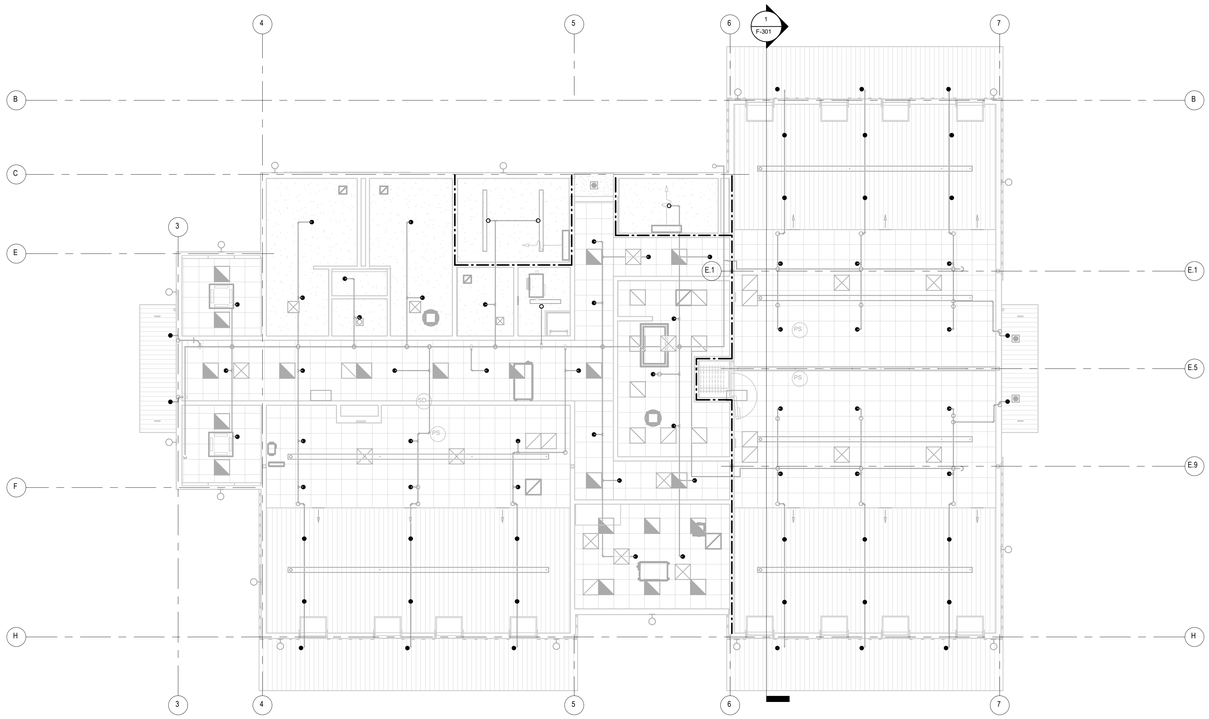

2 FIRE PROTECTION RCP PLAN - PHASE 1

1/8" = 1'-0"

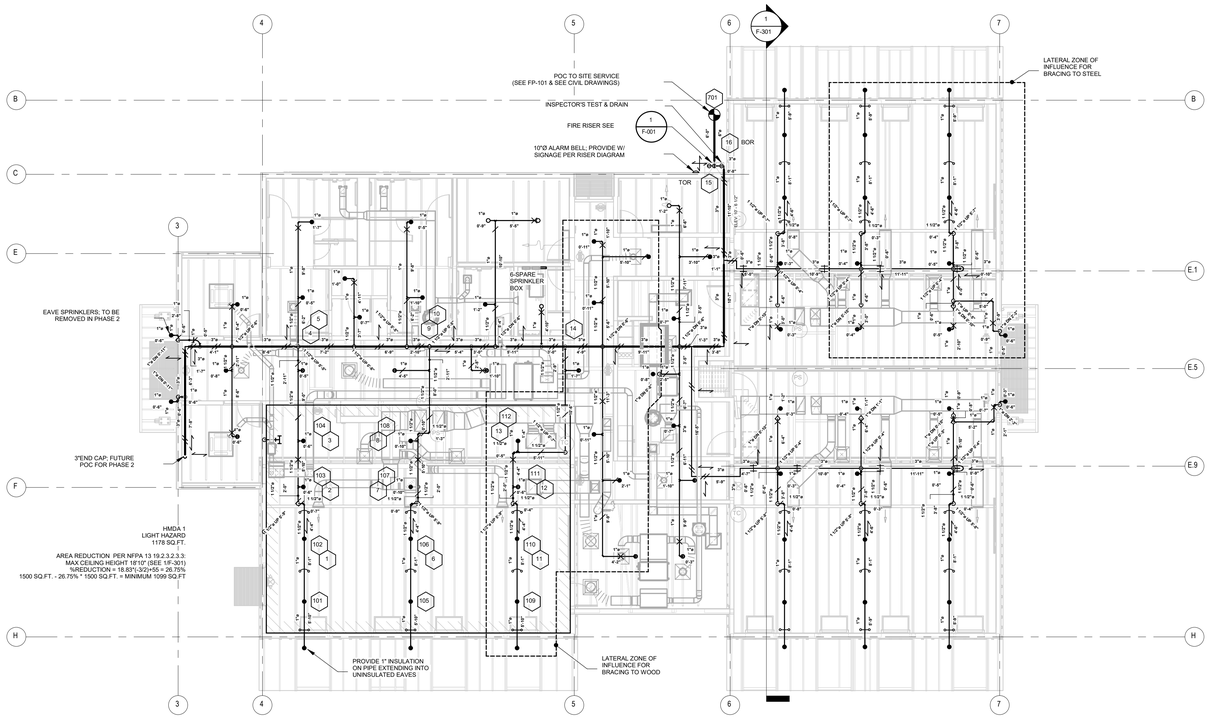

1 FIRE PROTECTION PLAN - PHASE 1

1/8" = 1'-0"

OVERHEAD PIPING PLAN

1. SEE SHEET F-001 FOR GENERAL NOTES AND SEE SHEET F501 FOR DETAILS.
2. HANG ALL PIPE PER DETAILS ON SHEET F501.
   - INDICATES COACH SCREW
   - SIDE BEAM BRACKET WITH RING HANGER
3. BRACE ALL PIPE PER DETAILS ON SHEET F501.
   - INDICATES LOCATION OF BRANCH LINE RESTRAINT
   - INDICATES LONGITUDINAL BRACE
   - INDICATES LATERAL BRACE
   - INDICATES 4-WAY BRACE
4. ALL DROPS ARE 1" w/ 1" x 1/2" REDUCING COUPLING

79 / 155°	VIKING "MICROFAST" QR CHROME RECESSED SSP				
	1/2" ORIFICE	1/2" NPT	K=5.60	S.I.N. VK302	
4 / 155°	VIKING "MICROFAST" QR BRASS UPRIGHT SSU				
	1/2" ORIFICE	1/2" NPT	K=5.60	S.I.N. VK300	

79 SPRINKLERS THIS SHEET.
(PHASE1 ONLY)

HYDRAULIC DATA PLATE - HMDA 1

PROJECT:	NVC WINE EDUCATION CENTER			INSTALL DATE:	
ADDRESS:	2277 NAPA VALLEJO HWY			DESIGN ZONE:	HMDA 1
DESIGN OCCUPANCY CLASSIFICATION:	LIGHT HAZARD			TOTAL SYSTEM AREA:	10467 SQ.FT.
DESIGN STANDARD:	2022 EDITION OF NFPA 13			SYSTEM TYPE:	WET PIPE
AVERAGE HYDRAULIC GRADIENT:	10 DPSI/FT			AVERAGE DESIGN AREA:	1178 SQ.FT.
SPRINKLER MANUFACTURER:	VIKING	SPRINKLER DATE:	2023	SPRINKLER:	VK302/QR PENDENT
SPRINKLER ORIFICE:	1/2"	SPRINKLER K-FACTOR:	5.6	SPRINKLER RATING:	155 F
SPRINKLER DESIGN PRESSURE:	150 PSI/FT	HYDRAULIC DESIGN FLOW:	12	HOSE STREAM DEMAND INCLUDED:	100 GPM
TOTAL DESIGN FLOW:	102				
TOTAL SPRINKLER FLOW:	15 GPM	RESIDUAL PRESSURE:	7.2 PSI	TOTAL HYDRAULIC DEMAND:	217.4 GPM
TOTAL HOSE STREAM FLOW:	217.4 GPM			WATER SUPPLY AVAILABLE:	30.3 PSI
WATER SUPPLY SYSTEM SUPPLY:	317.4 GPM			WATER SUPPLY RESIDUAL PRESSURE:	42.1 PSI
FIRE PROTECTION SUPPLY INFORMATION:	FLOW DATE: 94 DAY		RESIDUAL PRESSURE: 48 PSI	FLOW RATE: 1550 GPM	
WATER SUPPLY FACILITY/FLOW AT:	HYDRANT AT 2277 NAPA VALLEJO HWY				
WATER SUPPLY PROVIDED BY:	CITY OF NAPA WATER DIVISION			CALCULATION DATE:	02-03-22
APPROVALS REQUIRED:	DSA AND LOCAL JURISDICTION				

KEYPLAN

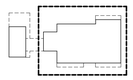

AGENCY APPROVAL STAMP:

IDENTIFICATION STAMP
DIV. OF THE STATE ARCHITECT
APP: 01-120890 INC:
REVIEWED FOR
SS ☑ FLS ☑ ACS ☑
DATE: 10/25/2023

TLCDARCHITECTURE
520 Third St. #250
Santa Rosa, CA 95401
o: 707.525.5600
f: 707.525.5616
tlcd.com

CONSULTANT:
TEP ENGINEERING
880 Second Street
Santa Rosa, CA 95404-4610
707.538.0400 office
707.538.0406 fax

STAMP:

REGISTERED PROFESSIONAL ENGINEER
M29511
Exp.Date 6-30-25
MECHANICAL
STATE OF CALIFORNIA

REVISIONS:

Number	Date	Description

NAPA VALLEY COLLEGE WINE EDUCATION CENTER

2277 NAPA VALLEJO HWY
NAPA, CA 94558

NAPA VALLEY COLLEGE
DSA APPLICATION NUMBER:

TEP PROJECT NUMBER:
TEP 83650

DATE:
10/11/2023

FIRE PROTECTION PLAN - PHASE 1

F-121

© THESE DRAWINGS ARE INSTRUMENTS OF SERVICE AND ARE THE SOLE PROPERTY OF TLCD ARCHITECTURE. ANY USE WITHOUT WRITTEN CONSENT IS PROHIBITED.

10/9/2023 9:53:34 PM

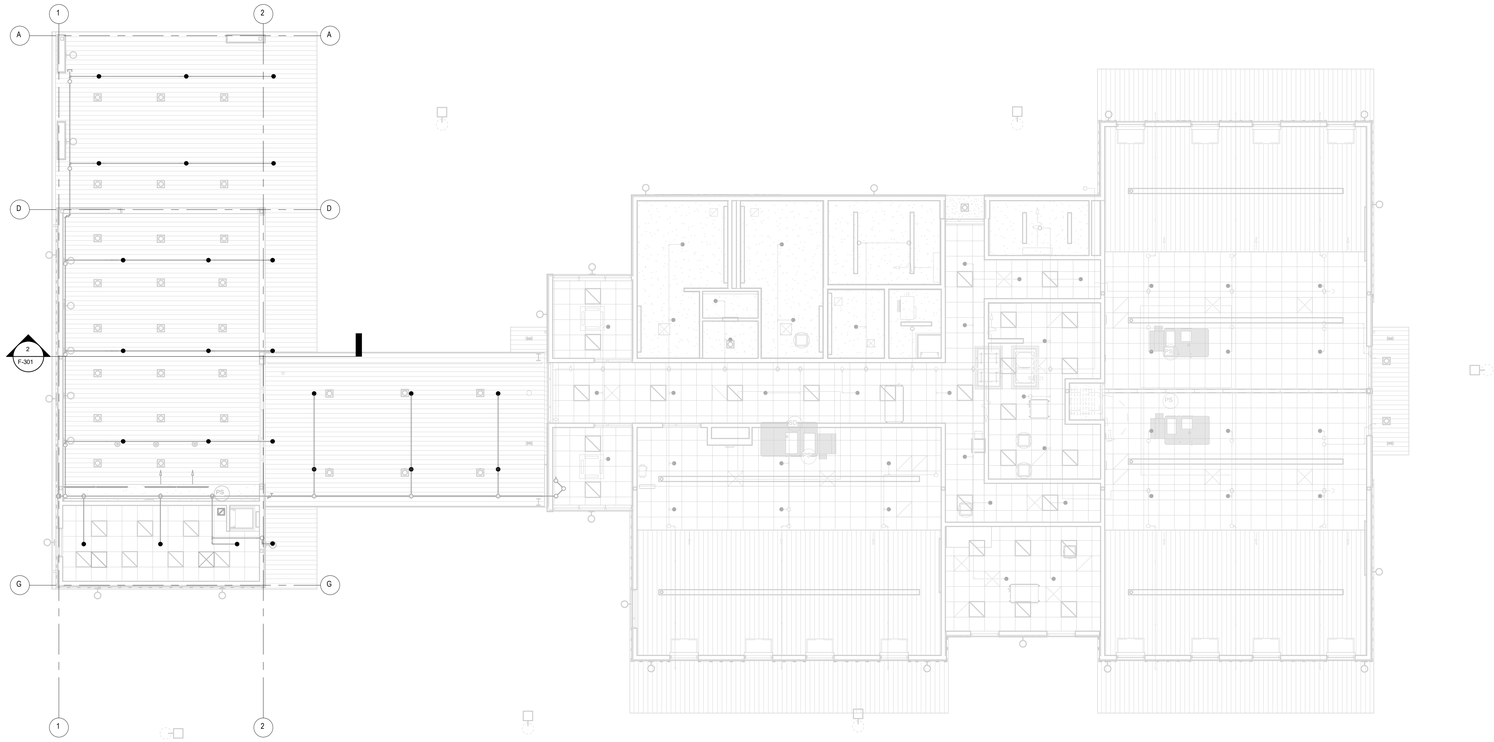

2 FIRE PROTECTION RCP PLAN - PHASE 2

1/8" = 1'-0"

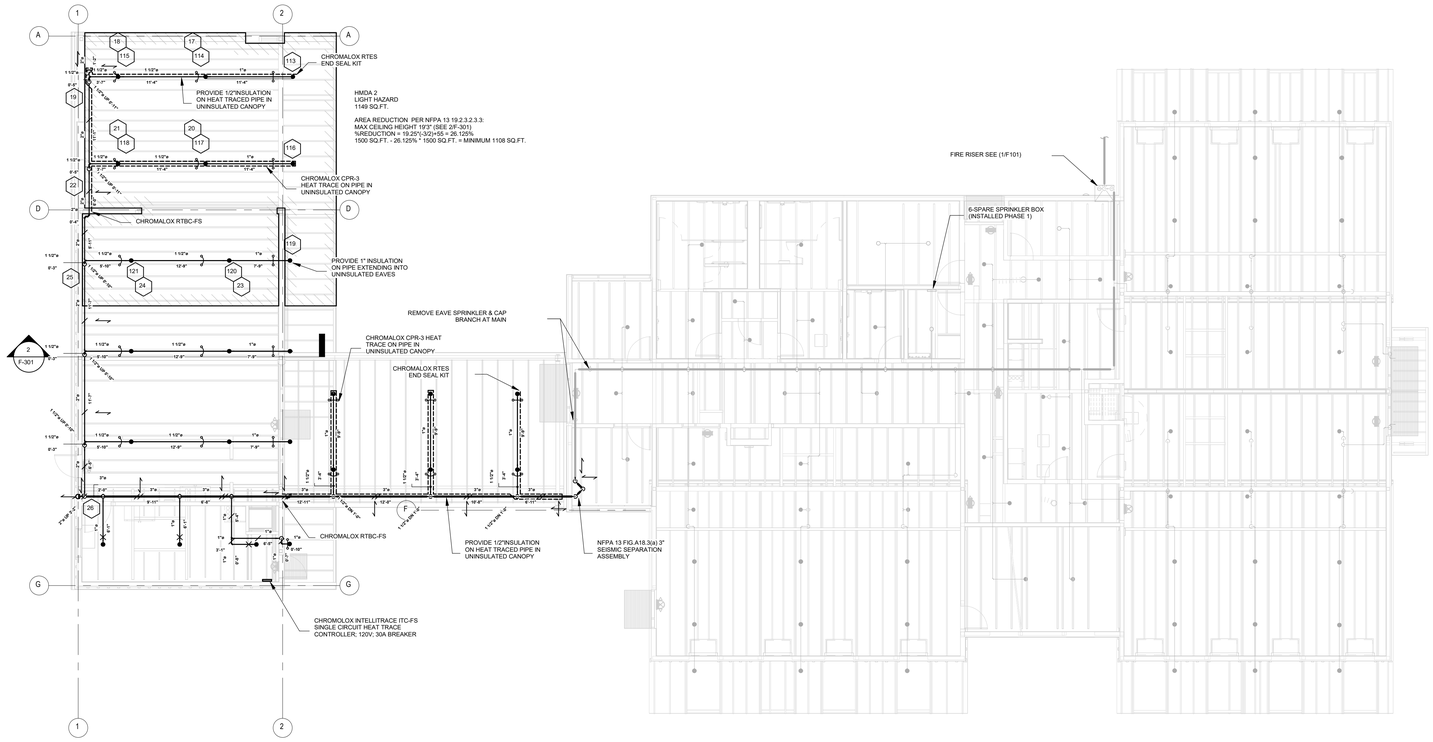

1 FIRE PROTECTION PLAN - PHASE 2

1/8" = 1'-0"

OVERHEAD PIPING PLAN

1. SEE SHEET F-001 FOR GENERAL NOTES AND SEE SHEET F501 FOR DETAILS.
2. HANG ALL PIPE PER DETAILS ON SHEET F501.
   - INDICATES COACH SCREW
   - SIDE BEAM BRACKET WITH RING HANGER
3. BRACE ALL PIPE PER DETAILS ON SHEET F501.
   - INDICATES LOCATION OF BRANCH LINE RESTRAINT
   - INDICATES LONGITUDINAL BRACE
   - INDICATES LATERAL BRACE
   - INDICATES 4-WAY BRACE
4. ALL DROPS ARE 1" w/ 1" x 1/2" REDUCING COUPLING

98 / 155° — VIKING "MICROFAST" QR CHROME RECESSED SSP — 1/2" ORIFICE 1/2" NPT K=5.60 S.I.N. VK302

4 / 155° — VIKING "MICROFAST" QR BRASS UPRIGHT SSU — 1/2" ORIFICE 1/2" NPT K=5.60 S.I.N. VK300

102 SPRINKLERS THIS SHEET
(INCLUDES PHASES 1 AND 2)

HYDRAULIC DATA PLATE - AREA 2

PROJECT:	NVC WINE EDUCATION CENTER			INSTALL DATE:	
ADDRESS:	2277 NAPA VALLEJO HWY			DESIGN ZONE:	HMDA 2
INSTALLING CONTRACTOR:					
HAZARD CLASSIFICATION:	LIGHT HAZARD			TOTAL SYSTEM AREA:	10467 SQ.FT
BASIS OF DESIGN(S):	2022 EDITION OF NFPA 13			SYSTEM TYPE:	WET PIPE
HYDRAULIC DESIGN DENSITY:	.10 GPM/SQ.FT			HYDRAULIC DESIGN AREA:	1149 SQ.FT
SPRINKLER MANUFACTURER:	VIKING	SPRINKLER DATE:	2023	SPRINKLER:	VK302/QR PENDENT
SPRINKLER ORIFICE:	1/2"	SPRINKLER K FACTOR:	5.6	DESIGN STRIKE:	155 F
PROTECTION AREA/SPRINKLER:	160 SQ.FT	SPRINKLERS FLOWING:	9	OUTSIDE HOSE FLOWING:	100 GPM
TOTAL SPRINKLERS IN SYSTEM:	102				
END SPRINKLER FLOW:	16 GPM	RESIDUAL PRESSURE:	8.2 PSI	TOTAL SPRINKLER FLOW REQ:	158.8 GPM
DEMAND AT BASE OF RISER:	158.8 GPM			RISER REQUIRED PRESSURE:	43.1 PSI
DEMAND AT SYSTEM SUPPLY:	258.8 GPM			SUPPLY REQUIRED PRESSURE:	54.6 PSI
CALCULATED WATER SUPPLY AVAILABILITY:	STATIC PRESSURE: 94 PSI	RESIDUAL PRESSURE: 48 PSI		FLOW:	1550 GPM
WATER SUPPLY AT:	HYDRANT AT 2277 NAPA VALLEJO HWY				
WATER SUPPLY BY:	CITY OF NAPA WATER DIVISION			CALCULATION DATE:	02-03-22
APPROVALS REQUIRED:	DSA AND LOCAL JURISDICTION				

KEYPLAN

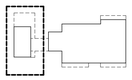

AGENCY APPROVAL STAMP:

IDENTIFICATION STAMP
DIV. OF THE STATE ARCHITECT
APP: 01-120890 INC:
REVIEWED FOR
SS ☑ FLS ☑ ACS ☑
DATE: 10/25/2023

TLCDARCHITECTURE
520 Third St. #250
Santa Rosa, CA 95401
o: 707.525.5600
f: 707.525.5616
tlcd.com

CONSULTANT:
TEP ENGINEERING
880 Second Street
Santa Rosa, CA 95404-4610
707.538.0400 office
707.538.0406 fax

STAMP:

REGISTERED PROFESSIONAL ENGINEER
Timothy S. Boyce
M29511
Exp.Date 6-30-25
MECHANICAL
STATE OF CALIFORNIA

REVISIONS:

Number	Date	Description

NAPA VALLEY COLLEGE WINE EDUCATION CENTER

2277 NAPA VALLEJO HWY
NAPA, CA 94558

NAPA VALLEY COLLEGE
DSA APPLICATION NUMBER:

TEP PROJECT NUMBER:
TEP 83650

DATE:
10/11/2023

FIRE PROTECTION PLAN - PHASE 2

F-122

© THESE DRAWINGS ARE INSTRUMENTS OF SERVICE AND ARE THE SOLE PROPERTY OF TLCD ARCHITECTURE. ANY USE WITHOUT WRITTEN CONSENT IS PROHIBITED.

10/9/2023 9:53:37 PM

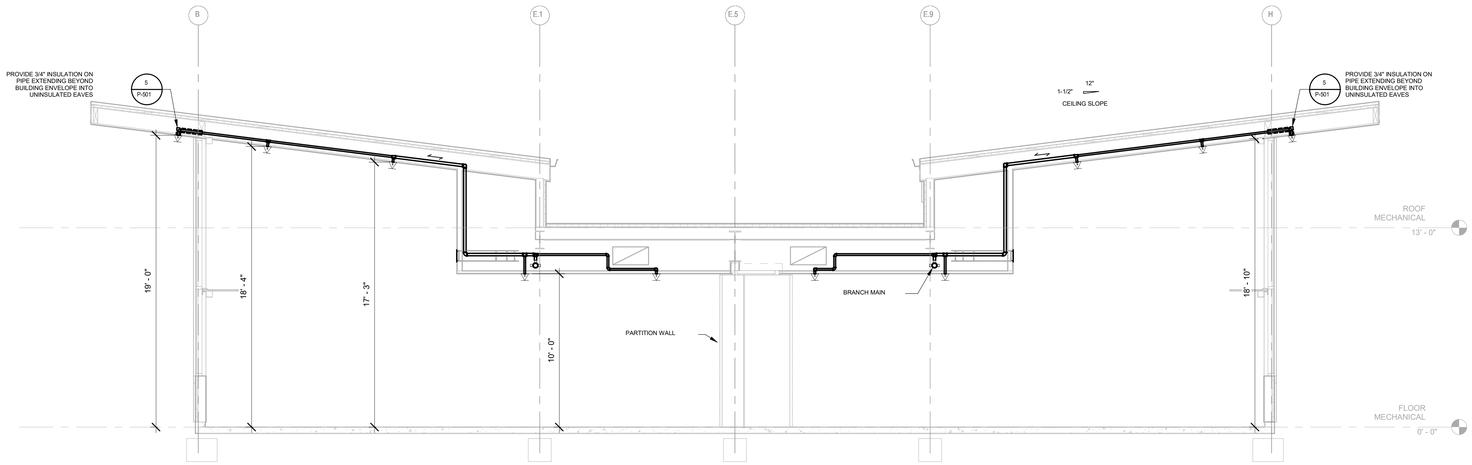

1 **FIRE SPRINKLER SECTION - SENSORY CLASSROOMS**

1/4" = 1'-0"

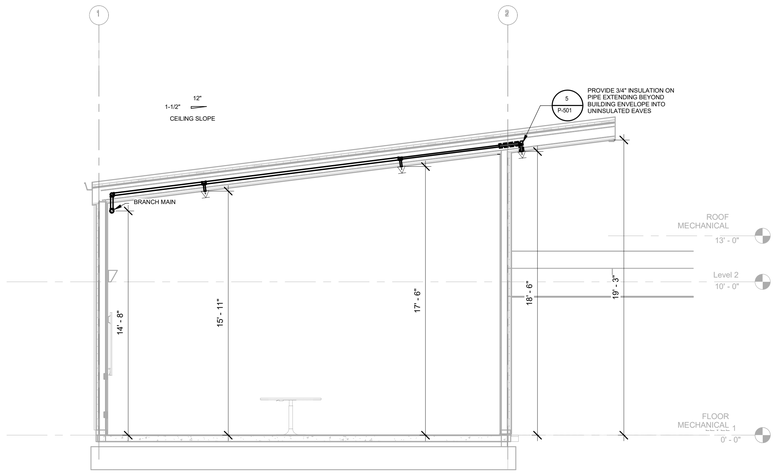

2 **FIRE SPRINKLER SECTION - TASTING**

1/4" = 1'-0"

AGENCY APPROVAL STAMP:

IDENTIFICATION STAMP
DIV. OF THE STATE ARCHITECT
APP: 01-120890 INC:
REVIEWED FOR
SS ☑ FLS ☑ ACS ☑
DATE: 10/25/2023

TLCDARCHITECTURE
520 Third St. #250
Santa Rosa, CA 95401
o: 707.525.5600
f: 707.525.5616
tlcd.com

CONSULTANT:
TEP ENGINEERING
880 Second Street
Santa Rosa, CA 95404-4610
707.538.0400 office
707.538.0406 fax

STAMP:

REGISTERED PROFESSIONAL ENGINEER
TIM D SOUZA
M29511
Exp.Date 6-30-25
MECHANICAL
STATE OF CALIFORNIA

REVISIONS:

Number	Date	Description

NAPA VALLEY COLLEGE WINE EDUCATION CENTER

2277 NAPA VALLEJO HWY
NAPA, CA 94558

NAPA VALLEY COLLEGE
DSA APPLICATION NUMBER

TEP PROJECT NUMBER
TEP #3650

DATE
10/11/2023

FIRE PROTECTION SECTIONS

F-301

10/9/2023 9:53:37 PM

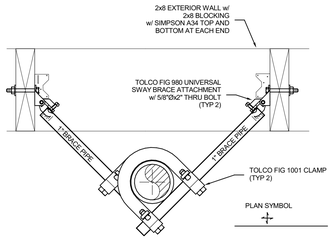

9 4-WAY RISER BRACE

NOT TO SCALE

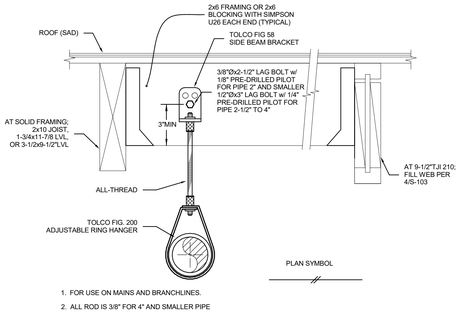

1. FOR USE ON MAINS AND BRANCHLINES.
2. ALL ROD IS 3/8" FOR 4" AND SMALLER PIPE

5 THREADED SIDE BEAM BRACKET & RING HANGER

NOT TO SCALE

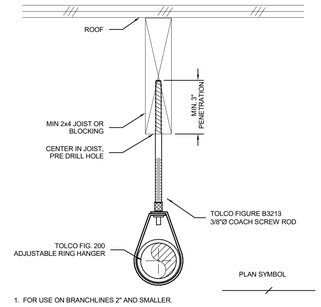

1. FOR USE ON BRANCHLINES 2" AND SMALLER.

1 COACH SCREW TO FRAMING

NOT TO SCALE

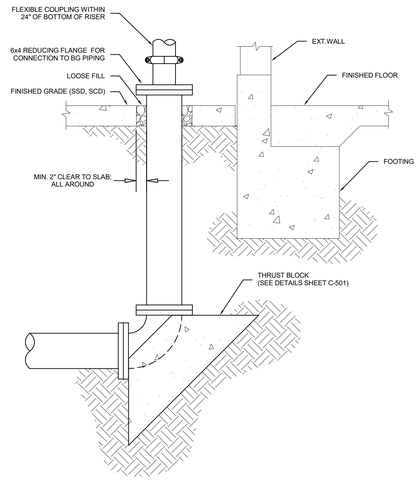

10 RISER TRANSITION FROM BELOW GRADE

NOT TO SCALE

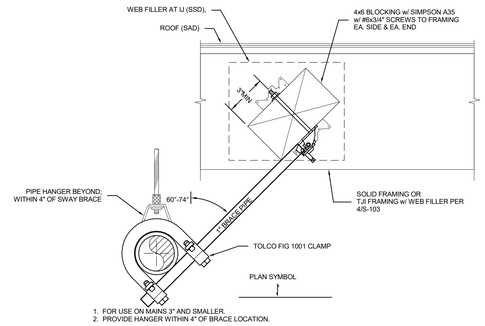

1. FOR USE ON MAINS 3" AND SMALLER.
2. PROVIDE HANGER WITHIN 4" OF BRACE LOCATION.

6 LATERAL BRACE PARALLEL TO FRAMING

NOT TO SCALE

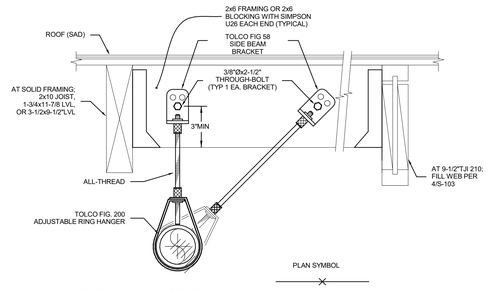

1. FOR USE ON BRANCHLINES 2" AND SMALLER.
2. ALL ROD IS 3/8" FOR 4" AND SMALLER PIPE

2 BRANCH LINE RESTRAINT

NOT TO SCALE

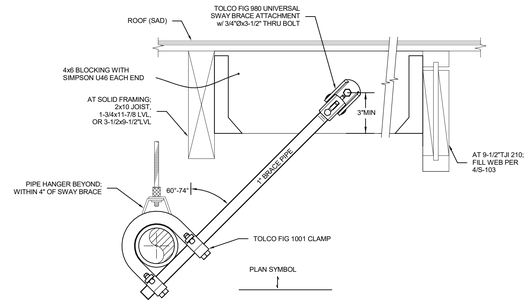

1. FOR USE ON MAINS 3" AND SMALLER.
2. PROVIDE HANGER WITHIN 4" OF BRACE LOCATION.

7 LATERAL BRACE PERPENDICULAR TO FRAMING

NOT TO SCALE

NTS

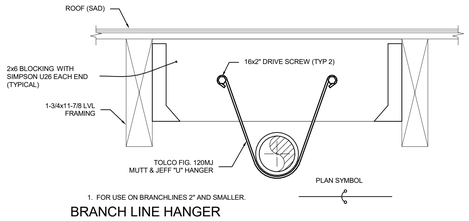

1. FOR USE ON BRANCHLINES 2" AND SMALLER.

BRANCH LINE HANGER

3 U-HOOK BRANCH LINE HANGER

NOT TO SCALE

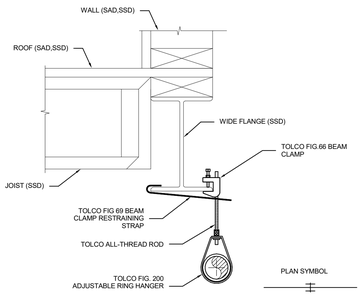

1. FOR USE ON MAINS AND BRANCHLINES AT WIDE FLANGE BEAMS.
2. ALL ROD IS 3/8" FOR 3" AND SMALLER PIPE

11 **HANGER TO STEEL**

12" = 1'-0"

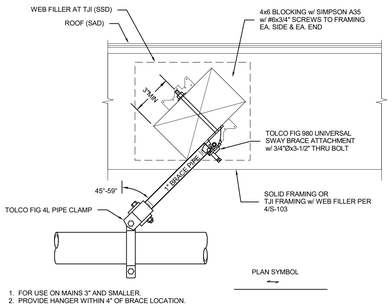

1. FOR USE ON MAINS 3" AND SMALLER.
2. PROVIDE HANGER WITHIN 4" OF BRACE LOCATION.

8 LONGITUDINAL BRACE

NOT TO SCALE

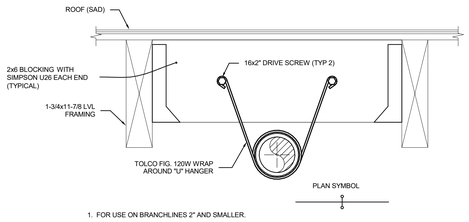

1. FOR USE ON BRANCHLINES 2" AND SMALLER.

4 WRAPAROUND BRANCH LINE RESTRAINT

NOT TO SCALE

AGENCY APPROVAL STAMP:

IDENTIFICATION STAMP
DIV. OF THE STATE ARCHITECT
APP: 01-120890 INC:
REVIEWED FOR
SS ☑ FLS ☑ ACS ☑
DATE: 10/25/2023

TLCDARCHITECTURE
520 Third St. #250
Santa Rosa, CA 95401
o: 707.525.5600
f: 707.525.5616
tlcd.com

CONSULTANT:
TEP ENGINEERING
880 Second Street
Santa Rosa, CA 95404-4610
707.538.0400 office
707.538.0406 fax

STAMP

REGISTERED PROFESSIONAL ENGINEER
M29511
Exp.Date 6-30-25
MECHANICAL
STATE OF CALIFORNIA

REVISIONS:

Number	Date	Description

NAPA VALLEY COLLEGE WINE EDUCATION CENTER

2277 NAPA VALLEJO HWY
NAPA, CA 94558

NAPA VALLEY COLLEGE
DSA APPLICATION NUMBER:

TEP PROJECT NUMBER:
TEP #3650

DATE:
10/11/2023

FIRE PROTECTION DETAILS

F-501

© THESE DRAWINGS ARE INSTRUMENTS OF SERVICE AND ARE THE SOLE PROPERTY OF TLCD ARCHITECTURE. WITH USE WITHOUT WRITTEN CONSENT IS PROHIBITED.

10/9/2023 9:53:38 PM

TOLBrace™ Seismic Bracing Calculations

V8.8.135

Project Address: NVC Wine Education Center
2277 Napa Vallejo Hwy
Napa, CA
Job # 3650

Contractor: TEP Engineering, Inc
Address: 880 2nd St
Santa Rosa, CA 95404
Phone: 707 538-0400
License: Tim Souza M29511

EATON Powering Business Worldwide

Calculations based on 2022 NFPA Pamphlet #13

Brace Information

Maximum Brace Length	7' 0" (2.134 m)
Diameter of Brace	1"
Type of Brace	Sch.40
Angle of Brace	45° Min.
Least Rad. of Gyration	0.42" (11 mm)
L/R Value	200
Max Horizontal Load	1310 lbs (594 kg)
Other Requirements - FM Approved Loads	

Fastener Information

Orientation to Connecting Surface	NFPA Type H
Fastener	
Type	3/4in. x 3 1/2in. Thru Bolt
Diameter	3/4in.
Length	3 1/2in.
Maximum Load	455 lbs (206 kg)
Prying Factor	N/A

TOLCO™ Brace Components

TOLCO™ Component	Listed Load	Adjusted Load
Fig. 4L Clamp	650 lbs (295 kg)	650 lbs (295 kg)
Fig.980 - 3/4" Universal Swivel	2790 lbs (1266 kg)	2790 lbs (1266 kg)
See Fastener Information		

*Calculation Based on CONCENTRIC Loading

*Please Note: These calculations are for TOLCO™ components only. Use of any other components voids these calculations and the listing of the assembly.

Seismic Brace Assembly Detail

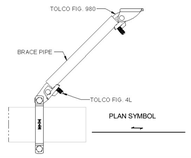

Brace Identification on Plans Longitudinal to Wood

Brace Type Lateral [ ] Longitudinal [X] 4-Way [ ]

Sprinkler System Load Calculation (Fpw = CpWp)

Cp = 1.126

Diameter	Type	Length	Total Length	Weight Per Unit Length	Total Weight
3" (80 mm)	Sch. 10	40 ft (12.2 m)	40 ft (12.2 m)	7.94 lb/ft (11.82 kg/m)	318 lbs (144 kg)

Subtotal Weight	318 lbs (144 kg)
Wp (incl. 15%)	366 lbs (166 kg)
Total (Fpw)	412 lbs (187 kg)
Maximum Fpw per 18.5.5.2 (if applicable)	N/A

Main Size	Type/Sch.	Spacing (ft)
3"	Sch. 10	40

(TOLBrace™ Version 8)

Use of TOLBrace™ is subject to terms and conditions per the end user license agreement

2 LONGITUDINAL BRACING CALCULATION

NOT TO SCALE

TOLBrace™ Seismic Bracing Calculations

V8.8.135

Project Address: NVC Wine Education Center
2277 Napa Vallejo Hwy
Napa, CA
Job # 3650

Contractor: TEP Engineering, Inc
Address: 880 2nd St
Santa Rosa, CA 95404
Phone: 707 538-0400
License: Tim Souza M29511

EATON Powering Business Worldwide

Calculations based on 2022 NFPA Pamphlet #13

Brace Information

Maximum Brace Length	7' 0" (2.134 m)
Diameter of Brace	1"
Type of Brace	Sch.40
Angle of Brace	60° Min.
Least Rad. of Gyration	0.42" (11 mm)
L/R Value	200
Max Horizontal Load	1604 lbs (728 kg)
Other Requirements - FM Approved Loads	

Fastener Information

Orientation to Connecting Surface	NFPA Type I
Fastener	
Type	3/4in. x 3 1/2in. Thru Bolt
Diameter	3/4in.
Length	3 1/2in.
Maximum Load	730 lbs (331 kg)
Prying Factor	N/A

TOLCO™ Brace Components

TOLCO™ Component	Listed Load	Adjusted Load
Fig. 1001 Clamp	1470 lbs (667 kg)	1470 lbs (667 kg)
Fig.980 - 3/4" Universal Swivel	3360 lbs (1524 kg)	3360 lbs (1524 kg)
See Fastener Information		

*Calculation Based on CONCENTRIC Loading

*Please Note: These calculations are for TOLCO™ components only. Use of any other components voids these calculations and the listing of the assembly.

Seismic Brace Assembly Detail

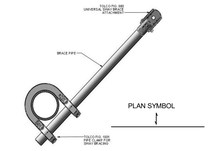

Brace Identification on Plans Lateral To Wood-1

Brace Type Lateral [X] Longitudinal [ ] 4-Way [ ]

Sprinkler System Load Calculation (Fpw = CpWp)

Cp = 1.126

Diameter	Type	Length	Total Length	Weight Per Unit Length	Total Weight
3" (80 mm)	Sch. 10	20 ft (6.1 m)	20 ft (6.1 m)	7.94 lb/ft (11.82 kg/m)	159 lbs (72 kg)
1.5" (40 mm)	Sch. 40	66 ft (20.1 m)	66 ft (20.1 m)	3.61 lb/ft (5.37 kg/m)	238 lbs (108 kg)
1" (25 mm)	Sch. 40	63 ft (19.2 m)	63 ft (19.2 m)	2.05 lb/ft (3.05 kg/m)	129 lbs (59 kg)

Subtotal Weight	526 lbs (239 kg)
Wp (incl. 15%)	605 lbs (274 kg)
Total (Fpw)	681 lbs (309 kg)
Maximum Fpw per 18.5.5.2 (if applicable)	966 lb (438 kg)

Main Size	Type/Sch.	Spacing (ft)
3"	Sch. 10	20

(TOLBrace™ Version 8)

Use of TOLBrace™ is subject to terms and conditions per the end user license agreement

1 LATERAL BRACING CALCULATION - WOOD

NOT TO SCALE

AGENCY APPROVAL STAMP:

IDENTIFICATION STAMP
DIV. OF THE STATE ARCHITECT
APP: 01-120890 INC:
REVIEWED FOR
SS ☑ FLS ☑ ACS ☑
DATE: 10/25/2023

TLCDARCHITECTURE
520 Third St. #250
Santa Rosa, CA 95401
o: 707.525.5600
f: 707.525.5616
tlcd.com

CONSULTANT:
TEP ENGINEERING
880 Second Street
Santa Rosa, CA 95404-4610
707.538.0400 office
707.538.0406 fax

STAMP:

REGISTERED PROFESSIONAL ENGINEER
M29511
Exp.Date 6-30-25
MECHANICAL
STATE OF CALIFORNIA

REVISIONS:

Number	Date	Description

NAPA VALLEY COLLEGE WINE EDUCATION CENTER

2277 NAPA VALLEJO HWY
NAPA, CA 94558

NAPA VALLEY COLLEGE
DSA APPLICATION NUMBER

TEP PROJECT NUMBER
TEP #3650

DATE
10/11/2023

FIRE PROTECTION DETAILS

F-502

© THESE DRAWINGS ARE INSTRUMENTS OF SERVICE AND ARE THE SOLE PROPERTY OF TLCD ARCHITECTURE. ANY USE WITHOUT WRITTEN CONSENT IS PROHIBITED.

10/9/2023 9:53:38 PM

GENERAL ABBREVIATIONS:

A	AMPERES
ACAMS	ACCESS CONTROL AND ALARM MONITORING SYSTEM
ACP	ACCESS CONTROL PANEL
ACS	ACCESS CONTROL SYSTEM
AFF	ABOVE FINISHED FLOOR
AHJ	AUTHORITY HAVING JURISDICTION
ALS	ASSISTIVE LISTENING SYSTEM
AMP	AMPLIFIER
AOR	ARCHITECT OF RECORD
AUD	AUDIO
AUTO	AUTOMATIC
AUX	AUXILARY
AV	AUDIOVISUAL
AVC	AUDIOVISUAL CONTRACTOR
AVTC	AUDIOVISUAL TERMINAL CABINET
AWG	AMERICAN WIRE GAUGE
BCT	BONDING CONDUCTOR FOR TELECOMMUNICATIONS
BP	BROADCAST PANEL
C	CONDUIT
CAM	CAMERA
CATV	COMMUNITY ANTENNA TELEVISION SYSTEM
CFCI	CONTRACTOR FURNISHED, CONTRACTOR INSTALLED
CFOI	CONTRACTOR FURNISHED, OWNER INSTALLED
CL	CENTERLINE
CP	CONTROL PANEL
CPU	COMPUTER
CS	CONDUIT STUB
CSA	CHARLES SALTER ASSOCIATES
DA	DISTRIBUTION AMPLIFIER
DGP	DATA GATHERING PANEL
DIV	DIVISION
DMA	DOOR MANAGEMENT ALARM
DOC	DOCUMENT CAMERA
DP	PANEL DISPLAY
DS	DIGITAL SIGNAGE
DSP	DIGITAL SIGNAL PROCESSOR
DVI	DIGITAL VISUAL INTERFACE
E	EXISTING (E)
EC	ELECTRICAL CONTRACTOR
ECS	EMERGENCY COMMUNICATION SYSTEM
EF	ENTRANCE FACILITY FOR TELECOMMUNICATIONS (MPOE)
EMT	ELECTRICAL METALLIC TUBING
ER	EQUIPMENT ROOM
EXT	EXTERIOR
F	FUTURE (F)
FACP	FIRE ALARM CONTROL PANEL
FATC	FIRE ALARM TERMINAL CABINET
FB	FLOOR BOX
FO	FIBER OPTIC
FOV	FIELD OF VIEW
GC	GENERAL CONTRACTOR
GE	GROUNDING EQUALIZER
HDBT	HD BASE-T
HDMI	HIGH DEFINITION MULTIMEDIA INTERFACE
IC	INTERCOM
IDF	INTERMEDIATE DISTRIBUTION FRAME
IDS	INTRUSION DETECTION SYSTEM
INT	INTERIOR
IP	INTERNET PROTOCOL
IR	INFRARED
IT	INFORMATION TECHNOLOGY
JB	JUNCTION BOX
L	LEFT AUDIO
LS	LOUDSPEAKER
LVC	LOW VOLTAGE CONTROLLER
MATV	MASTER ANTENNA TELEVISION
MDF	MAIN DISTRIBUTION FRAME
MIC	MICROPHONE
MM	MULTIMODE
MPOE	MINIMUM POINT OF ENTRY

N	NEW (N)
NC	NORMALLY CLOSED
NET	NETWORK
NIC	NOT IN CONTRACT
NO	NORMALLY OPEN
NTS	NOT TO SCALE
OC	ON CENTER
OFCI	OWNER FURNISHED, CONTRACTOR INSTALLED
OFE	OWNER FURNISHED EQUIPMENT
OFOI	OWNER FURNISHED, OWNER INSTALLED
OSP	OUTSIDE PLANT
P	PAGING LOUDSPEAKER
PB	PULL BOX
PIR	PASSIVE INFRARED
PNL	PANEL
POE	POWER OVER ETHERNET
PPP	PORT PATCH PANEL
PR	PAIR OF CONDUCTORS
PROJ	PROJECTOR
PT	POKE THROUGH DEVICE
PTZ	PAN TILT ZOOM
PVC	POLYVINYL CHLORIDE
PWR	POWER
R	RIGHT AUDIO
RCP	REFLECTIVE CEILING PLAN
REX	REQUEST TO EXIT
RMC	RIGID METALLIC CONDUIT
RX	RECEIVER
S	LOUDSPEAKER
SAD	SEE ARCHITECTURAL DRAWINGS
SC	PROJECTOR SCREEN CONTROL
SCRN	PROJECTION SCREEN
SDI	SERIAL DIGITAL INTERFACE
SED	SEE ELECTRICAL DRAWINGS
SEH	SECURITY EQUIPMENT HUB
SM	SINGLE MODE
SMS	SECURITY MANAGEMENT SYSTEM
SPD	SURGE PROTECTION DEVICE
SR	SURROUND REAR LOUDSPEAKER
SS	SURROUND SIDE LOUDSPEAKER
STP	SHIELDED TWISTED PAIR
STR	STRANDS (OF FIBER)
SUB	SUBWOOFER LOUDSPEAKER
SY	SECURITY
SYS	SYSTEM
TB	TABLE BOX
TBB	TELECOMMUNICATIONS BONDING BACKBONE
TELCO	TELEPHONE COMPANY
TGB	TELECOMMUNICATIONS GROUNDING BUS BAR
TMGB	TELECOMMUNICATIONS MAIN GROUNDING BUS BAR
TP	TOUCH PANEL
TR	TELECOM ROOM (IDF)
TY	SECURITY
TYP	TYPICAL
UL	UNDERWRITERS LABORATORIES
UON	UNLESS OTHERWISE NOTED
UPS	UNINTERRUPTIBLE POWER SUPPLY
UTP	UNSHIELDED TWISTED PAIR
V	VOLTS
VAC	VOLTS, ALTERNATING CURRENT
VC	VOLUME CONTROL
VDA	VIDEO DISTRIBUTION AMPLIFIER
VDC	VOLTS, DIRECT CURRENT
VMS	VIDEO MATRIX SWITCH
VP	VIDEO PROJECTOR
VSS	VIDEO SURVEILLANCE SYSTEM
VTC	VIDEO TELECONFERENCE CAMERA
WB	WALL BOX
WM	WIRELESS MICROPHONE RECEIVER ANTENNA
WP	WEATHERPROOF

SHEET REFERENCE CONVENTIONS:

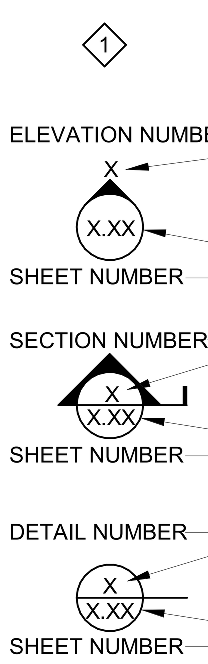

NUMBERED SHEET NOTE. ONLY APPLIES TO SHEET ON WHICH NOTE IS FOUND.

ELEVATION REFERENCE

SECTION REFERENCE

DETAIL REFERENCE OR CALL-OUT

TECHNOLOGY GENERAL NOTES:

GENERAL

1. ANY SHEET NOTES OR OTHER CALLOUTS IN THESE DRAWINGS THAT ASSIGN RESPONSIBILITY OF WORK TO SPECIFIC DIVISIONS ARE TO BE CONSIDERED AS A RECOMMENDATION ONLY.
2. REFER TO PROJECT MANUAL DIVISIONS 27 AND 28 FOR PROJECT SCOPE, PRODUCT SPECIFICATIONS, AND INSTALLATION REQUIREMENTS.
3. UNLESS OTHERWISE SPECIFICALLY DIMENSIONED, THESE DRAWINGS REPRESENT APPROXIMATE LOCATIONS OF DEVICES ONLY. REFER TO ARCHITECTURAL DRAWINGS FOR ADDITIONAL INFORMATION.
4. COMPLY WITH ADA REQUIREMENTS FOR MOUNTING HEIGHTS OF DEVICES.
5. REFER TO DIVISION 26 FOR POWER AND LIGHTING REQUIREMENTS.
6. REFER TO DIVISION 23 FOR COOLING REQUIREMENTS.
7. REFER TO AV AND SECUIRTY DRAWINGS FOR SPECIFIC MOUNTING OR ELEVATION INFORMATION. WHERE BOX MOUNTING ELEVATIONS ARE NOT NOTED OR SCHEDULED, ASSUME PROJECT STANDARD RECEPTACLE AND SWITCH MOUNTING ELEVATIONS.

CONDUIT AND BOXES

1. REFER TO DIVISION 26 FOR SCOPE REQUIREMENTS RELATED TO CONDUIT, JUNCTION BOXES, AND OTHER CONDUIT TERMINAL BOXES WHERE NOT ADDRESSED SPECIFICALLY IN THESE DRAWINGS.
2. CONDUIT ROUTING ON PLANS IS DIAGRAMMATIC. COORDINATE WITH OTHER TRADES PRIOR TO INSTALLATION TO AVOID CONFLICT.
3. PROVIDE PULL STRINGS IN CONDUITS. LABEL CONDUITS THAT ARE STUBBED-OUT, OR AT TERMINATION BOXES, INDICATING DESTINATION ROOM AT OPPOSITE END. LABELING CONDUIT BOXES IS NOT REQUIRED FOR CONDUIT STUBBED UP ABOVE CEILING.
4. PAINT BOXES AND LAST 12 INCHES OF ACCESSIBLE CONDUIT INSTALLED FOR LOW-VOLTAGE CIRCUITS A DISTINCTIVE AND DIFFERENT COLOR FROM OTHER TRADES' CONDUIT AND BOXES.
5. MAXIMUM TOTAL DEGREE OF SWEEP TYPE BENDS IN CONDUIT BETWEEN PULL POINTS IS 180 DEGREES. ADD PULL BOXES AS REQUIRED TO MEET THIS REQUIREMENT. MAKE BENDS BEFORE OR AFTER PULL BOXES. DO NOT CHANGE DIRECTION OF CONDUITS WITHIN PULL BOXES.
6. DO NOT USE JUNCTION BOXES, PULLING ELBOWS, OR PULL BOXES AS PATH TURNS FOR ANY STRUCTURED CABLING.
7. MARK AND COLOR-CODE JUNCTION BOXES AND TERMINAL CABINETS WITH THEIR BOX SCHEDULE NUMBER ON THE INSIDE OF THE BOX FACING THE ROOM, SUCH THAT THEY REMAIN IDENTIFIABLE AFTER CLOSURE OF WALLS.
8. PROVIDE 1-INCH CONDUIT TO TELECOMMUNICATIONS 4-11/16 INCH BACK BOXES; BOXES TO BE 3-INCH DEEP WITH SINGLE-GANG MUD RING UNLESS OTHERWISE NOTED.
9. REFER TO ARCHITECTURAL AND/OR ELECTRICAL DRAWINGS FOR ANY REQUIRED TECHNOLOGY-RELATED ACOUSTICAL MEASURES REGARDING CONDUIT PENETRATIONS, ELECTRICAL BOX SEALANT PADS, AND GYPSUM BOARD BOX-OUTS FOR LOUDSPEAKERS AND LARGE BOXES, ETC.
10. UNLESS OTHERWISE SHOWN OR NOTED, FLEXIBLE CONDUIT SHALL NOT BE USED WITHOUT TECHNOLOGY CONSULTANT'S WRITTEN APPROVAL.
11. FOR CONDUITS WITH INTERNAL DIAMETERS OF 2 INCHES OR LESS, THE INSIDE BEND RADIUS OF A BEND IN CONDUIT SHALL BE AT LEAST 6 TIMES THE CONDUIT INTERNAL DIAMETER. FOR CONDUITS WITH AN INTERNAL DIAMETER OF MORE THAN 2 INCHES, THE INSIDE RADIUS OF A BEND IN CONDUIT SHALL BE AT LEAST 10 TIMES THE CONDUIT INTERNAL DIAMETER.
12. PROVIDE A MINIMUM OF ONE 1-1/4-INCH CONDUIT TO EACH FLOOR BOX FOR TELECOM THAT IS SEPARATE FROM CONDUITS REQUIRED FOR AV AND POWER, UON.
13. INSTALL SEPARATE CONDUITS TO EACH FLOOR BOX. DO NOT PASS THROUGH ONE FLOOR BOX TO ACCESS ANOTHER BOX, UON.
14. JOIN PVC CONDUIT IN STRICT ACCORDANCE WITH ASTM D2855-15 STANDARD PRACTICE FOR THE TWO-STEP (PRIMER AND SOLVENT CEMENT) METHOD OF JOINING POLY (VINYL CHLORIDE) (PVC) OR CHLORINATED POLY (VINYL CHLORIDE) (CPVC) PIPE AND PIPING COMPONENTS WITH TAPERED SOCKETS, NO EXCEPTIONS.

PROCESS

1. REPORT ANY OBSERVATIONS OR CONDITIONS AT TIME OF DISCOVERY THAT PREVENT THE CORRECT INSTALLATION OF THE DESIGNED SYSTEM ACCORDING TO THE DRAWINGS AND SPECIFICATIONS.
2. SUBMIT REQUESTS-FOR-INFORMATION (RFI) THROUGH THE DIVISION 01 PRESCRIBED COMMUNICATIONS PROTOCOL.
3. WHEN AN APPARENT CONFLICT EXIST BETWEEN LOW-VOLTAGE DISCIPLINES AND OTHER DISCIPLINES, RESOLVE THROUGH RFI PROCESS.
4. CREATE AND SUBMIT SHOP DRAWINGS SHOWING BACK BOX AND CONDUIT COORDINATION FOR DIVISIONS 27 AND 28.
5. INSTALLATION OF FLOOR BOXES IS DIVISION 26 SCOPE. COORDINATE FLOOR BOX REQUIREMENTS AS DETAILED IN THESE DOCUMENTS WITH OTHER DISCIPLINES AND NOTIFY THROUGH RFI PROCESS WHERE CONFLICTS OR REDUNDANCY MAY OCCUR.
6. VERIFY LOCATION OF FLOOR BOXES WITH ARCHITECT/OWNER REPRESENTATIVE PRIOR TO INSTALLATION.
7. NOTIFY ARCHITECT OF THE INTENT TO CLOSE WALLS AND CEILINGS, A MINIMUM OF FIVE WORKING DAYS PRIOR TO CLOSURE, AND REQUEST SITE OBSERVATIONS FOR EACH DISCIPLINE AFFECTED.
8. UNLESS OTHERWISE PROVIDED IN ARCHITECTURAL, STRUCTURAL, OR TECHNOLOGY DRAWINGS, PROVIDE TECHNOLOGY DEVICE STRUCTURAL ATTACHMENT DETAIL SHOP DRAWINGS PREPARED, STAMPED, AND SIGNED BY A STRUCTURAL ENGINEER LICENSED IN THE PROJECT JURISDICTION.

AC POWER & GROUNDING

1. AC POWER CIRCUITS AND RECEPTACLES ARE SHOWN FOR REFERENCE ONLY. SEE ELECTRICAL DRAWINGS FOR SCOPE-OF-WORK AND SPECIFIC CIRCUIT ASSIGNMENTS. WHERE A CONFLICT EXISTS BETWEEN THE ELECTRICAL DRAWINGS AND THE TECHNOLOGY DRAWINGS, RECONCILE THROUGH RFI PROCESS.
2. MAINTAIN A MINIMUM 12-INCH SEPARATION BETWEEN TECHNOLOGY SIGNAL CONDUITS AND PARALLEL AC POWER CONDUITS. AC POWER CONDUITS CROSSING TECHNOLOGY SIGNAL CONDUITS SHOULD DO SO AT PERPENDICULAR ANGLES WITH A MINIMUM OF 1-INCH CLEARANCE.
3. LOCATE TECHNOLOGY INSTALLATIONS A MINIMUM OF 6 FEET AWAY FROM TRANSFORMERS, INVERTERS, AND MOTORS.
4. NO LOADS SUCH AS MOTORS, TRANSFORMERS, BALLASTED LIGHTING, OR UTILITY CIRCUITS SHALL BE SERVED BY AC POWER PANELS INTENDED FOR LOW-VOLTAGE TECHNOLOGY EQUIPMENT USE. NOTIFY THE ARCHITECT OR OWNER REPRESENTATIVE IN THE EVENT OF A CONFLICT WITH THE PANELBOARD SCHEDULE.

TECHNOLOGY GENERAL NOTES (cont'd):

5. BUS BAR SHALL BE BONDED TO BUILDING STRUCTURAL STEEL. REFER TO BONDING RISER DRAWING FOR ADDITIONAL GROUNDING AND BONDING INFORMATION.
6. INSTALL BONDING CONDUCTORS WITH AS FEW BENDS AS POSSIBLE. WHEN A BEND IS NECESSARY, THE BEND SHALL BE INSTALLED AS A GRADUAL BEND WITH NO SHARP ANGLES KINKING THE CONDUCTOR.

AUDIOVISUAL INFRASTRUCTURE NOTES:

1. AUDIOVISUAL EQUIPMENT AND ELECTRICAL OUTLETS ADJACENT TO AV JUNCTION BOXES SHALL BE SERVED BY 120-VOLT AC CIRCUITS, WHICH ARE DEDICATED SOLELY TO AV USE. ALL CIRCUITS SHALL HAVE DEDICATED GROUNDED CONDUCTORS (I.E. NO COMMON "ROUND-HOUSE NEUTRAL") AND INSULATED EQUIPMENT GROUNDING CONDUCTORS.
2. BOND AC POWER DISTRIBUTION PANELS SERVING AUDIOVISUAL SYSTEM SUB-PANELS TO BUILDING SERVICE GROUND WITH CONTINUOUS INSULATED LOW-IMPEDANCE WIRE.
3. ALL AV CONDUITS ARE TO BE 3/4-INCH UNLESS OTHERWISE NOTED. EXCEPT FOR NETWORK DATA CABLES INSTALLED FOR AV NETWORK CONNECTIVITY. FOR THESE DATA CABLES, REFER TO DEFAULT CONDUIT REQUIREMENTS IN CONDUIT AND BOX SECTION.
4. PROVIDE TWO RJ-45 TERMINATED NETWORK PORTS AT AV LOCATION WHERE DATA CONNECTIONS ARE INDICATED, UNLESS OTHERWISE NOTED.
5. VERIFY THAT AUDIOVISUAL EQUIPMENT RACKS IN CLOSETS AND MILLWORK ARE PROPERLY VENTILATED.
6. UNLESS OTHERWISE PROVIDED IN ARCHITECTURAL, STRUCTURAL, OR AUDIOVISUAL DRAWINGS, PROVIDED TECHNOLOGY DEVICE STRUCTURAL ATTACHMENT DETAIL SHOP DRAWINGS PREPARED, STAMPED, AND SIGNED BY A STRUCTURAL ENGINEER LICENSED IN THE PROJECT JURISDICTION.
7. SEE PROJECT SPECIFICATIONS FOR REQUIREMENTS FOR PROJECTION SCREENS, PROJECTOR LIFTS, AND PROJECTOR MOUNTS.
8. AV CONDUITS SHALL BE TERMINATED WITH JUNCTION BOXES, PULL-BOXES, OR TERMINAL CABINETS AT BOTH ENDS, UNLESS OTHERWISE NOTED. CONDUITS TERMINATED AS "STUBS" SHOULD BE DE-BURRED AND FITTED WITH BUSHINGS.
9. PROVIDE QUANTITIES OF ALS RECEIVERS AND PORTION THEREOF EQUIPPED WITH HEARING-AID COMPATIBLE INDUCTIVE LOOPS AS REQUIRED BY THE LOCAL APPLICABLE BUILDING CODE AND ADA AS INTERPRETED BY THE PROJECT AHJ.

AUDIOVISUAL SYMBOLS:

TAG

FUNCTIONAL CONVENTIONS:

DISPLAY SIZE / 60" / INTEGRATED SPEAKER	VIDEO DISPLAY
SPEAKER LOCATION / RATED WATTS / TAP VALUE / LOCATION / IMPEDANCE TRANSFORMER	SPEAKER, HIGH-IMPEDANCE SYSTEM
DETAIL NUMBER / A	REFERENCE WITHIN A SHEET
DETAIL NUMBER / 1 / AV-601 / ON SHEET NUMBER	REFERENCE FROM OTHER SHEET
DETAIL NUMBER / 2 / AV-601 / ON SHEET NUMBER	REFERENCE TO OTHER SHEET
CONNECTOR TYPE / XLR	MALE CONNECTOR
CONNECTOR TYPE / XLR	FEMALE CONNECTOR

TA SHEET INDEX

SHEET NUMBER	SHEET NAME
TA-000	ELECTRICAL FOR AUDIOVISUAL NOTES AND LEGENDS
TA-121	LEVEL 1 OVERALL PLAN - PHASE 1
TA-122	LEVEL 1 OVERALL PLAN - PHASE 2
TA-171	LEVEL 1 REFLECTED CEILING PLAN - PHASE 1
TA-172	LEVEL 1 REFLECTED CEILING PLAN - PHASE 2
TA-201	ELEVATIONS & SECTIONS
TA-501	DETAILS
TA-502	DETAILS
TA-601	AUDIOVISUAL LINE DIAGRAMS

Grand total: 9

FUNCTIONAL SYMBOLS:

TRANSMITTER, WIRELESS DEVICE

RECEIVER, WIRELESS DEVICE

INPUT RECEPTACLE FACEPLATE

OUTPUT RECEPTACLE FACEPLATE

INPUT J-BOX (NO PLATE)

OUTPUT J-BOX (NO PLATE)

WIRE BUNDLE

EXAMPLE 1:

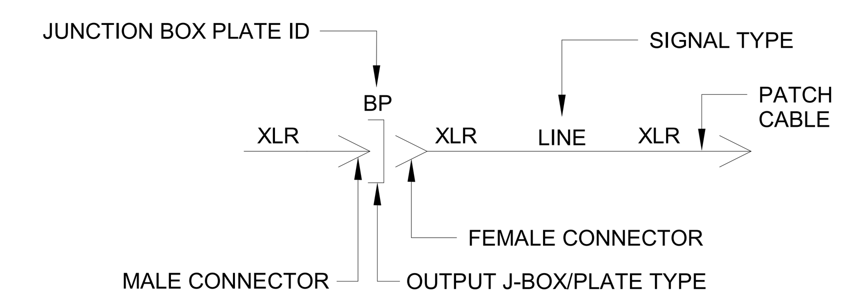

EXAMPLE 2:

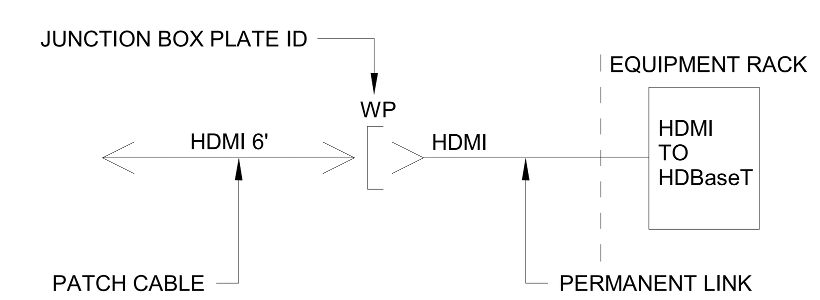

ELECTRICAL POWER AND CONDUIT SYMBOLS:

DOUBLE DUPLEX PLACEHOLDER FOR POWER. REFER TO ELECTRICAL DOCUMENTS FOR SPECIFICS.

DUPLEX PLACEHOLDER FOR POWER. REFER TO ELECTRICAL DOCUMENTS FOR SPECIFICS.

SPECIAL PURPOSE PLACEHOLDER FOR POWER. REFER TO ELECTRICAL DOCUMENTS FOR SPECIFICS.

CONDUIT, UNDERGROUND OR UNDERSLAB

CONDUIT, TURNED UP

CONDUIT, TURNED DOWN

AGENCY APPROVAL STAMP:

IDENTIFICATION STAMP
DIV. OF THE STATE ARCHITECT
APP: 01-120890 INC:
REVIEWED FOR
SS ☑ FLS ☑ ACS ☑
DATE: 10/25/2023

TLCDARCHITECTURE
520 Third St. #250
Santa Rosa, CA 95401
o: 707.525.5600
f: 707.525.5616
tlcd.com

CONSULTANT:

Salter
Acoustics
Audiovisual
Telecommunications
Security
130 Sutter Street, 5th Floor
San Francisco, CA 94104
Tel: 415.397.0442
salter-inc.com
Proj.#: 22-0110

STAMP:

REGISTERED PROFESSIONAL ENGINEER
KENNETH W. GRAVEN
06-30-2024
E15135
ELECTRICAL
STATE OF CALIFORNIA

REVISIONS:

Number	Date	Description
6	08-31-2023	100% CD
7	10-12-2023	V3

THE WINE SPECTATOR WINE EDUCATION COMPLEX AT NAPA VALLEY COLLEGE

2277 NAPA VALLEJO HWY
NAPA, CA 94558

NAPA VALLEY COLLEGE

DSA APPLICATION NUMBER:
01-120890

TLCD PROJECT NUMBER:
21062.00

DATE:
08-30-2023

ELECTRICAL FOR AUDIOVISUAL NOTES AND LEGENDS

TA-000

© THESE DRAWINGS ARE INSTRUMENTS OF SERVICE AND ARE THE SOLE PROPERTY OF TLCD ARCHITECTURE; ANY USE WITHOUT WRITTEN CONSENT IS PROHIBITED.

THESE DRAWINGS CONSTITUTE PROPRIETARY INFORMATION AND ARE THE PROPERTY OF CHARLES M. SALTER ASSOCIATES, INC. THE USE OF THIS INFORMATION IS LIMITED TO THIS PROJECT AND CANNOT BE DUPLICATED IN WHOLE OR IN PART, NOR DISCLOSED TO OTHERS, WITHOUT THE WRITTEN CONSENT OF CHARLES M. SALTER ASSOCIATES, INC. © 2022

10/12/2023 3:04:02 PM

AV BOX SCHEDULE - OVERALL PLAN PHASE 1

	DIVISION 26									DIVISION 27	
Tag	MAKE/MODEL (OR APPROVED EQUAL)	BOX SIZE (HxWxD) / GANG SIZE	COVER/RING	BOX LOCATION	MOUNTING HEIGHT	MOUNTING DEPTH	ADJACENT/INTEGRAL POWER REQUIREMENTS	ELECTRICAL NOTES	FUNCTION (BY AVC)	AV PLATE TYPE (BY AVC)	BY STRUCTURED CABLING CONTRACTOR*
CAM											NONE
DP	CHIEF MFG PAC 501	30" X 20" X 4"	NONE	WALL	REFER TO ELEVATIONS	FLUSH	INTERNAL DOUBLE DUPLEX	ANTICIPATED 7A LOAD 1-1/4" CONDUIT TO ER BOX	DISPLAY PANEL	CUSTOM	(2) NETWORK DROPS, INTERNAL
ER	NEMA 1	12"x12"x4"	SCREW COVER	INSIDE BACK PANEL OF MILLWORK CABINET	+18"AFF	FLUSH	ADJACENT DOUBLE DUPLEX		EQUIPMENT RACK BACKBOX	CUSTOM	(6) NETWORK DROPS, ADJACENT

KEYNOTE LEGEND

Key Value	Keynote Text
1	AV EQUIPMENT RACK INTEGRAL TO INSTRUCTOR STATION MILLWORK. CONDUITS STUP UP INTO MILLWORK 12"X12"X4" NEMA BOX "ER" WITHIN CABINET AT THE REAR.
2	80" LCD DISPLAY (FUTURE DISTRICT-FURNISHED FOR REMOTE LEARNING).
3	98" FLAT PANEL DISPLAYS.

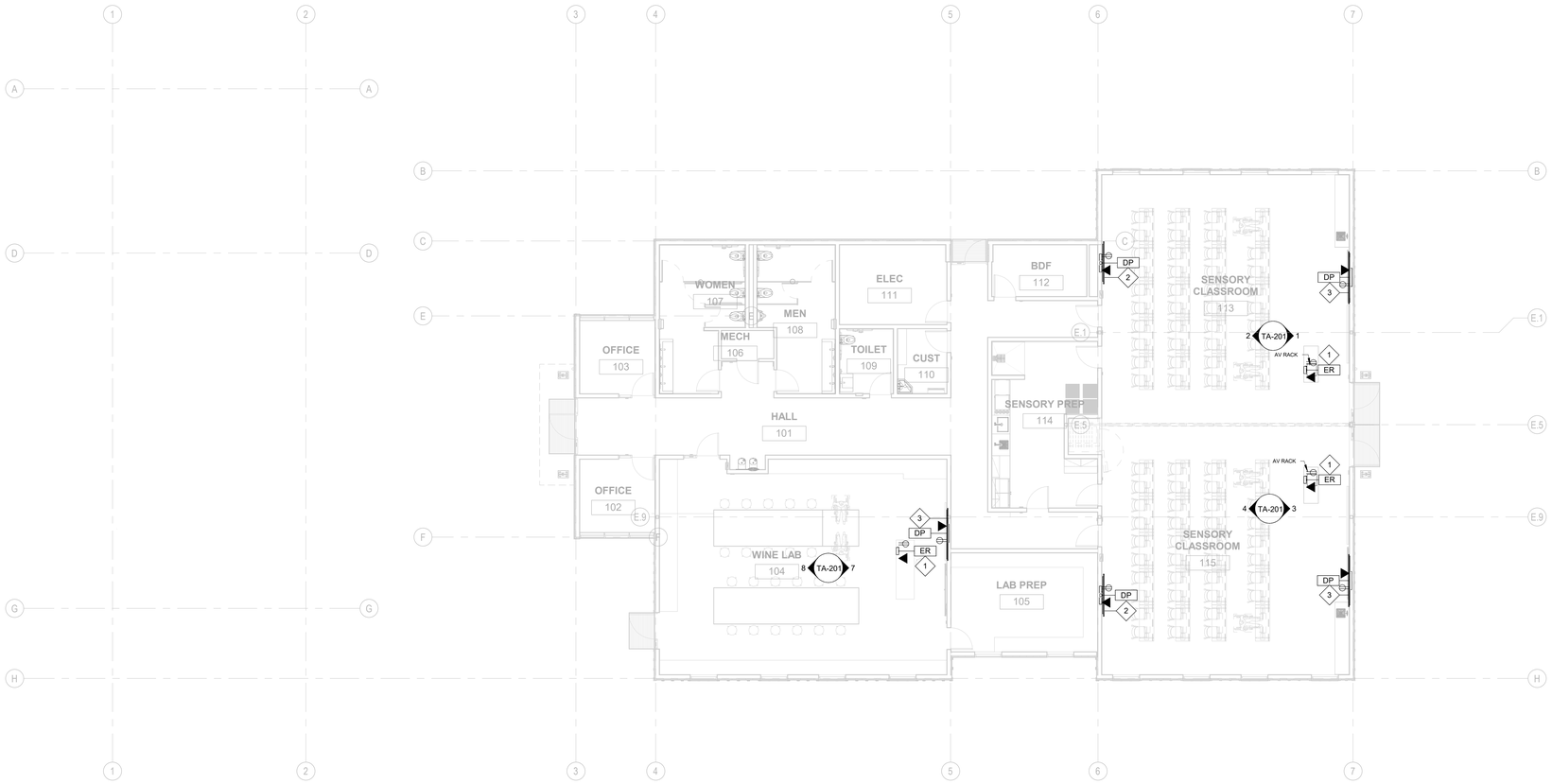

1 LEVEL 1
1/8" = 1'-0"

AGENCY APPROVAL STAMP:

IDENTIFICATION STAMP
DIV. OF THE STATE ARCHITECT
APP: 01-120890 INC:
REVIEWED FOR
SS ☑ FLS ☑ ACS ☑
DATE: 10/25/2023

TLCDARCHITECTURE

520 Third St. #250
Santa Rosa, CA 95401
o: 707.525.5600
f: 707.525.5616
tlcd.com

CONSULTANT:

Salter
Acoustics
Audiovisual
Telecommunications
Security

130 Sutter Street, 5th Floor
San Francisco, CA 94104
Tel: 415.397.0442
salter-inc.com
Proj.#: 22-0110

STAMP:

REGISTERED PROFESSIONAL ENGINEER
MARTIN M. GREGG
06-30-2024
E15135
ELECTRICAL
STATE OF CALIFORNIA

REVISIONS:

Number	Date	Description
6	08-31-2023	100% CD
7	10-12-2023	V3

THE WINE SPECTATOR WINE EDUCATION COMPLEX AT NAPA VALLEY COLLEGE

2277 NAPA VALLEJO HWY
NAPA, CA 94558

NAPA VALLEY COLLEGE

DSA APPLICATION NUMBER:
01-120890

TLCD PROJECT NUMBER:
21062.00

DATE:
08-30-2023

LEVEL 1 OVERALL PLAN - PHASE 1

TA-121

THESE DRAWINGS CONSTITUTE PROPRIETARY INFORMATION AND ARE THE PROPERTY OF CHARLES M. SALTER ASSOCIATES, INC. THE USE OF THIS INFORMATION IS LIMITED TO THIS PROJECT AND CANNOT BE DUPLICATED IN WHOLE OR IN PART, NOR DISCLOSED TO OTHERS, WITHOUT THE WRITTEN CONSENT OF CHARLES M. SALTER ASSOCIATES, INC. © 2022

10/12/2023 3:04:04 PM

© THESE DRAWINGS ARE INSTRUMENTS OF SERVICE AND ARE THE SOLE PROPERTY OF TLCD ARCHITECTURE. ANY USE WITHOUT WRITTEN CONSENT IS PROHIBITED.

KEYNOTE LEGEND	
Key Value	Keynote Text
1	98" FLAT PANEL DISPLAYS.

AV BOX SCHEDULE - OVERALL PLAN PHASE 1

	DIVISION 26										DIVISION 27
Tag	MAKE/MODEL (OR APPROVED EQUAL)	BOX SIZE (HxWxD) / GANG SIZE	COVER/RING	BOX LOCATION	MOUNTING HEIGHT	MOUNTING DEPTH	ADJACENT/INTEGRAL POWER REQUIREMENTS	ELECTRICAL NOTES	FUNCTION (BY AVC)	AV PLATE TYPE (BY AVC)	BY STRUCTURED CABLING CONTRACTOR*
AV1	RACO 260	4-11/16" SQUARE, 3-1/4" DEEP	NONE	WALL	+18"AFF	FLUSH	ADJACENT DOUBLE DUPLEX		AUDIOVISUAL I/O	CUSTOM	(2) NETWORK DROPS, ADJACENT
DP	CHIEF MFG PAC 501	30" X 20" X 4"	NONE	WALL	REFER TO ELEVATIONS	FLUSH	INTERNAL DOUBLE DUPLEX	ANTICIPATED 7A LOAD 1-1/4" CONDUIT TO ER BOX	DISPLAY PANEL	CUSTOM	(2) NETWORK DROPS, INTERNAL

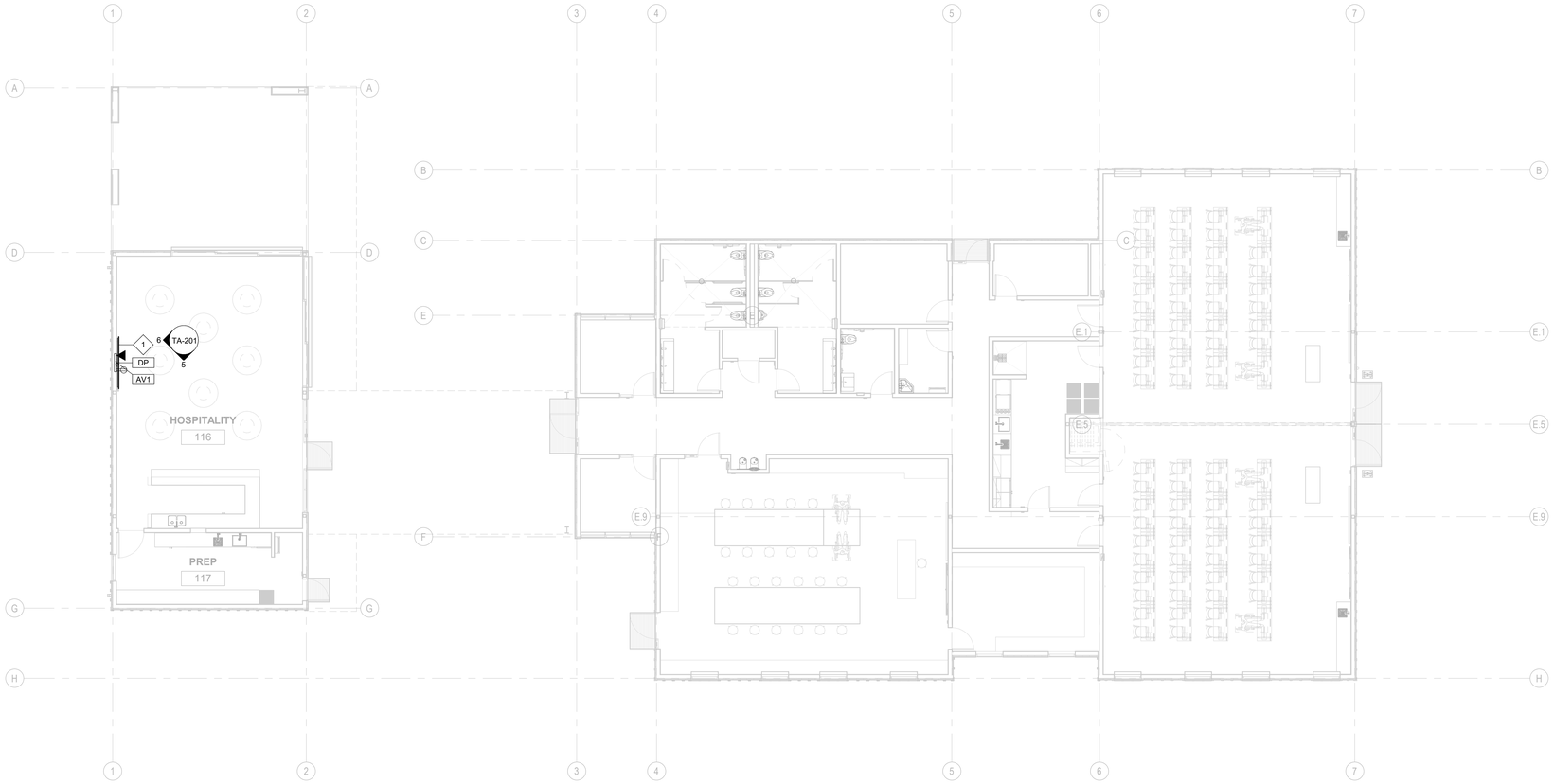

1 LEVEL 1 - PHASE 2
1/8" = 1'-0"

THESE DRAWINGS CONSTITUTE PROPRIETARY INFORMATION AND ARE THE PROPERTY OF CHARLES M. SALTER ASSOCIATES, INC. THE USE OF THIS INFORMATION IS LIMITED TO THIS PROJECT AND CANNOT BE DUPLICATED IN WHOLE OR IN PART, NOR DISCLOSED TO OTHERS, WITHOUT THE WRITTEN CONSENT OF CHARLES M. SALTER ASSOCIATES, INC. © 2022

10/12/2023 3:04:07 PM

AGENCY APPROVAL STAMP:

IDENTIFICATION STAMP
DIV. OF THE STATE ARCHITECT
APP: 01-120890 INC:
REVIEWED FOR
SS ☑ FLS ☑ ACS ☑
DATE: 10/25/2023

TLCDARCHITECTURE
520 Third St. #250
Santa Rosa, CA 95401
o: 707.525.5600
f: 707.525.5616
tlcd.com

CONSULTANT:

Salter
Acoustics
Audiovisual
Telecommunications
Security
130 Sutter Street, 5th Floor
San Francisco, CA 94104
Tel: 415.397.0442
salter-inc.com
Proj.#: 22-0110

STAMP:

REGISTERED PROFESSIONAL ENGINEER
KENNETH W. BRUNDAGE
06-30-2024
E16125
ELECTRICAL
STATE OF CALIFORNIA

REVISIONS:

Number	Date	Description
6	08-31-2023	100% CD
7	10-12-2023	V3

THE WINE SPECTATOR WINE EDUCATION COMPLEX AT NAPA VALLEY COLLEGE

2277 NAPA VALLEJO HWY
NAPA, CA 94558

NAPA VALLEY COLLEGE

DSA APPLICATION NUMBER:
01-120890

TLCD PROJECT NUMBER:
21062.00

DATE:
08-30-2023

LEVEL 1 OVERALL PLAN - PHASE 2

TA-122

© THESE DRAWINGS ARE INSTRUMENTS OF SERVICE AND ARE THE SOLE PROPERTY OF TLCD ARCHITECTURE. ANY USE WITHOUT WRITTEN CONSENT IS PROHIBITED.

AV BOX SCHEDULE - RCP (PHASE 1)

	DIVISION 26										DIVISION 27	
Tag	MAKE/MODEL (OR APPROVED EQUAL)	BOX SIZE (HxWxD) / GANG SIZE	COVER/RING	BOX LOCATION	MOUNTING HEIGHT	MOUNTING DEPTH	ADJACENT/INTEGRAL POWER REQUIREMENTS	ELECTRICAL NOTES	FUNCTION (BY AVC)	AV PLATE TYPE (BY AVC)	BY STRUCTURED CABLING CONTRACTOR*	AV BOX COMMENTS
MIC	RACO 260	4-11/16" SQUARE, 3-1/4" DEEP	1-GANG TRIM RING	SURFACE MOUNT TO DECK ABOVE	DECK	SURFACE	NONE		MICROPHONE	CUSTOM	NONE	RCP
S2		N.I.C., BY AVC.	N.I.C., BY AVC.	ACCESSIBLE CEILING	N.I.C., BY AVC.	N.I.C., BY AVC.	N.I.C., BY AVC.	N.I.C., BY AVC.	ACCESSIBLE CEILING LOUDSPEAKER	N.I.C., BY AVC.	N.I.C., BY AVC.	RCP

KEYNOTE LEGEND

Key Value	Keynote Text
1	CEILING LOUDSPEAKER NOT IN CONTRACT, BY AVC. CONDUIT STUB UP FROM EQUIPMENT RACK TO ACCESSIBLE CEILING.

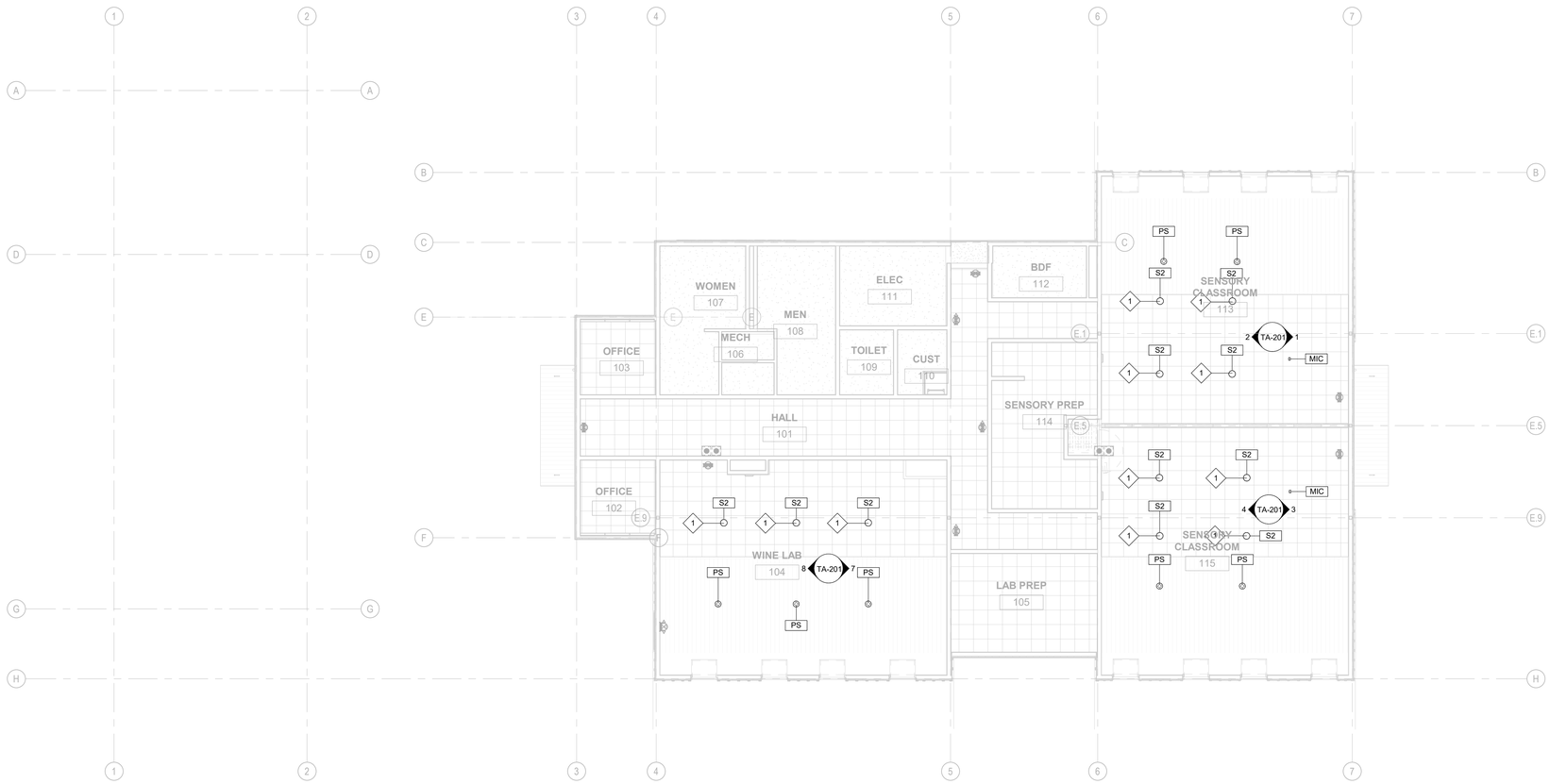

1 LEVEL 1 REFLECTED CEILING PLAN
1/8" = 1'-0"

THESE DRAWINGS CONSTITUTE PROPRIETARY INFORMATION AND ARE THE PROPERTY OF CHARLES M. SALTER ASSOCIATES, INC. THE USE OF THIS INFORMATION IS LIMITED TO THIS PROJECT AND CANNOT BE DUPLICATED IN WHOLE OR IN PART, NOR DISCLOSED TO OTHERS, WITHOUT THE WRITTEN CONSENT OF CHARLES M. SALTER ASSOCIATES, INC. © 2022

10/12/2023 3:04:08 PM

AGENCY APPROVAL STAMP:

IDENTIFICATION STAMP
DIV. OF THE STATE ARCHITECT
APP: 01-120890 INC:
REVIEWED FOR
SS ☑ FLS ☑ ACS ☑
DATE: 10/25/2023

TLCDARCHITECTURE
520 Third St. #250
Santa Rosa, CA 95401
o: 707.525.5600
f: 707.525.5616
tlcd.com

CONSULTANT:

Salter
Acoustics
Audiovisual
Telecommunications
Security
130 Sutter Street, 5th Floor
San Francisco, CA 94104
Tel: 415.397.0442
salter-inc.com
Proj.#: 22-0110

STAMP:

REGISTERED PROFESSIONAL ENGINEER
ROBERT W. BRAUN
06-30-2024
E-18125
ELECTRICAL
STATE OF CALIFORNIA

REVISIONS:

Number	Date	Description
6	08-31-2023	100% CD
7	10-12-2023	V3

THE WINE SPECTATOR WINE EDUCATION COMPLEX AT NAPA VALLEY COLLEGE

2277 NAPA VALLEJO HWY
NAPA, CA 94558

NAPA VALLEY COLLEGE

DSA APPLICATION NUMBER:
01-120890

TLCD PROJECT NUMBER:
21062.00

DATE:
08-30-2023

LEVEL 1 REFLECTED CEILING PLAN - PHASE 1

TA-171

© THESE DRAWINGS ARE INSTRUMENTS OF SERVICE AND ARE THE SOLE PROPERTY OF TLCD ARCHITECTURE. ANY USE WITHOUT WRITTEN CONSENT IS PROHIBITED.

KEYNOTE LEGEND

Key Value	Keynote Text

AV BOX SCHEDULE - RCP (PHASE 2)

	DIVISION 26									DIVISION 27		
Tag	MAKE/MODEL (OR APPROVED EQUAL)	BOX SIZE (HxWxD) / GANG SIZE	COVER/RING	BOX LOCATION	MOUNTING HEIGHT	MOUNTING DEPTH	ADJACENT/INTEGRAL POWER REQUIREMENTS	ELECTRICAL NOTES	FUNCTION (BY AVC)	AV PLATE TYPE (BY AVC)	BY STRUCTURED CABLING CONTRACTOR*	AV BOX COMMENTS

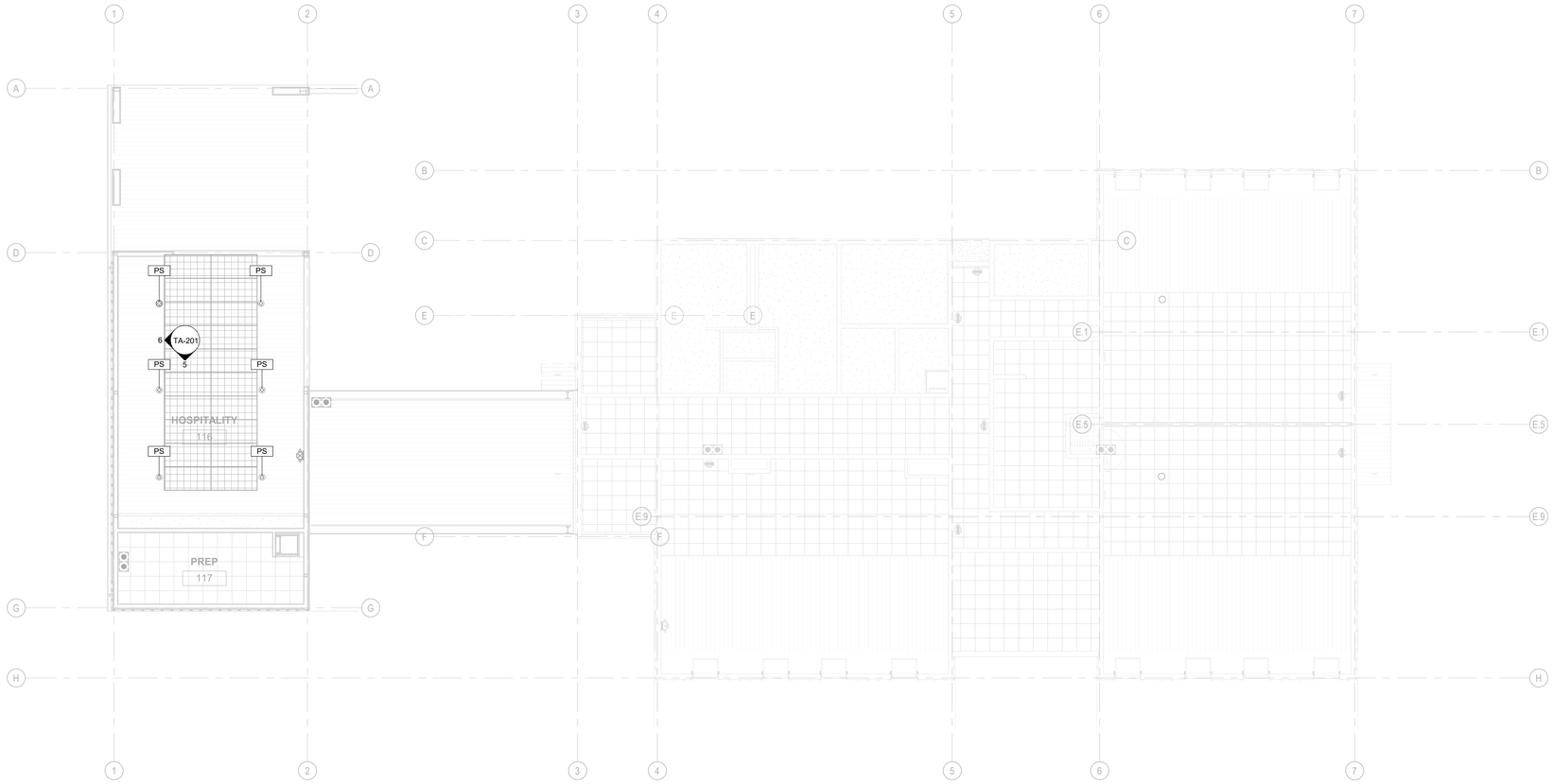

1 LEVEL 1 REFLECTED CEILING PLAN
1/8" = 1'-0"

THESE DRAWINGS CONSTITUTE PROPRIETARY INFORMATION AND ARE THE PROPERTY OF CHARLES M. SALTER ASSOCIATES, INC. THE USE OF THIS INFORMATION IS LIMITED TO THIS PROJECT AND CANNOT BE DUPLICATED IN WHOLE OR IN PART, NOR DISCLOSED TO OTHERS, WITHOUT THE WRITTEN CONSENT OF CHARLES M. SALTER ASSOCIATES, INC. © 2022

10/12/2023 3:04:09 PM

AGENCY APPROVAL STAMP:

IDENTIFICATION STAMP
DIV. OF THE STATE ARCHITECT
APP: 01-120890 INC:
REVIEWED FOR
SS ☑ FLS ☑ ACS ☑
DATE: 10/25/2023

TLCDARCHITECTURE
520 Third St. #250
Santa Rosa, CA 95401
o: 707.525.5600
f: 707.525.5616
tlcd.com

CONSULTANT:

Salter
Acoustics
Audiovisual
Telecommunications
Security
130 Sutter Street, 5th Floor
San Francisco, CA 94104
Tel: 415.397.0442
salter-inc.com
Proj.#: 22-0110

STAMP:

REGISTERED PROFESSIONAL ENGINEER
MARTIN W. GERBER
06-30-2024
E15135
ELECTRICAL
STATE OF CALIFORNIA

REVISIONS:

Number	Date	Description
6	08-31-2023	100% CD
7	10-12-2023	V3

THE WINE SPECTATOR WINE EDUCATION COMPLEX AT NAPA VALLEY COLLEGE

2277 NAPA VALLEJO HWY
NAPA, CA 94558

NAPA VALLEY COLLEGE

DSA APPLICATION NUMBER:
01-120890

TLCD PROJECT NUMBER:
21062.00

DATE:
08-30-2023

LEVEL 1 REFLECTED CEILING PLAN - PHASE 2

TA-172

© THESE DRAWINGS ARE INSTRUMENTS OF SERVICE AND ARE THE SOLE PROPERTY OF TLCD ARCHITECTURE. ANY USE WITHOUT WRITTEN CONSENT IS PROHIBITED.

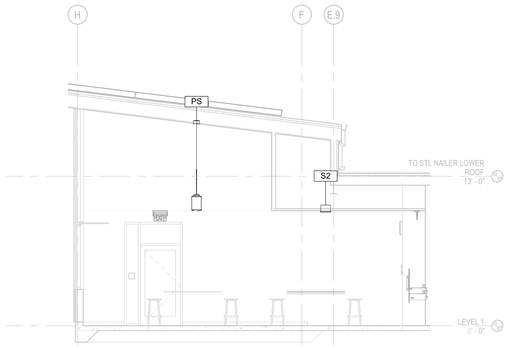

8 VIT LAB 108 REAR WALL
3/16" = 1'-0"

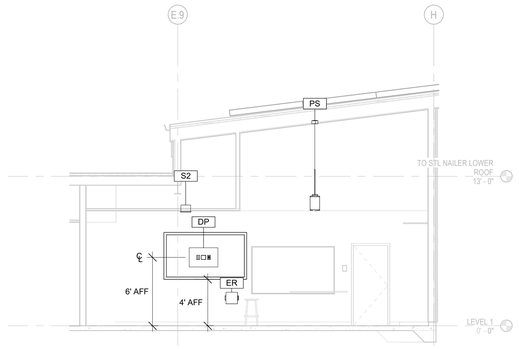

7 VIT LAB 108 INSTRUCTOR WALL
3/16" = 1'-0"

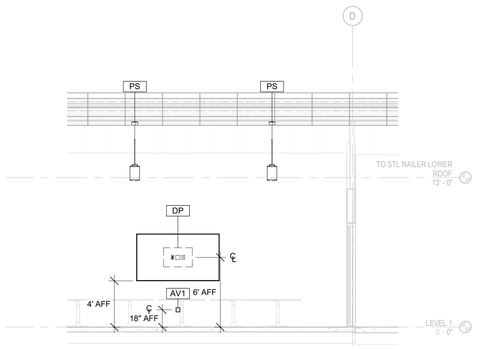

6 HOSPITALITY 116 REAR WALL
3/16" = 1'-0"

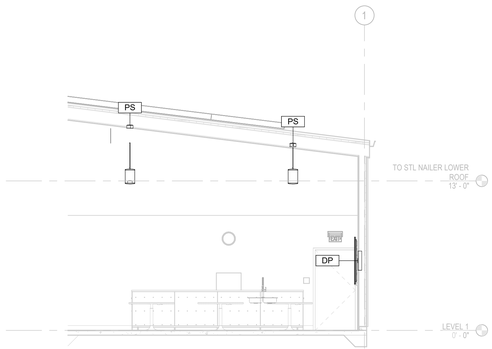

5 HOSPITALITY 116 INSTRUCTOR WALL
3/16" = 1'-0"

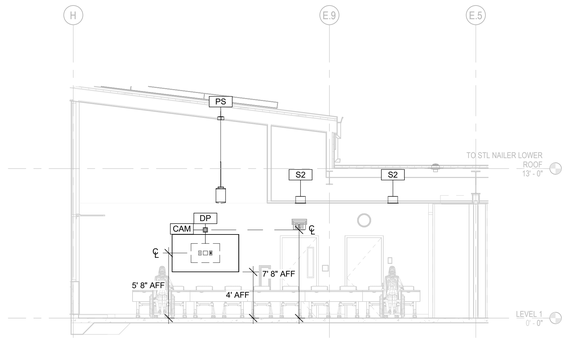

4 SENSORY CLASSROOM 120 REAR WALL
3/16" = 1'-0"

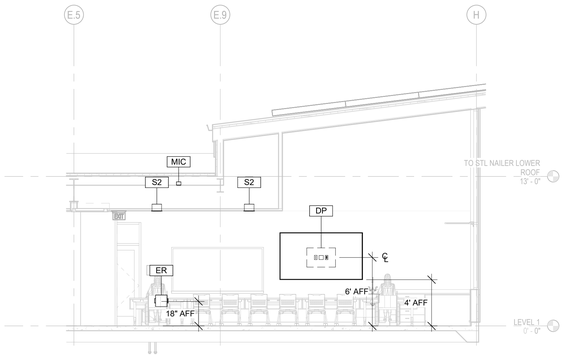

3 SENSORY CLASSROOM 120 INSTRUCTOR WALL
3/16" = 1'-0"

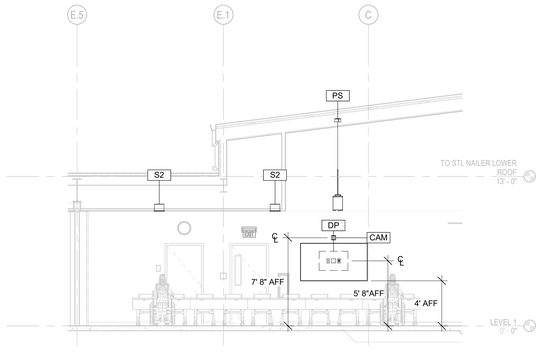

2 SENSORY CLASSROOM 118 REAR WALL
3/16" = 1'-0"

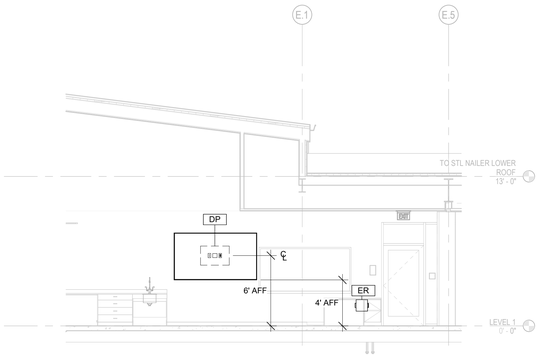

1 SENSORY CLASSROOM 118 INSTRUCTOR WALL ELEVATION
3/16" = 1'-0"

AGENCY APPROVAL STAMP:

IDENTIFICATION STAMP
DIV. OF THE STATE ARCHITECT
APP: 01-120890 INC:
REVIEWED FOR
SS ☑ FLS ☑ ACS ☑
DATE: 10/25/2023

TLCDARCHITECTURE
520 Third St. #250
Santa Rosa, CA 95401
o: 707.525.5600
f: 707.525.5616
tlcd.com

CONSULTANT:
Salter
Acoustics
Audiovisual
Telecommunications
Security
130 Sutter Street, 5th Floor
San Francisco, CA 94104
Tel: 415.397.0442
salter-inc.com
Proj.#: 22-0110

STAMP:

REVISIONS:

Number	Date	Description
6	08-31-2023	100% CD
7	10-12-2023	V3

THE WINE SPECTATOR WINE EDUCATION COMPLEX AT NAPA VALLEY COLLEGE

2277 NAPA VALLEJO HWY
NAPA, CA 94558

NAPA VALLEY COLLEGE

DSA APPLICATION NUMBER:
01-120890

TLCD PROJECT NUMBER:
21062.00

DATE:
08-30-2023

ELEVATIONS & SECTIONS

TA-201

THESE DRAWINGS CONSTITUTE PROPRIETARY INFORMATION AND ARE THE PROPERTY OF CHARLES M. SALTER ASSOCIATES, INC. THE USE OF THIS INFORMATION IS LIMITED TO THIS PROJECT AND CANNOT BE DUPLICATED IN WHOLE OR IN PART, NOR DISCLOSED TO OTHERS, WITHOUT THE WRITTEN CONSENT OF CHARLES M. SALTER ASSOCIATES, INC. © 2022

10/12/2023 3:04:12 PM

© THESE DRAWINGS ARE INSTRUMENTS OF SERVICE AND ARE THE SOLE PROPERTY OF TLCD ARCHITECTURE. ANY USE WITHOUT WRITTEN CONSENT IS PROHIBITED.

SHEET NOTE: STRUCTURAL CALL-OUTS IN ITALICS ARE BY ZFA STRUCTURAL ENGINEERS

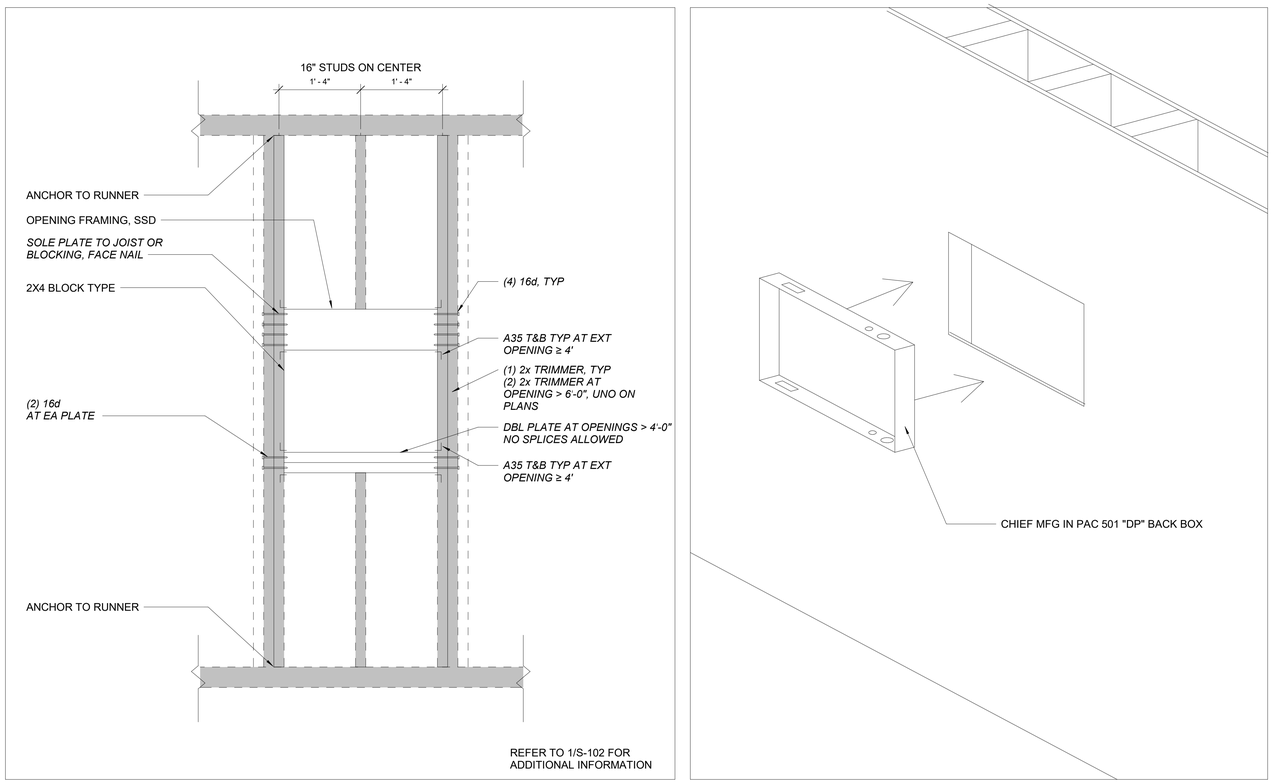

3 ROUGH-IN OPENING PAC501 INSTALLATION DETAIL
1" = 1'-0"

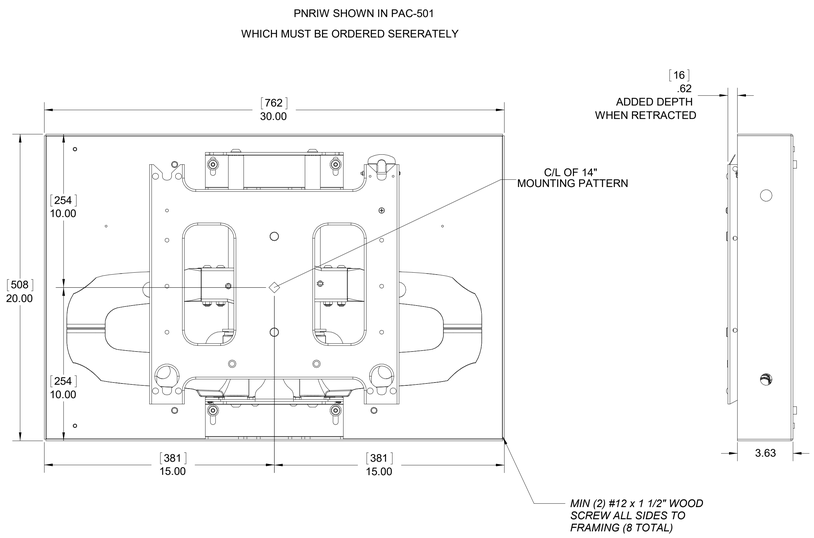

2 LARGE LOW-PROFILE IN-WALL SWING ARM MOUNT IN PAC 501 "DP" BACK BOX FOR 98" DISPLAY (200LBS)
NTS

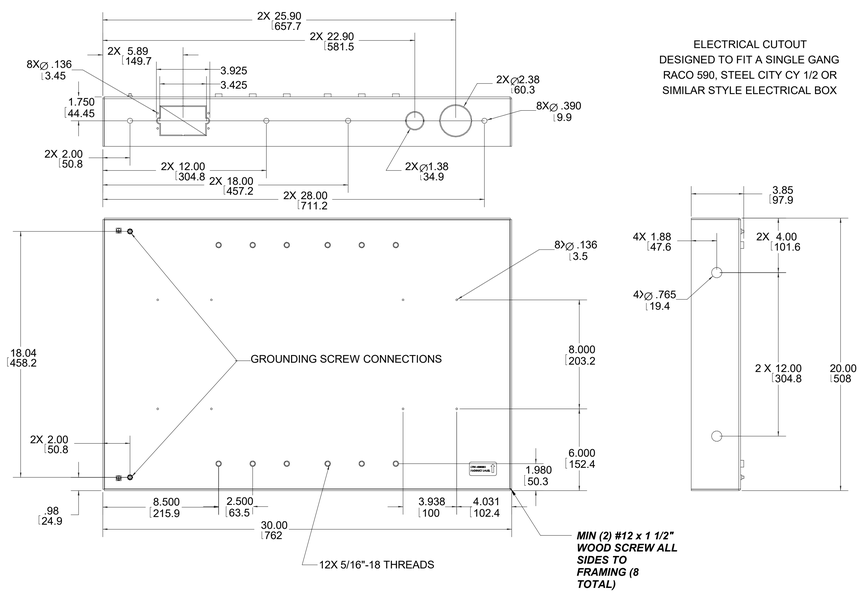

ELECTRICAL CUTOUT
DESIGNED TO FIT A SINGLE GANG
RACO 590, STEEL CITY CY 1/2 OR
SIMILAR STYLE ELECTRICAL BOX

1 PAC501 DISPLAY BACKBOX FOR 98" DISPLAY (200LBS)
NTS

AGENCY APPROVAL STAMP:

IDENTIFICATION STAMP
DIV. OF THE STATE ARCHITECT
APP: 01-120890 INC:
REVIEWED FOR
SS ☑ FLS ☑ ACS ☑
DATE: 10/25/2023

TLCDARCHITECTURE
520 Third St. #250
Santa Rosa, CA 95401
o: 707.525.5600
f: 707.525.5616
tlcd.com

CONSULTANT:
Salter
Acoustics
Audiovisual
Telecommunications
Security
130 Sutter Street, 5th Floor
San Francisco, CA 94104
Tel: 415.397.0442
salter-inc.com
Proj.#: 22-0110

STAMP:

REVISIONS:

Number	Date	Description
6	08-31-2023	100% CD
7	10-12-2023	V3

THE WINE SPECTATOR WINE EDUCATION COMPLEX AT NAPA VALLEY COLLEGE

2277 NAPA VALLEJO HWY
NAPA, CA 94558

NAPA VALLEY COLLEGE

DSA APPLICATION NUMBER:
01-120890

TLCD PROJECT NUMBER:
21062.00

DATE:
08-30-2023

DETAILS

TA-501

THESE DRAWINGS CONSTITUTE PROPRIETARY INFORMATION AND ARE THE PROPERTY OF CHARLES M. SALTER ASSOCIATES, INC. THE USE OF THIS INFORMATION IS LIMITED TO THIS PROJECT AND CANNOT BE DUPLICATED IN WHOLE OR IN PART, NOR DISCLOSED TO OTHERS, WITHOUT THE WRITTEN CONSENT OF CHARLES M. SALTER ASSOCIATES, INC. © 2022

10/12/2023 3:04:13 PM

© THESE DRAWINGS ARE INSTRUMENTS OF SERVICE AND ARE THE SOLE PROPERTY OF TLCD ARCHITECTURE. ANY USE WITHOUT WRITTEN CONSENT IS PROHIBITED.

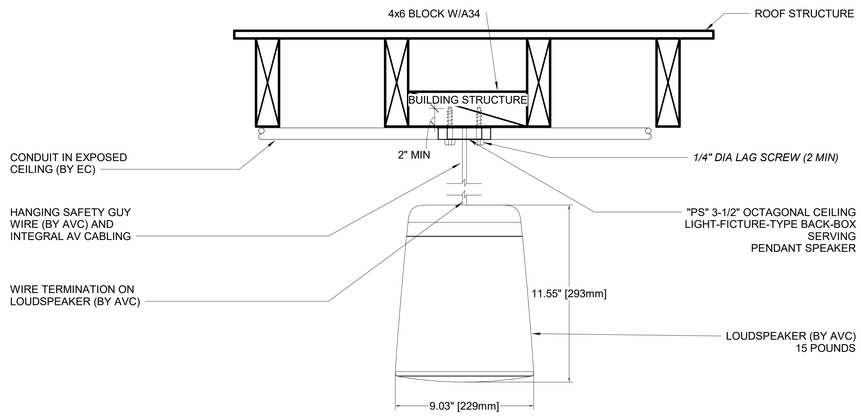

3 PENDANT LOUDSPEAKER MOUNTING
NTS

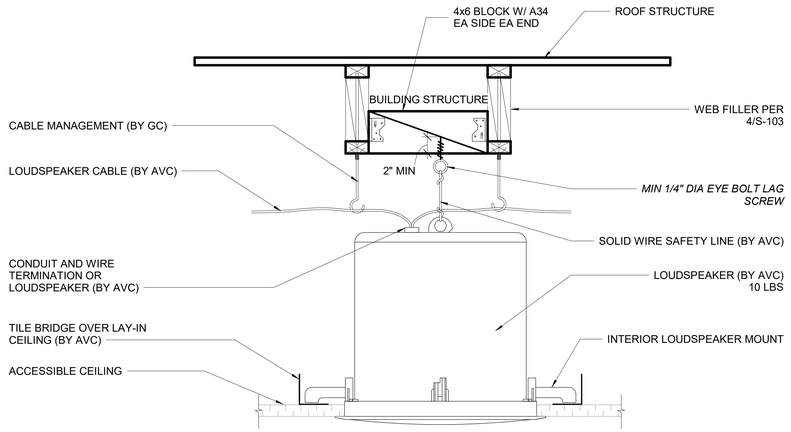

2 ACCESSIBLE CEILING LOUDSPEAKER TJI
NTS

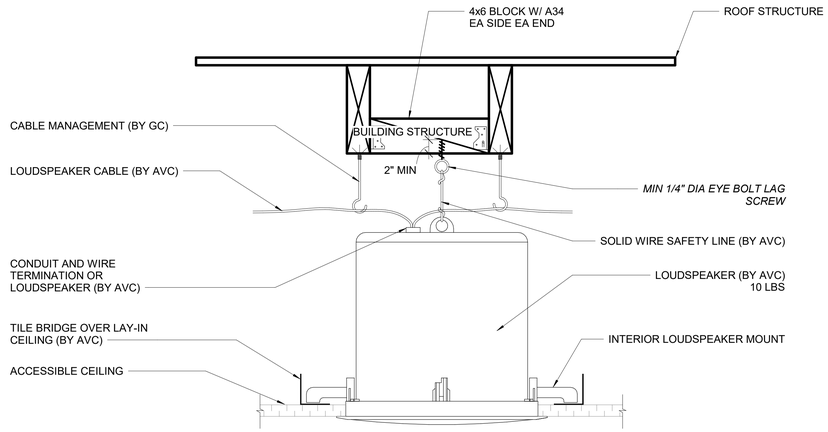

1 ACCESSIBLE CEILING LOUDSPEAKER
NTS

AGENCY APPROVAL STAMP:

IDENTIFICATION STAMP
DIV. OF THE STATE ARCHITECT
APP: 01-120890 INC:
REVIEWED FOR
SS ☑ FLS ☑ ACS ☑
DATE: 10/25/2023

TLCDARCHITECTURE
520 Third St. #250
Santa Rosa, CA 95401
o: 707.525.5600
f: 707.525.5616
tlcd.com

CONSULTANT:

Salter
Acoustics
Audiovisual
Telecommunications
Security
130 Sutter Street, 5th Floor
San Francisco, CA 94104
Tel: 415.397.0442
salter-inc.com
Proj.#: 22-0110

STAMP:

REVISIONS:

Number	Date	Description
6	08-31-2023	100% CD
7	10-12-2023	V3

THE WINE SPECTATOR WINE EDUCATION COMPLEX AT NAPA VALLEY COLLEGE

2277 NAPA VALLEJO HWY
NAPA, CA 94558

NAPA VALLEY COLLEGE

DSA APPLICATION NUMBER:
01-120890

TLCD PROJECT NUMBER:
21062.00

DATE:
08-30-2023

DETAILS

TA-502

THESE DRAWINGS CONSTITUTE PROPRIETARY INFORMATION AND ARE THE PROPERTY OF CHARLES M. SALTER ASSOCIATES, INC. THE USE OF THIS INFORMATION IS LIMITED TO THIS PROJECT AND CANNOT BE DUPLICATED IN WHOLE OR IN PART, NOR DISCLOSED TO OTHERS, WITHOUT THE WRITTEN CONSENT OF CHARLES M. SALTER ASSOCIATES, INC. © 2022

10/12/2023 3:04:13 PM

© THESE DRAWINGS ARE INSTRUMENTS OF SERVICE AND ARE THE SOLE PROPERTY OF TLCD ARCHITECTURE. ANY USE WITHOUT WRITTEN CONSENT IS PROHIBITED.

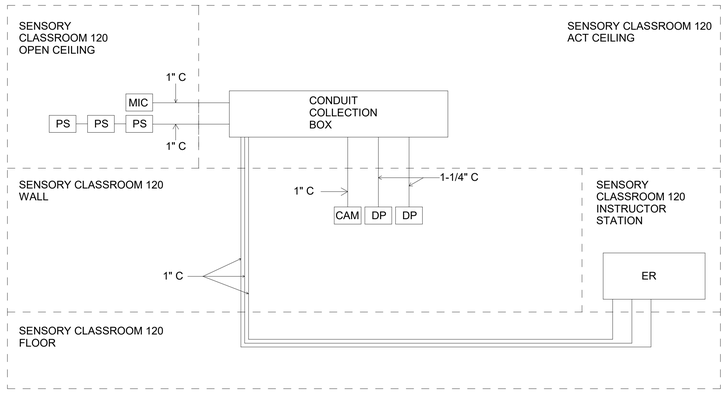

4 AUDIOVISUAL CONDUIT RISER - SENSORY CLASSROOM 120
NTS

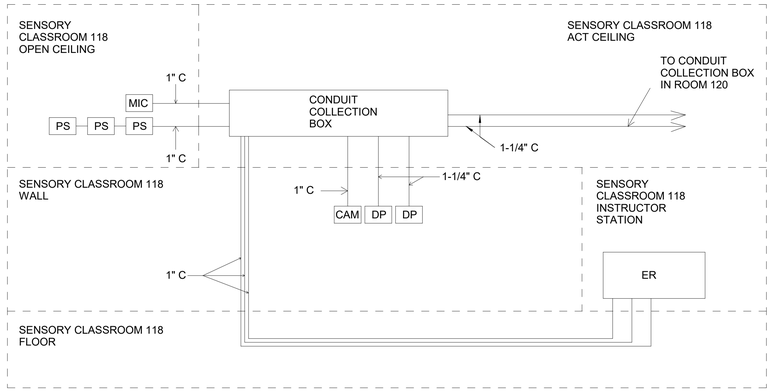

3 AUDIOVISUAL CONDUIT RISER - SENSORY CLASSROOM 118
NTS

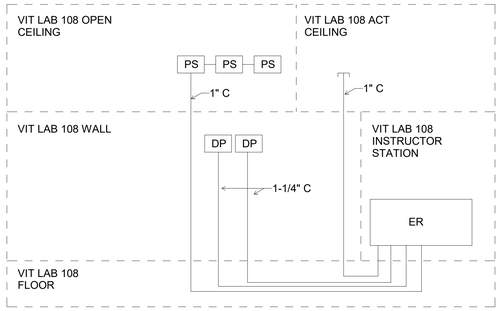

2 AUDIOVISUAL CONDUIT RISER - VIT LAB 108
NTS

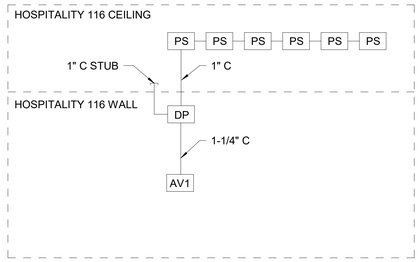

1 AUDIOVISUAL CONDUIT RISER - HOSPITALITY 116
NTS

AGENCY APPROVAL STAMP:

IDENTIFICATION STAMP
DIV. OF THE STATE ARCHITECT
APP: 01-120890 INC:
REVIEWED FOR
SS ☑ FLS ☑ ACS ☑
DATE: 10/25/2023

TLCDARCHITECTURE
520 Third St. #250
Santa Rosa, CA 95401
o: 707.525.5600
f: 707.525.5616
tlcd.com

CONSULTANT:

Salter
Acoustics
Audiovisual
Telecommunications
Security
130 Sutter Street, 5th Floor
San Francisco, CA 94104
Tel: 415.397.0442
salter-inc.com
Proj.#: 22-0110

STAMP:

REVISIONS:

Number	Date	Description
6	08-31-2023	100% CD
7	10-12-2023	V3

THE WINE SPECTATOR WINE EDUCATION COMPLEX AT NAPA VALLEY COLLEGE

2277 NAPA VALLEJO HWY
NAPA, CA 94558

NAPA VALLEY COLLEGE

DSA APPLICATION NUMBER:
01-120890

TLCD PROJECT NUMBER:
21062.00

DATE:
08-30-2023

AUDIOVISUAL LINE DIAGRAMS

TA-601

THESE DRAWINGS CONSTITUTE PROPRIETARY INFORMATION AND ARE THE PROPERTY OF CHARLES M. SALTER ASSOCIATES, INC. THE USE OF THIS INFORMATION IS LIMITED TO THIS PROJECT AND CANNOT BE DUPLICATED IN WHOLE OR IN PART, NOR DISCLOSED TO OTHERS, WITHOUT THE WRITTEN CONSENT OF CHARLES M. SALTER ASSOCIATES, INC. © 2022

10/12/2023 3:04:13 PM

© THESE DRAWINGS ARE INSTRUMENTS OF SERVICE AND ARE THE SOLE PROPERTY OF TLCD ARCHITECTURE. ANY USE WITHOUT WRITTEN CONSENT IS PROHIBITED.

NAPA VALLEY COLLEGE
WINE EDUCATION CENTER

2277 NAPA VALLEJO HWY, NAPA, CA 94558

LABORATORY FURNISHINGS DRAWINGS

LAB SYMBOLS LEGEND

- SK-X — CUPSINK — SINK TYPE, SEE LF SINK SCHEDULE
- SK-1 — SINK — SINK TYPE, SEE LF SINK SCHEDULE; X — FAUCET TYPE/WATER TYPE. SEE LF PLUMBING FIXTURE SCHEDULE
- 4CFH — FUME HOOD — FH TYPE, SEE FH SCHEDULE
- EQUIP, OFOI, TYP U.O.N. — # EQUIPMENT NUMBER SEE EQUIPMENT SCHEDULE
- FEC — FIRE EXTINGUISHER CABINET, SEE ARCHITECTURAL DRAWINGS
- EP — ELECTRICAL PANEL, SEE ALSO ELEC . DRAWINGS
- LAB COAT HOOKS
- DR-X — SINK DRYING RACK — DRYING RACK TYPE, SEE DRY RACK SCHEDULE
- ES/EW — RECESSED FOLD DOWN EYEWASH/SHOWER WITH CURTAIN — SHOWER HEAD SHOWN DASHED ABOVE; EW SHOWN DASHED IN OPEN POSITION; SHOWER CURTAIN
- —WM— TYPICAL DUAL CHANNEL ELEC/TELECOM WIREMOLD, +41" TO BOTTOM U.O.N., SEE ALSO ELEC DWGS
- 208V, 1 PHASE, 30A ELEC RECEPTACLE, SEE ALSO ELEC DWGS
- STANDARD 110V, 20A DUPLEX ELEC RECEPTACLE, +48" U.O.N., SEE ALSO ELEC DWGS
- D — 'D' INDICATES DEDICATED DUPLEX ELEC RECEPTACLE, +48" U.O.N., SEE ALSO ELEC DWGS
- EP — 'EP' INDICATES RECEPTACLE IS DUPLEX ON EMERGENCY POWER, +48" U.O.N., SEE ALSO ELEC DWGS
- WP — 'WP' INDICATES WATERPROOF DUPLEX ELEC RECEPTACLE, +48" U.O.N., SEE ALSO ELEC DWGS
- 110V QUADPLEX-ELEC RECEPTACLE, +48" U.O.N. SEE ALSO ELEC DWGS
- J — ELEC J-BOX (BLANK COVER OR FOR DIRECT CONNECTION OF EQUIPMENT), SEE ALSO ELEC DWGS
- TELECOM OUTLET (TCO), SEE ALSO ELEC AND TELECOM DWGS, +48" U.O.N.
- FD — FLOOR DRAIN, SEE ALSO PLUMBING DWGS.
- LIGHT SWITCH, SEE ALSO ELEC. DWGS.
- ACCESSIBLE HEIGHT WORKSURFACE 34" MAXIMUM TO HIGHEST POINT (INCLUDING TOP OF SINK EDGE)

LAB ABBREVIATIONS

ADA	AMERICAN DISABILITES ACT
ACFH	ACCESSIBLE CHEMICAL FUME HOOD
AFF	ABOVE FINISHED FLOOR
B	STANDING HEIGHT BASE CABINET
BSC	BIOLOGICAL SAFETY CABINET
CA	COMPRESSED LAB AIR (100 PSIG)
CBC	CALIFORNIA BUILDING CODE
CFM	CUBIC FEET/MINUTE
CFH	CHEMICAL FUME HOOD
CLR	CLEAR
CPVC	CHLORINATED POLYVINYL CHLORIDE
D	DEDICATED
DH	DRENCH HOSE
DIA	DIAMETER
DIV	DIVISION
DR	DRY RACK
E	EPOXY
ES	EMERGENCY SHOWER
EW	EYE WASH
FBC	FIRE BLANKET CABINET
FD	FLOOR DRAIN
FE	FIRE EXTINGUISHER
FEC	FIRE EXTERIOR CABINET
FP	FOOT PEDAL
FS	FLOOR SINK
FZR	FREEZER
GA	GAUGE
GC	GENERAL CONTRACTOR
H	STANDING HEIGHT SUSPENDED CABINET
HORIZ	HORIZONTAL
HB	HOSE BIBB
HD	HEAVY DUTY
IB	ISLAND BENCH
ICW	INDUSTRIAL COLD WATER - REQUIRES LOCAL BACK FLOW PREVENTERS
IHW	INDUSTRIAL HOT WATER - REQUIRES LOCAL BACK FLOW PREVENTERS
INC	INCUBATOR
IR	INFRARED SENSOR
LA	LABORATORY AIR (15 PSIG)
LF	LAB FURNISHINGS
LG	LABORATORY GAS
LG(2)	LABORATORY GAS -(2) OPPOSING VALVES
LG(2A)	LABORATORY GAS -(2) 90 VALVES
LV	LABORATORY VACUUM
MAX	MAXIMUM
MIN	MINIMUM
NLC	NO LOCKING CABINETS
NPS	NO PLUMBING SERVICES
O.C.	ON CENTER
OFCI	OWNER FURNISHED CONTRACTOR INSTALLED
OFOI	OWNER FURNISHED, OWNER INSTALLED
PD	PIPE DROP LOCATED
PW	PURIFIED WATER
REF	REFRIGERATOR
SIM	SIMILAR
SS	STAINLESS STEEL
T	TALL CABINET
TCO	TELECOM OUTLET
TYP	TYPICAL
UC	UNDER COUNTER
U.O.N.	UNLESS OTHERWISE NOTED
_(V)	SERVICE VALVE - PROVIDED UNDER DIV. 22
(VAV)	VARIABLE AIR VOLUME
(VB)	VACUUM BRAKER
W	WOOD
WC	WALL CABINET
WP	WATER PROOF
WS	WALL SHELVES

GENERAL NOTES

1. ALL WALL BENCHTOPS, MOBILE WORKSTATIONS AND MOVABLE TABLES SHALL BE 27" DEEP INCLUDING ALL BENCH BACK SPLASH (UNLESS OTHERWISE NOTED).
2. ALL ISLAND BENCHTOPS SHALL BE 54" DEEP (UNLESS OTHERWISE NOTED).
3. ALL BENCHES AND TABLES SHALL BE 36" HIGH (UNLESS OTHERWISE NOTED).
4. ALL BENCH AND MOVABLE TABLE WORK SURFACES TO BE 1" THICK EPOXY RESIN (UNLESS OTHERWISE NOTED).
5. ALL BACK AND SIDE SPLASHES TO BE 3/4" THICK AND 4" HIGH
6. PROVIDE BACK AND SIDE SPLASHES AT ALL BENCH TOPS AGAINST FUME HOODS AND/OR ADJACENT WALLS.
7. OVERALL LENGTH OF BENCHTOPS SHALL BE DETERMINATED BY CASEWORK SIZES AND DIMENSIONS AS INDICATED ON PLANS. TOPS SHALL OVERHANG 1" AT EACH END AND 1" FROM FRONT OF BASE CABINETS
8. ALL CASEWORK, FUME HOODS AND ANY OTHER FURNISHINGS WITH EXPOSED TO VIEW BACKS AND SIDES SHALL BE FINISHED.
9. INSTALL REMOVABLE KNEESPACE CLOSURE PANELS ALIGNED WITH BACK OF WALL CABINETS AND FLUSH REMOVABLE CLOSURE PANELS BETWEEN WALS AT EXPOSED SIDES OF BASE CABINETS. CLOSURE PANELS SHALL BE REMOVABLE WITHOUT NEED TO REMOVE RESILIENT BASE.
10. ALL PENETRATIONS THROUGH BENCHTOPS SHALL BE SEALED WITH CHEMICAL RESISTANT SEALANT.
11. BACKS OF COUNTERTOPS AND SPLASHES AGAINST WALLS SHALL BE SEALED TO THE WALL WITH SEALANT.
12. OWNER'S REPRESENTATIVE WILL SELECT COLORS OF LAB FURNISHINGS FROM THE CASEWORK MANUFACTURER'S STANDARD COLOR LINE.
13. ALL LABORATORY FURNISHING SHALL BE SEISMICALLY BRACED AS REQUIRED BY THE CALIFORNIA BUILDING CODE.
14. EMERGENCY SHOWER/EYEWASH UNITS SHALL COMPLY WITH ANSI STANDARDS FOR USABILITY BY THE PHYSICALLY DISABLED. SAFETY SHOWER/EYEWASH UNITS SHALL BE FURNISHED UNDER DIVISION 11 FOR INSTALLATION UNDER DIVISION 22.
15. FOR LABORATORY SERVICE FITTING TYPES, LOCATIONS AND ORDER, SEE LABORATORY FURNISHING PLANS. THESE FITTINGS SHALL BE PROVIDED UNDER DIVISION 11, FOR INSTALLATION UNDER DIVISION 22.
16. LOCATION OF EQUIPMENT, SUCH AS FUME HOODS, BRACES OR ANY OTHER ITEMS THAT MAY INTERFERE WITH LIGHTING, STRUCTURAL OR MECHANICAL SYSTEMS, SHALL BE CAREFULLY COORDINATED.
17. UNLESS OTHERWISE NOTED, ALL MISCELLANEOUS CHANNELS, BRACKETS AND FITTINGS INDICATED ON ALL LABORATORY FURNISHINGS DRAWINGS SHALL BE SUPPLIED, INSTALLED AND PAINTED UNDER DIVISION 11.
18. ALL BULLETIN BOARDS, MARKER BOARDS, TACKBOARDS, CHALKBOARDS, FLAT PANEL MONITORS, COAT RACKS AND FIRE EXTIGUISHERS TO COMPLY WITH DISTRICT STANDARDS. SEE ARCHITECTURAL DRAWINGS.
19. ALL WALL MOUNTED ELEC RACEWAYS SHALL BE MOUNTED AT + 41" A.F.F. TO BOTTOM OF RACEWAY U.O.N.
20. ALL FUME HOODS SHALL HAVE FACTORY PRE-WIRED ELECTRICAL (FOR LIGHTING AND RECEPTACLES) TO J-BOX ON TOP OF FUME HOOD BY LF CONTRACTOR
21. ALL FUME HOODS ARE TO HAVE PAINTED METAL CEILING ENCLOSURES FROM TOP OF HOOD TO CEILING.

LABORATORY FURNISHINGS DRAWING INDEX

SHEET NO	SHEET NAME	07/25/2022 DESIGN DEVELOPMENT	02/08/2023 50% CONSTRUCTION DOCUMENTS	03/13/2023 90% CONSTRUCTION DOCUMENTS	04/05/2023 100% CONSTRUCTION DOCUMENTS	08/30/2023 DSA V2 SUBMITTAL	10/04/2023 DSA V3 SUBMITTAL		
LF-001	LAB FURNISHINGS / EQUIPMENT COVER SHEET, ABBREVIATIONS, GENERAL NOTES, FIXTURE TYPES, SCHEDULES AND TABLES	•	•	•	•	•	•		
LF-401	ENLARGED WINE LAB / LAB PREP FLOOR PLAN	•	•	•	•	•	•		
LF-501	INTERIOR ELEVATIONS	•	•	•	•	•	•		
LF-901	LAB DETAILS				•	•	•		
LF-902	LAB DETAILS				•	•	•		

LABORATORY CASEWORK SCHEDULE

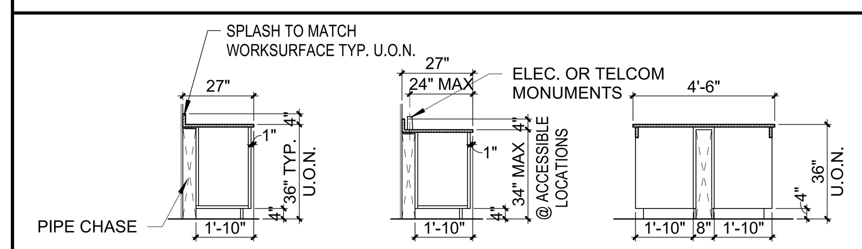

BASE CABINETS AND WORKSURFACE HEIGHT STANDARDS

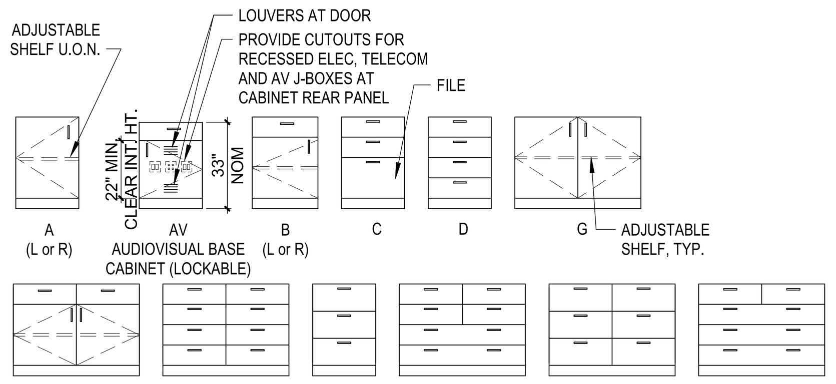

STORGE HEIGHT BASE CABINET TYPES

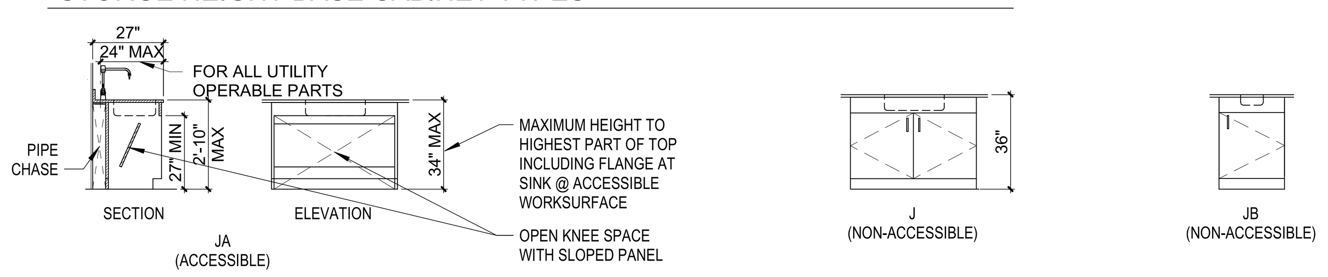

SINK BASE CABINET TYPES (SEE DETAILS 16/LF901 FOR ADDITIONAL INFORMATION)

#	HAZARDOUS MATERIALS STORAGE CABINET LABEL KEY
1	FLAMMABLES KEEP FIRE AWAY
2	ACIDS

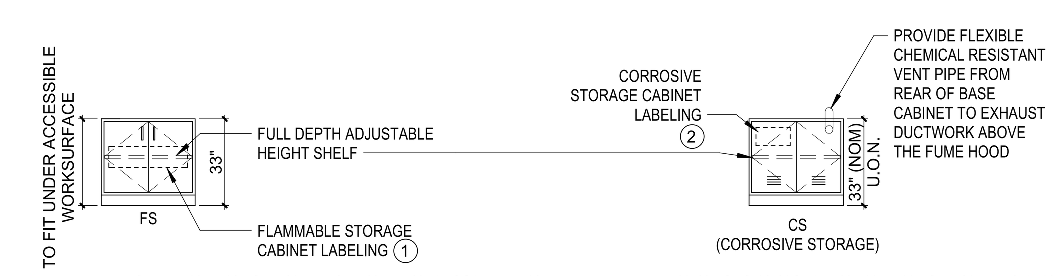

FLAMMABLE STORAGE BASE CABINETS

NOTE: FLAMMABLE STORAGE CABINETS ARE NOT TO BE VENTED

CORROSIVES STORAGE BASE CABINETS

NOTE: CORROSIVES STORAGE CABINETS ARE TO BE VENTED

BASE CABINETS (B)

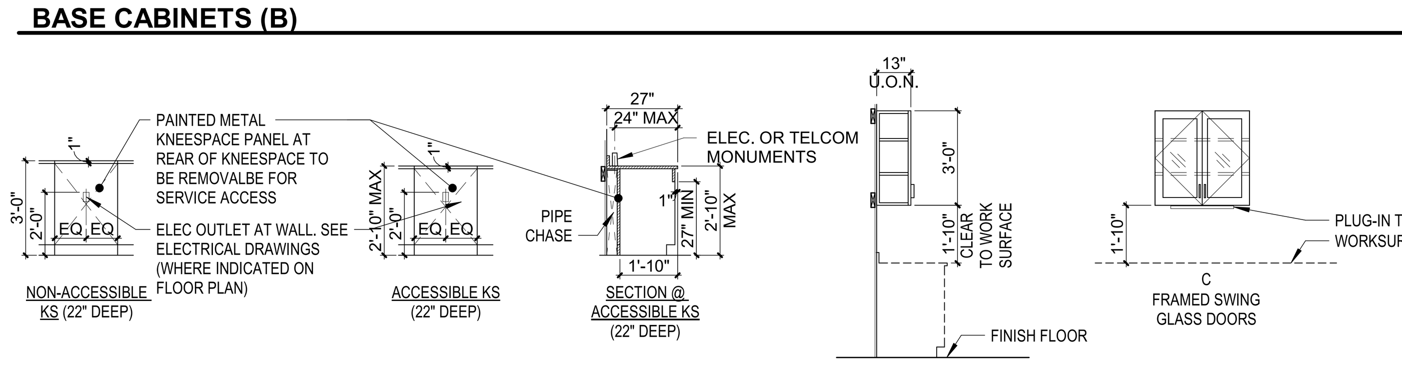

KNEE SPACES (KS)

WALL CABINETS (W)

- WALL CABINETS TO BE 13" DEEP AT WALL CONDITION, U.O.N.
- ALL INTERNAL SHELVES TO BE FULL DEPTH OF CABINET (WITHIN 3/4"), HEIGHT ADJUSTABLE AND REMOVABLE.
- CASEWORK TAG WITH (*) INDICATES LOCKABLE).

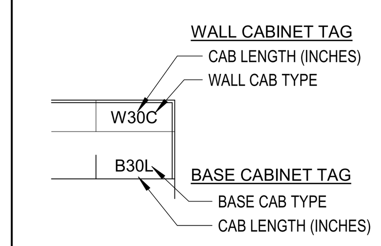

LAB PLAN LAB FURNISHINGS KEY LEGEND

PLUMBING FIXTURE SCHEDULE

NO.	DESCRIPTION	MANUFACTURER	MODEL NO.
P1	MIXING FAUCET DECK MTD. W/ VACUUM BREAKER, 8" GOOSENECK (WITH AERATOR AND BLADE HANDLES)	WATERSAVER FAUCET CO	L414VB-BH-8-WSA
P2	MIXING FAUCET DECK MTD. W/ VACUUM BREAKER, 8" GOOSENECK (WITH AERATOR AND 4 ARM HANDLES)	WATERSAVER FAUCET CO	L414VB-8-WSA
P2A	MIXING FAUCET DECK MTD. W/ VACUUM BREAKER, 8" GOOSENECK (WITH AERATOR AND BLADE HANDLES)	WATERSAVER FAUCET CO	L414VB-BH-8-WSA
P3	PURE WATER DECK MTD 8", GOOSENECK, W/ VACUUM BREAKER, MANUAL CONTROL (WITH AERATOR AND BLADE HANDLE)	WATERSAVER FAUCET CO	L691VB-BH-8-WSA
P4	SINGLE COLD WATER VALVE, DECK MTD. W/ VACUUM BREAKER, 6" GOOSENECK, 4 ARM HANDLE	WATERSAVER FAUCET CO	L611VB-6-WSA (180 DEGREE HANDLE CONFIGURATION)
P30	RECESSED FOLD-DOWN EMERGENCY SHOWER / EYE WASH UNIT WITH PLUMBED INTERNAL DRAIN	WATERSAVER FAUCET CO	SSBF 2150, OR EQUAL. PROVIDE WITH GUARDIAN AP250 D65 MODESTY CURTAIN ASSEMBLY
P31	EYEWASH, DECK MOUNTED AUTOFLOW, 90 DEGREE, SWING DOWN	WATERSAVER FAUCET CO	EW849-WSA
P32	EYEWASH, DECK MOUNTED AUTOFLOW, 90 DEGREE, SWING DOWN, BARRIER FREE	WATERSAVER FAUCET CO	EWBF849-WSA

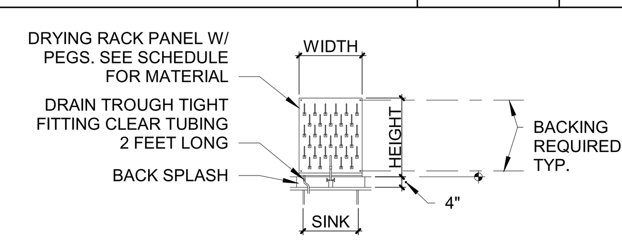

DRYING RACK ELEVATION

REFER TO DRYING RACK SCHEDULE

DRYING RACK SCHEDULE DR1 IS TYP. U.O.N.

NO.	WIDTH	HEIGHT	MATERIAL	COLOR/ PEG COLOR	DETAIL REFERENCE	NOTES
DR1	24"	30"	1" EPOXY	WHITE / WHITE	13 OR 18/LF-901	PROVIDE 2" WIDE x 3/4" DEEP SS DRAIN TROUGH WITH WELDED ENDS AND WELDED SS DRAIN TUBE. PROVIDE CLEAR PLASTIC DRIP HOSE FROM DRAIN TUBE INTO SINK. DRAIN TUBE TO BE ON SIDE OF DRAIN TROUGH WHICH IS CLOSEST TO THE SINK.

FUME HOOD (FH) SCHEDULE

GENERAL NOTES:

1. ALL PROJECT FUME HOODS TO HAVE AN AIRFLOW MONITOR.
2. ALL FUME HOODS TO BE SEISMICALLY BRACED.
3. ALL FUME HOODS TO HAVE PAINTED METAL CEILING ENCLOSURES (REMOVABLE), U.O.N.
4. ALL FUME HOODS TO OPERATE AT MIN.100 FPM FACE VELOCITY WITH AN 18" SASH HEIGHT OPENING.
5. ACCESSIBLE FUME HOODS TO HAVE ALL CONTROLS MOUNTED NO HIGHER THAN 48" A.F.F.

HOOD DESIGNATION	SIZE / DESCRIPTION	QUANTITY / LOCATION	FACE VELOCITY (FPM)	CFM	STATIC PRESSURE (SP)	EXHAUST COLLAR SIZE	SASH TYPE	SASH OPENING (OPERATION/SETUP)	PANEL / TRACKS (SASH)	SERVICES (PREPIPED)	
6' ACFH	6' ACCESSIBLE	1 / LAB PREP 105	100	830	.25	11 15/16 O.D.	VERTICAL RISING	18"/28"	1	NONE	WORK SURFACE AT +34"

FUME HOOD PRE-WIRING REQUIREMENTS

FUME HOOD PRE-WIRING REQUIREMENTS
FUME HOODS SHALL BE PRE-WIRED TO AN ACCESSIBLE JUNCTION BOX AT THE TOP OF THE FUME HOOD

SINK SCHEDULE

GENERAL NOTES:

1. ALL DROP-IN EPOXY SINKS (EXCEPT THOSE AT FUME HOOD - SEE SCHEDULE) ARE TO BE INSTALLED SO TOP EDGE IS APPROX. 1/8" BELOW SURROUNDING WORKSURFACE UNLESS OTHERWISE NOTED. 34" MAX AFF IS HIGHEST POINT OF AN ACCESSIBLE WORKSURFACE INCLUDING SINK.

SINK NUMBER	INT. SIZE LXWXD(INCHES)	MATERIAL	MFG MODEL NUMBER	DESCRIPTION
SK-1	-	-	-	NOT USED
SK-2	14 X 18 X 10.5	STAINLESS STEEL	JUST USX-1618-16	UNDERMOUNT SINK
SK-1A	25 X 15 X 5/11	EPOXY	DURCON A56	ACCESSIBLE / DROP-IN TYPE SINK
SK-2A	18 X 15 X 5/11	EPOXY	DURCON A26	ACCESSIBLE / DROP-IN TYPE SINK
SK-3A	8.88 X 2.63 X 5.75	EPOXY	DURCON TS12	ROUND DROP-IN TYPE CUPSINK

ELECTRICAL FIXTURE SCHEDULE

NO.	DESCRIPTION FOR REFERENCE, NO MARKS ON PLANS	MODEL NO.
EL-1	DOUBLE SIDED QUAD-PLEX (EACH SIDE) ELECTRICAL POLISHED ALUMINUM BENCHTOP PEDESTAL	WATERSAVER E600WS
EL-2	SINGLE SIDED QUAD-PLEX ELECTRICAL POLISHED ALUMINUM BENCHTOP PEDESTAL	WATERSAVER E500WS
EL-3	SINGLE SIDED DUPLEX TELECOM POLISHED ALUMINUM BENCHTOP PEDESTAL	WATERSAVER E300WS

10/4/2023 12:45:18 PM

AGENCY APPROVAL STAMP:

IDENTIFICATION STAMP
DIV. OF THE STATE ARCHITECT
APP: 01-120890 INC:
REVIEWED FOR
SS ☑ FLS ☑ ACS ☑
DATE: 10/25/2023

TLCDARCHITECTURE
520 Third St. #250
Santa Rosa, CA 95401
o: 707.525.5600
f: 707.525.5616
tlcd.com

CONSULTANT:
GL Planning & Design | Stantec
300 MONTGOMERY STREET
SUITE 1200
SAN FRANCISCO
CA 94104
415-882-9500
www.stantec.com

STAMP:

LICENSED ARCHITECT — MARTIN H. GICKLHORN — NO. C 11934 — REN. 6/25 — STATE OF CALIFORNIA

REVISIONS:

No	Date	Description
	07/25/22	DESIGN DEVELOPMENT
	02/08/23	50% CONSTRUCTION DOCUMENTS
	03/13/23	90% CONSTRUCTION DOCUMENTS
	04/05/23	100% CONSTRUCTION DOCUMENTS
	08/30/23	DSA V2 SUBMITTAL
	10/04/23	DSA V3 SUBMITTAL

NAPA VALLEY COLLEGE WINE EDUCATION CENTER
2277 NAPA VALLEJO HWY
NAPA, CA 94558

NAPA VALLEY COLLEGE

DSA APPLICATION NUMBER:
01-120890

TLCD PROJECT NUMBER:
21062.00

DATE:
04/12/2023

© THESE DRAWINGS ARE INSTRUMENTS OF SERVICE AND ARE THE SOLE PROPERTY OF TLCD ARCHITECTURE. ANY USE WITHOUT WRITTEN CONSENT IS PROHIBITED.

LAB FURNISHINGS / EQUIPMENT COVER SHEET, ABBREVIATIONS, GENERAL NOTES, FIXTURE TYPES, SCHEDULES AND TABLES

LF-001

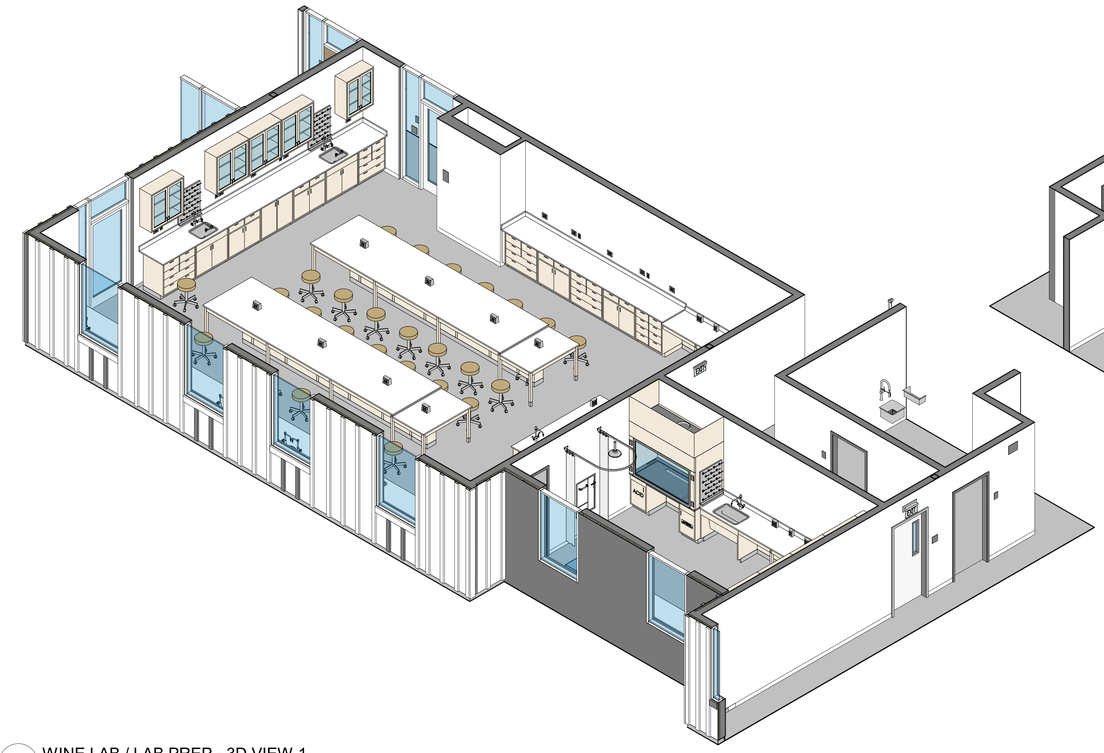

2 WINE LAB / LAB PREP - 3D VIEW 1

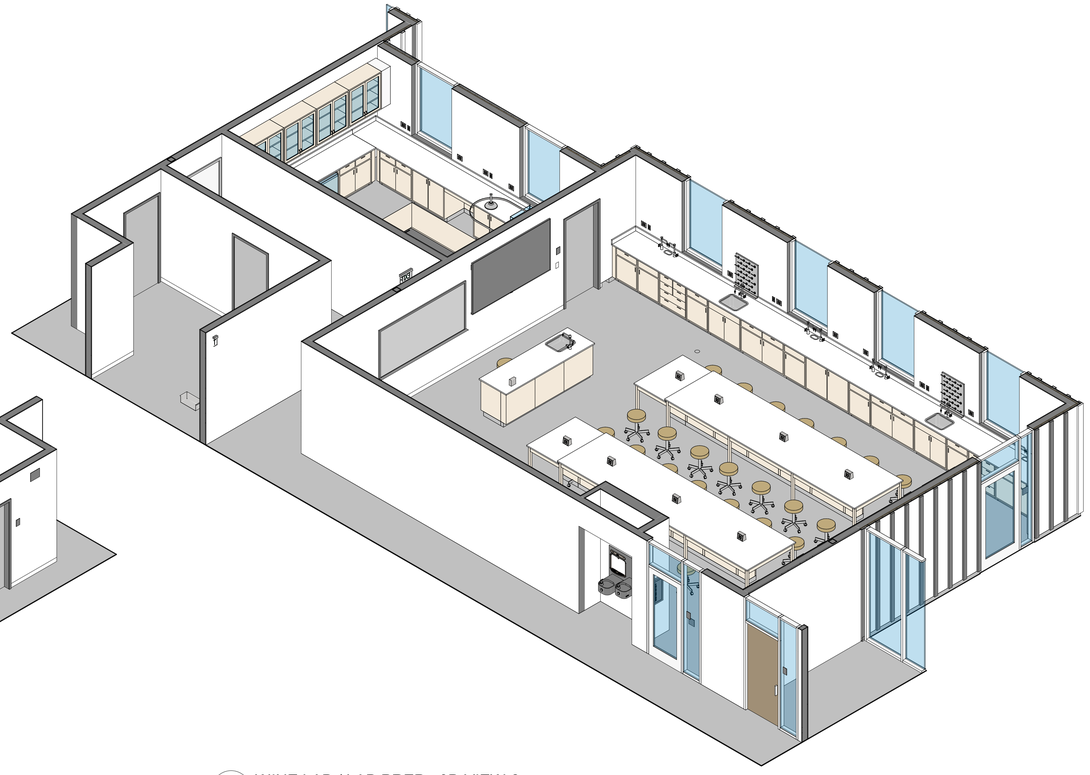

3 WINE LAB / LAB PREP - 3D VIEW 2

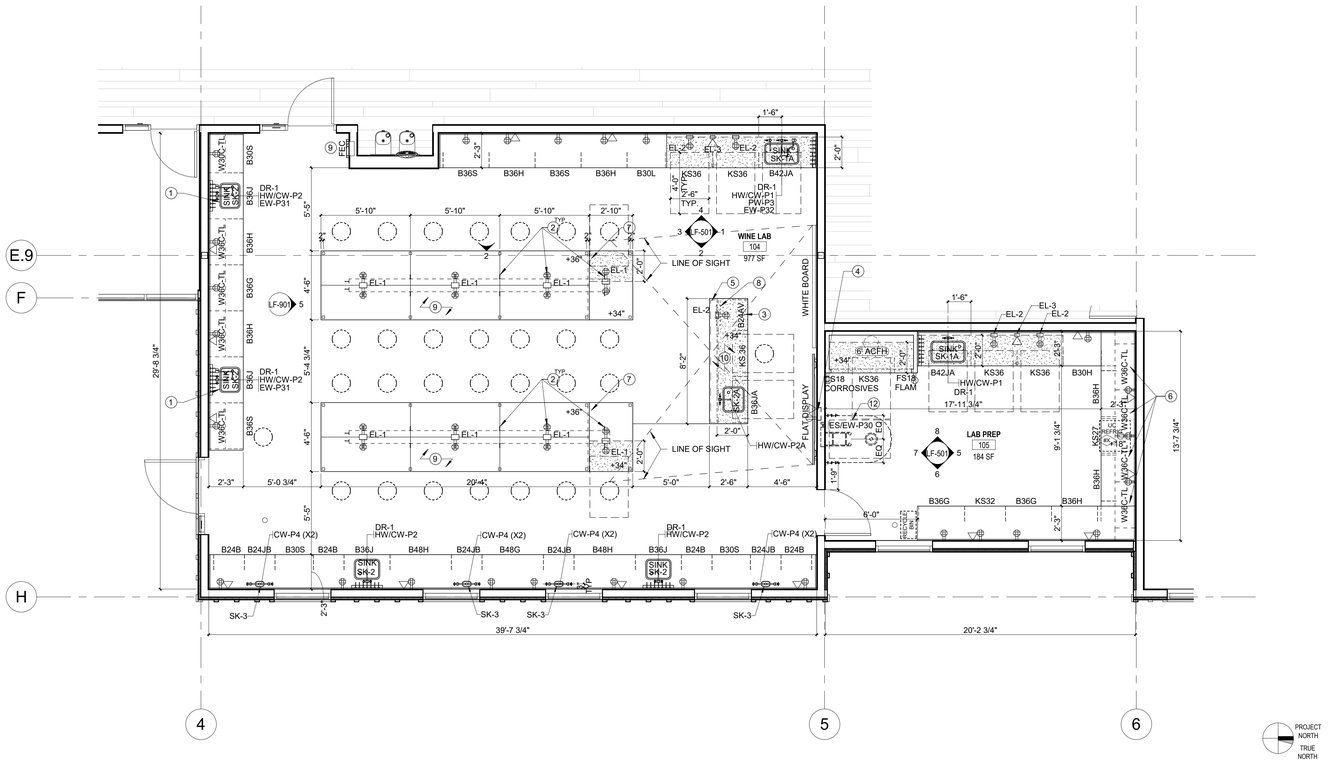

1 WINE LAB ENLARGED FLOOR PLAN
1/4" = 1'-0"

PROJECT NORTH
TRUE NORTH

GENERAL NOTES

ACCESSIBLE LAB WORKSURFACE HEIGHT OF +34" FROM FINISHED FLOOR (INDICATED ON FLOOR PLAN)

NUMBERED SHEET NOTES

1. THIS SINK IS TO HAVE A GARBAGE DISPOSAL, SEE PLUMBING DWGS.
2. BACKPACK HOOK IN KNEESPACE, TYP.
3. A/V CABINET WITH 110V ELEC, TELECOM & A/V WIRING. PROVIDE 110V ELEC FOUR-PLEX RECEPTACLE RECESSED INTO REAR PANEL OF BASE CABINET.
4. RECESSED BOX IN WALL BEHIND FLAT DISPLAY FOR 110V ELEC, TELECOM AND A/V WIRING, SEE ELEC AND AV DRAWINGS
5. 6" ENCLOSED CHASE SPACE BELOW COUNTERTOP
6. WALL CABINETS ON THIS WALL ARE TO BE 16" DEEP (FRONT TO BACK) X 36" TALL WITH ONE ADJUSTABLE SHELF. WALL CABINETS WILL BE USED FOR MICROSCOPE STORAGE
7. 1" THICK EPOXY SPLASH ORIENTED VERTICALLY TO CLOSE OFF SPACE BETWEEN 34" AND 36" HIGH WORKSURFACES. SEAL LIQUID-TIGHT TO BOTH WORKSURFACES WITH CHEMICAL RESISTANT SEALANT
8. FOUR-PLEX OUTLET RECESSED IN REAR PANEL OF AV BASE CABINET
9. FIRE EXTINGUISHER CABINET, SEE ARCH. DWGS.
10. LAB ISLAND BENCH, SEE 1/LF901
11. INSTRUCTOR BENCH, SEE 4/LF901
12. EMERGENCY SHOWER EYEWASH AND SHOWER CURTAIN, SEE 1/LF-902

AGENCY APPROVAL STAMP:

IDENTIFICATION STAMP
DIV. OF THE STATE ARCHITECT
APP: 01-120890 INC:
REVIEWED FOR
SS ☑ FLS ☑ ACS ☑
DATE: 10/25/2023

TLCDARCHITECTURE
520 Third St. #250
Santa Rosa, CA 95401
o: 707.525.5600
f: 707.525.5616
tlcd.com

CONSULTANT:
GL Planning & Design | Stantec
300 MONTGOMERY STREET
SUITE 1200
SAN FRANCISCO
CA 94104
415-882-9500
www.stantec.com

STAMP:

LICENSED ARCHITECT
MARK H. GICKLHORN
NO. C 11934
REN: 5/23
STATE OF CALIFORNIA

REVISIONS:

No	Date	Description
	07/25/22	DESIGN DEVELOPMENT
	02/08/23	50% CONSTRUCTION DOCUMENTS
	03/13/23	90% CONSTRUCTION DOCUMENTS
	04/05/23	100% CONSTRUCTION DOCUMENTS
	08/30/23	DSA V2 SUBMITTAL
	10/04/23	DSA V3 SUBMITTAL

NAPA VALLEY COLLEGE WINE EDUCATION CENTER

2277 NAPA VALLEJO HWY NAPA, CA 94558

NAPA VALLEY COLLEGE

DSA APPLICATION NUMBER:
01-120890

TLCD PROJECT NUMBER:
21062.00

DATE:
04/12/2023

ENLARGED WINE LAB / LAB PREP FLOOR PLAN

LF-401

© THESE DRAWINGS ARE INSTRUMENTS OF SERVICE AND ARE THE SOLE PROPERTY OF TLCD ARCHITECTURE. ANY USE WITHOUT WRITTEN CONSENT IS PROHIBITED.

10/4/2023 12:45:26 PM

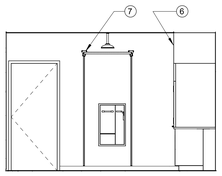

7 LAB PREP 105 - SOUTH ELEVATION
1/4" = 1'-0"

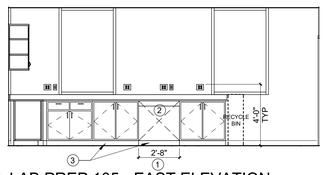

6 LAB PREP 105 - EAST ELEVATION
1/4" = 1'-0"

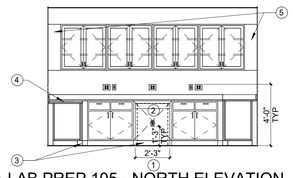

5 LAB PREP 105 - NORTH ELEVATION
1/4" = 1'-0"

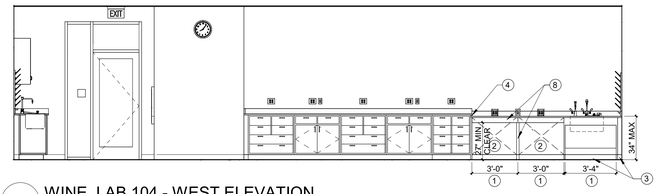

4 WINE LAB 104 - WEST ELEVATION
1/4" = 1'-0"

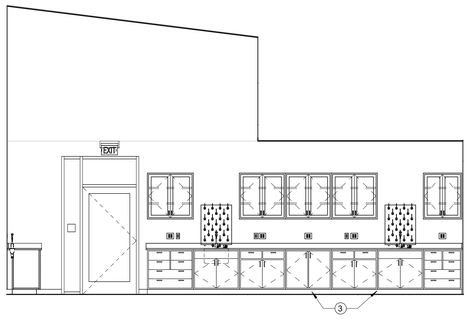

3 WINE LAB 104 - SOUTH ELEVATION
1/4" = 1'-0"

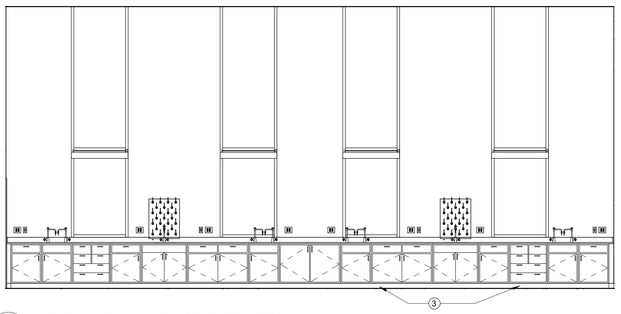

2 WINE LAB 104 - EAST ELEVATION
1/4" = 1'-0"

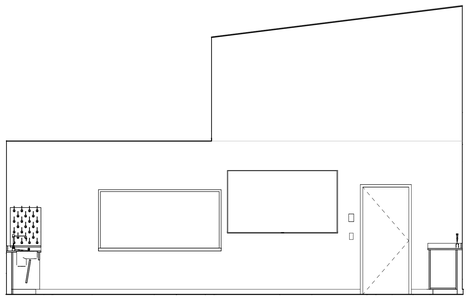

1 WINE LAB 104 - NORTH ELEVATION
1/4" = 1'-0"

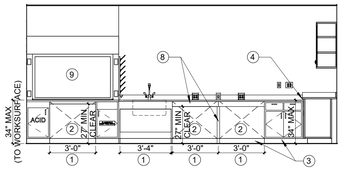

8 LAB PREP 105 - WEST ELEVATION
1/4" = 1'-0"

GENERAL NOTES

NUMBERED SHEET NOTES

1. 30" MIN CLEAR. SEE PLAN FOR SPACE WIDTH
2. REAR KNEE SPACE CLOSURE PANEL TO BE REMOVABLE FOR SERVICE ACCESS
3. RESILIENT BASE AROUND ALL EXPOSED CABINET BASE, TYP.
4. 1" EPOXY SPLASH BETWEEN HIGHER AND LOWER BENCHTOPS
5. CLOSURE PANELS, TYP.
6. FUME HOOD CEILING ENCLOSURE
7. RETRACTABLE SHOWER MODESTY CURTAIN AND OVERHEAD CURVED SUPPORT BRACKET
8. SUPPORT LEG AND APRON BETWEEN KNEE SPACES, TYP.
9. FUME HOOD, SEE DETAIL 3/LF-902.

AGENCY APPROVAL STAMP:

IDENTIFICATION STAMP
DIV. OF THE STATE ARCHITECT
APP: 01-120890 INC:
REVIEWED FOR
SS ☑ FLS ☑ ACS ☑
DATE: 10/25/2023

TLCDARCHITECTURE
520 Third St. #250
Santa Rosa, CA 95401
o: 707.525.5600
f: 707.525.5616
tlcd.com

CONSULTANT:

GL Planning & Design | Stantec
300 MONTGOMERY STREET
SUITE 1200
SAN FRANCISCO
CA 94104
415-882-9500
www.stantec.com

STAMP:

LICENSED ARCHITECT
MARK H. GICKLHORN
NO. C 11934
REN: 5/25
STATE OF CALIFORNIA

REVISIONS:

No	Date	Description
	07/25/22	DESIGN DEVELOPMENT
	02/08/23	50% CONSTRUCTION DOCUMENTS
	03/13/23	90% CONSTRUCTION DOCUMENTS
	04/05/23	100% CONSTRUCTION DOCUMENTS
	08/30/23	DSA V2 SUBMITTAL
	10/04/23	DSA V3 SUBMITTAL

NAPA VALLEY COLLEGE WINE EDUCATION CENTER

2277 NAPA VALLEJO HWY
NAPA, CA 94558

NAPA VALLEY COLLEGE

DSA APPLICATION NUMBER:
01-120890

TLCD PROJECT NUMBER:
21062.00

DATE:
04/12/2023

INTERIOR ELEVATIONS

LF-501

© THESE DRAWINGS ARE INSTRUMENTS OF SERVICE AND ARE THE SOLE PROPERTY OF TLCD ARCHITECTURE. ANY USE WITHOUT WRITTEN CONSENT IS PROHIBITED

10/4/2023 12:45:26 PM

GENERAL NOTES

ACCESSIBLE LAB WORKSURFACE AREA

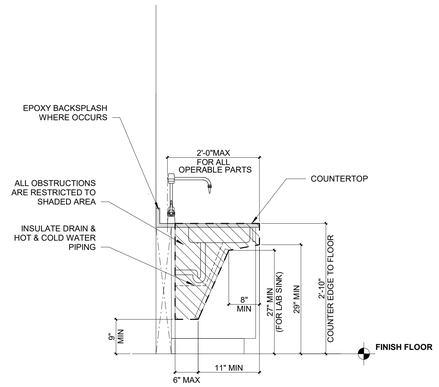

19 ACCESSIBLE SINK CLEARANCE DIAGRAM
3/4" = 1'-0"

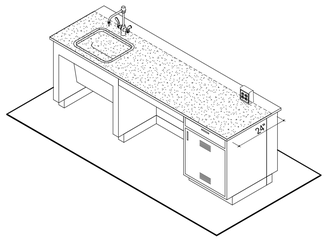

15 3D - INSTRUCTOR BENCH

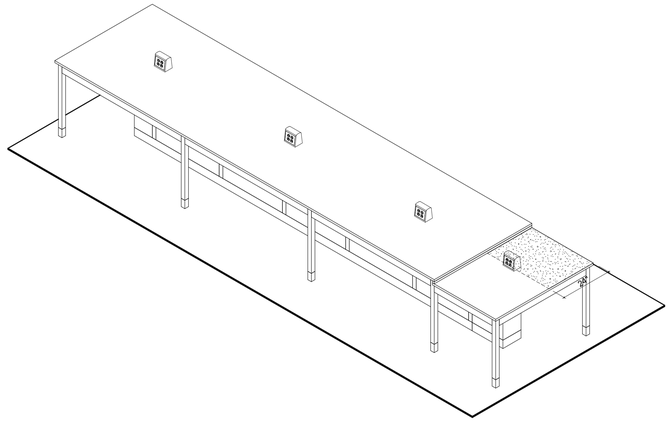

11 3D - TYPICAL LAB ISLAND BENCH

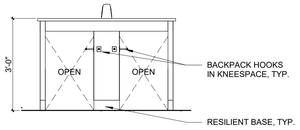

5 TYPICAL LAB ISLAND BENCH - ELEVATION AT NON-ACCESSIBLE END
1/2" = 1'-0"

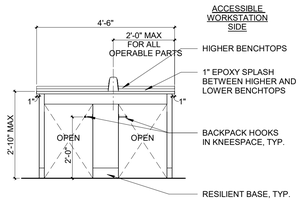

4 TYPICAL LAB ISLAND BENCH - ELEVATION AT ACCESSIBLE END
1/2" = 1'-0"

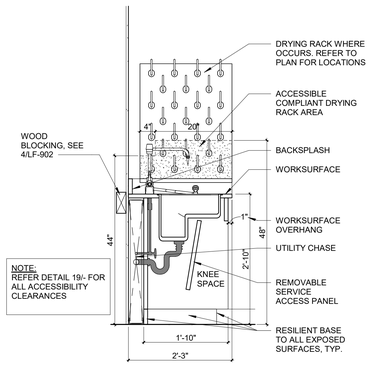

18 TYP ACCESSIBLE SINK AT WALL CONDITION - SECTION
3/4" = 1'-0"

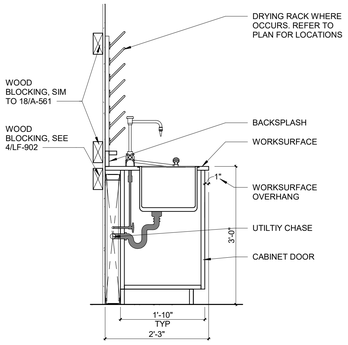

14 TYP NON-ACCESSIBLE SINK AT WALL CONDITION - SECTION
3/4" = 1'-0"

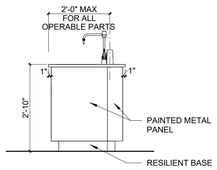

10 INSTRUCTOR BENCH - TYP. END ELEVATION
1/2" = 1'-0"

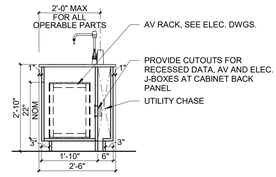

9 INSTRUCTOR BENCH - SECTION
1/2" = 1'-0"

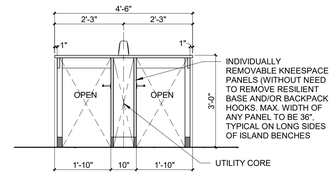

3 TYPICAL LAB ISLAND BENCH - SECTION
1/2" = 1'-0"

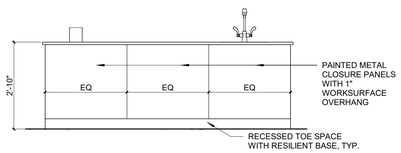

8 INSTRUCTOR BENCH - FRONT ELEVATION
1/2" = 1'-0"

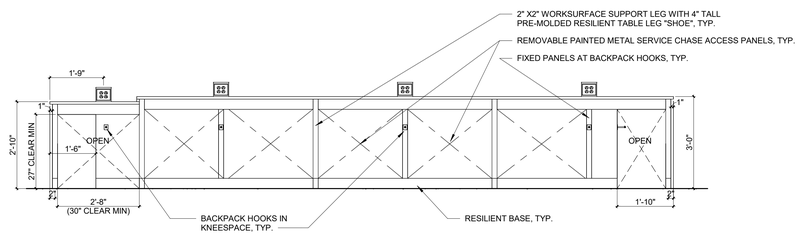

2 TYPICAL LAB ISLAND BENCH - ELEVATION (WEST ISLAND BENCH DRAWN, EAST ISLAND BENCH IS OPPOSITE HAND)
1/2" = 1'-0"

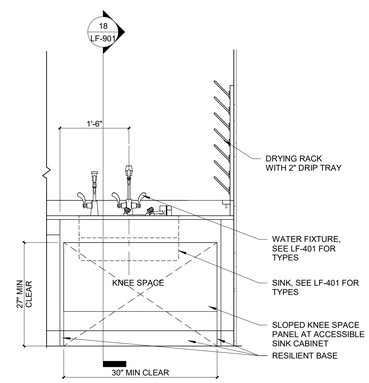

17 TYP ACCESSIBLE SINK AT WALL CONDITION - ELEVATION
3/4" = 1'-0"

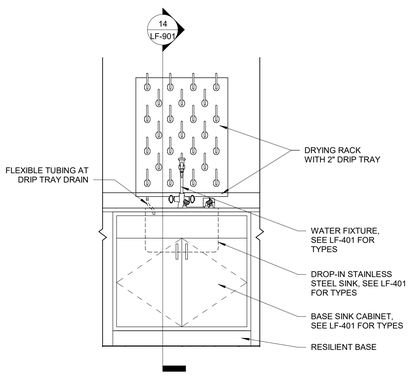

13 TYP NON-ACCESSIBLE SINK AT WALL CONDITION - ELEVATION
3/4" = 1'-0"

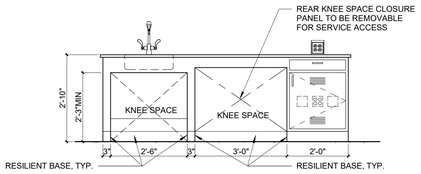

7 INSTRUCTOR BENCH - BACK ELEVATION
1/2" = 1'-0"

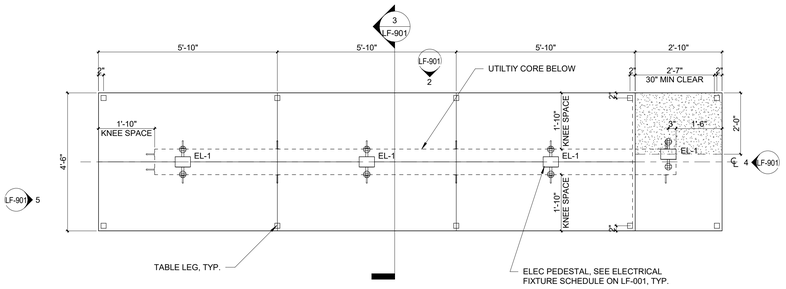

1 TYPICAL LAB ISLAND BENCH - PLAN (WEST ISLAND BENCH DRAWN, EAST ISLAND BENCH IS OPPOSITE HAND)
1/2" = 1'-0"

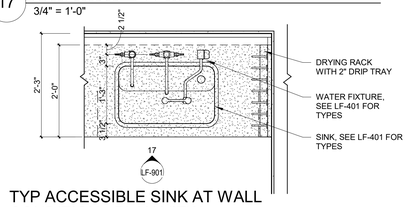

16 TYP ACCESSIBLE SINK AT WALL CONDITION - PLAN VIEW
3/4" = 1'-0"

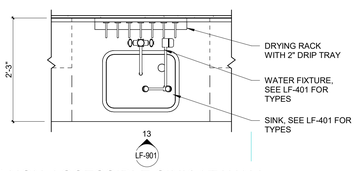

12 TYP NON-ACCESSIBLE SINK AT WALL CONDITION - PLAN VIEW
3/4" = 1'-0"

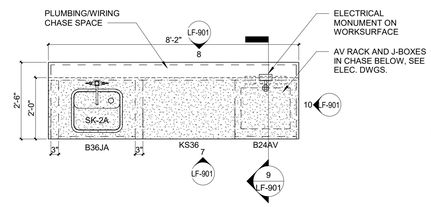

6 INSTRUCTOR BENCH - PLAN
1/2" = 1'-0"

10/4/2023 12:45:29 PM

AGENCY APPROVAL STAMP:

IDENTIFICATION STAMP
DIV. OF THE STATE ARCHITECT
APP: 01-120890 INC:
REVIEWED FOR
SS ☑ FLS ☑ ACS ☑
DATE: 10/25/2023

TLCDARCHITECTURE
520 Third St. #250
Santa Rosa, CA 95401
o: 707.525.5600
f: 707.525.5616
tlcd.com

CONSULTANT:
GL Planning & Design | Stantec
300 MONTGOMERY STREET
SUITE 1200
SAN FRANCISCO
CA 94104
415-882-9500
www.stantec.com

STAMP:

LICENSED ARCHITECT
MARK H. GICKNOW
NO. C 11934
REN. 5/25
STATE OF CALIFORNIA

REVISIONS:

No	Date	Description
	04/05/23	100% CONSTRUCTION DOCUMENTS
	08/30/23	DSA V2 SUBMITTAL
	10/04/23	DSA V3 SUBMITTAL

NAPA VALLEY COLLEGE WINE EDUCATION CENTER
2277 NAPA VALLEJO HWY
NAPA, CA 94558

NAPA VALLEY COLLEGE

DSA APPLICATION NUMBER:
01-120890

TLCD PROJECT NUMBER:
21062.00

DATE:
04/12/2023

LAB DETAILS

LF-901

© THESE DRAWINGS ARE INSTRUMENTS OF SERVICE AND ARE THE SOLE PROPERTY OF TLCD ARCHITECTURE. ANY USE WITHOUT WRITTEN CONSENT IS PROHIBITED

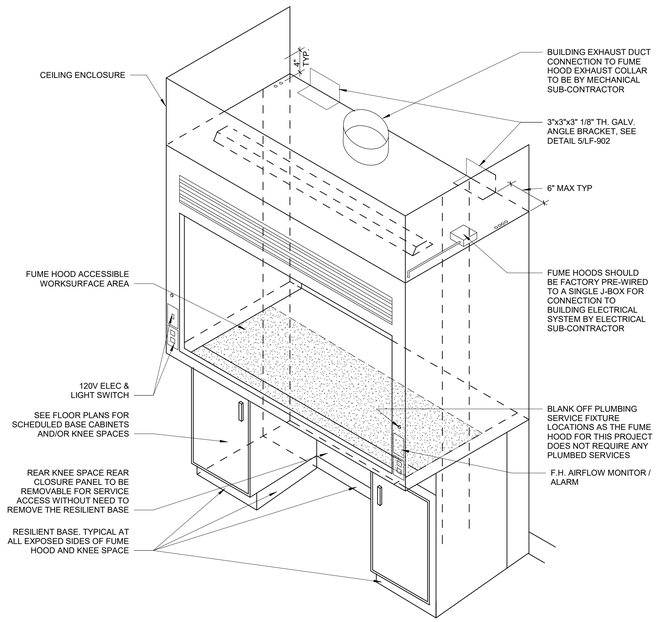

6 TYP. ACCESSIBLE FUME HOOD ISOMETRIC
3/4" = 1'-0"

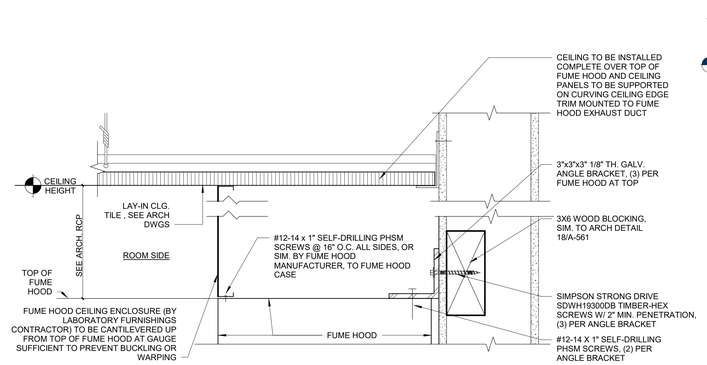

5 FUME HOOD CEILING ENCLOSURE
3" = 1'-0"

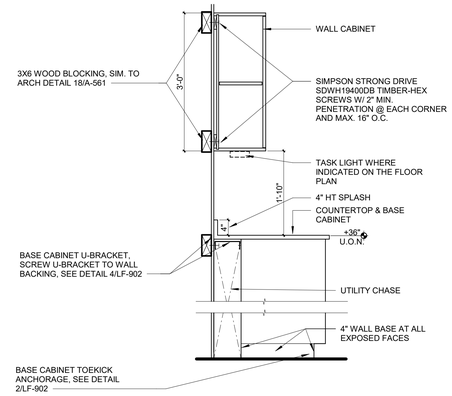

7 TYPICAL SECTION AT WALL CABINET
3/4" = 1'-0"

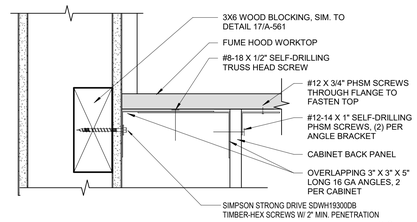

8 FUME HOOD BASE CABINET UPPER ANCHORAGE DETAIL
3" = 1'-0"
(NOTE: FUME HOOD BASE CABINET TOEKICK ANCHORAGE DETAIL SIM. TO 2/LF-902)

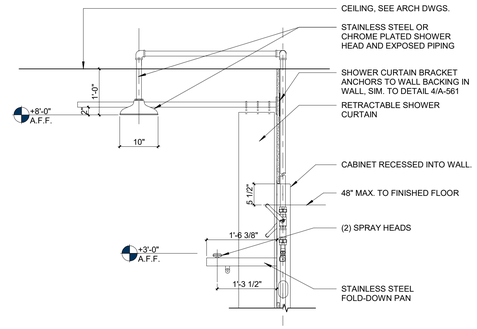

C - SECTION

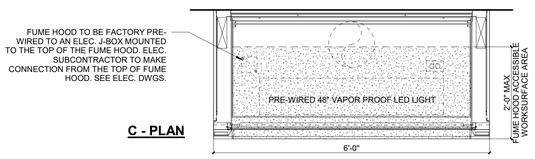

C - PLAN

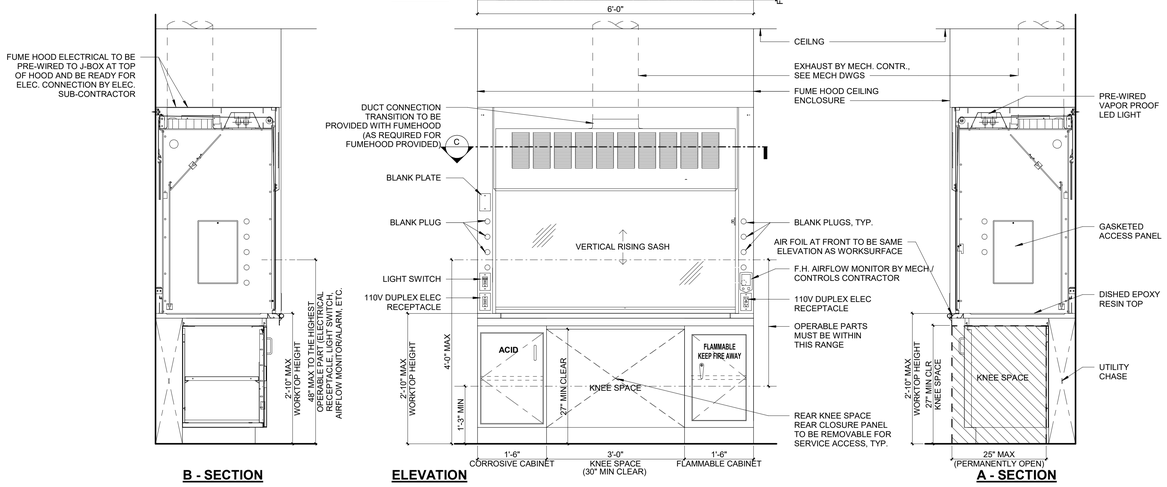

3 TYPICAL 6' ACCESSIBLE FUME HOOD
3/4" = 1'-0"

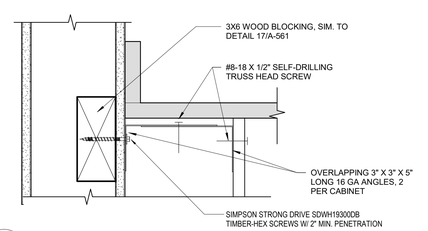

4 BASE CABINET UPPER ANCHORAGE DETAIL
3" = 1'-0"

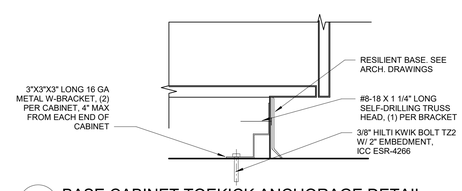

2 BASE CABINET TOEKICK ANCHORAGE DETAIL
3" = 1'-0"

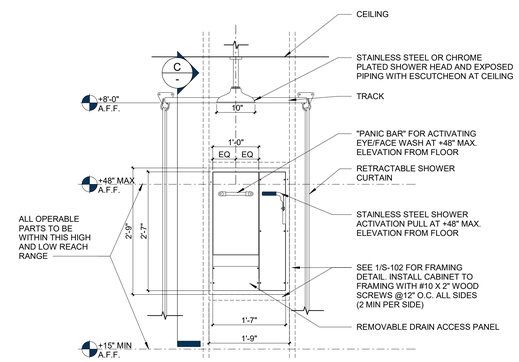

B- ELEVATION

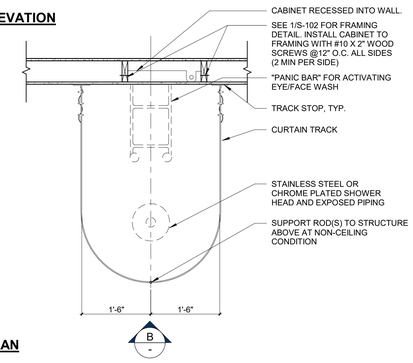

A - PLAN

1 EMERGENCY SHOWER EYEWASH (ES/EW) DEVICE
3/4" = 1'-0"

AGENCY APPROVAL STAMP:

IDENTIFICATION STAMP
DIV. OF THE STATE ARCHITECT
APP: 01-120890 INC:
REVIEWED FOR
SS ☑ FLS ☑ ACS ☑
DATE: 10/25/2023

TLCDARCHITECTURE
520 Third St. #250
Santa Rosa, CA 95401
o: 707.525.5600
f: 707.525.5616
tlcd.com

CONSULTANT:
GL Planning & Design | Stantec
300 MONTGOMERY STREET
SUITE 1200
SAN FRANCISCO
CA 94104
415-882-9500
www.stantec.com

STAMP:

LICENSED ARCHITECT
MARK H. GICKLHORN
NO. C 11934
REN. 5/25
STATE OF CALIFORNIA

REVISIONS:

No	Date	Description
	04/05/23	100% CONSTRUCTION DOCUMENTS
	08/30/23	DSA V2 SUBMITTAL
	10/04/23	DSA V3 SUBMITTAL

NAPA VALLEY COLLEGE WINE EDUCATION CENTER

2277 NAPA VALLEJO HWY
NAPA, CA 94558

NAPA VALLEY COLLEGE

DSA APPLICATION NUMBER:
01-120890

TLCD PROJECT NUMBER:
21062.00

DATE:
04/12/2023

LAB DETAILS

LF-902

© THESE DRAWINGS ARE INSTRUMENTS OF SERVICE AND ARE THE SOLE PROPERTY OF TLCD ARCHITECTURE. ANY USE WITHOUT WRITTEN CONSENT IS PROHIBITED

10/4/2023 12:45:30 PM